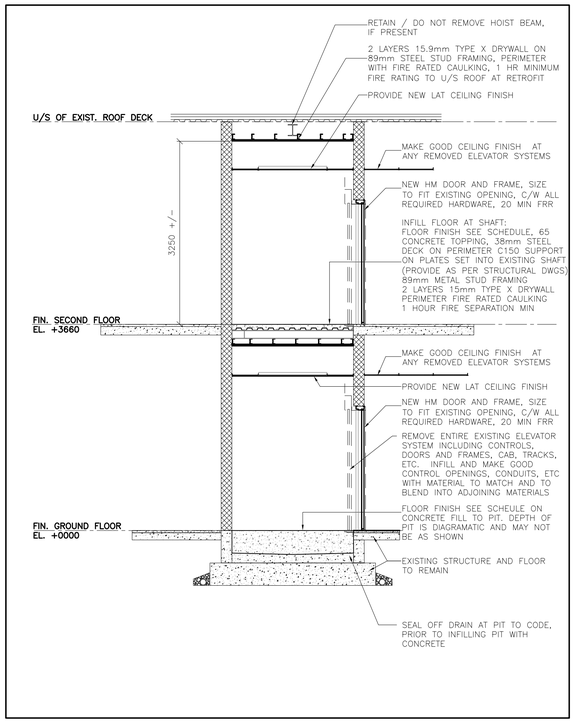

EXISTING ELEVATOR SHAFT WORK

SCALE 1:50 (6 / A2)

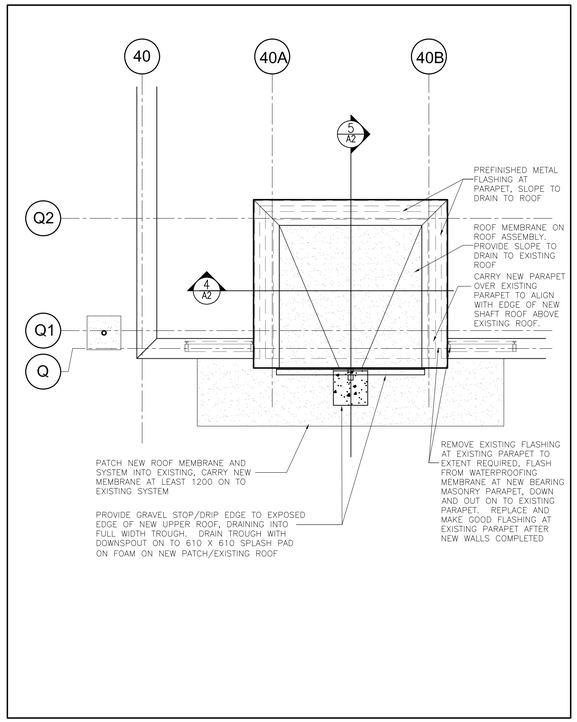

ROOF PLAN

SCALE 1:50 (3 / A2)

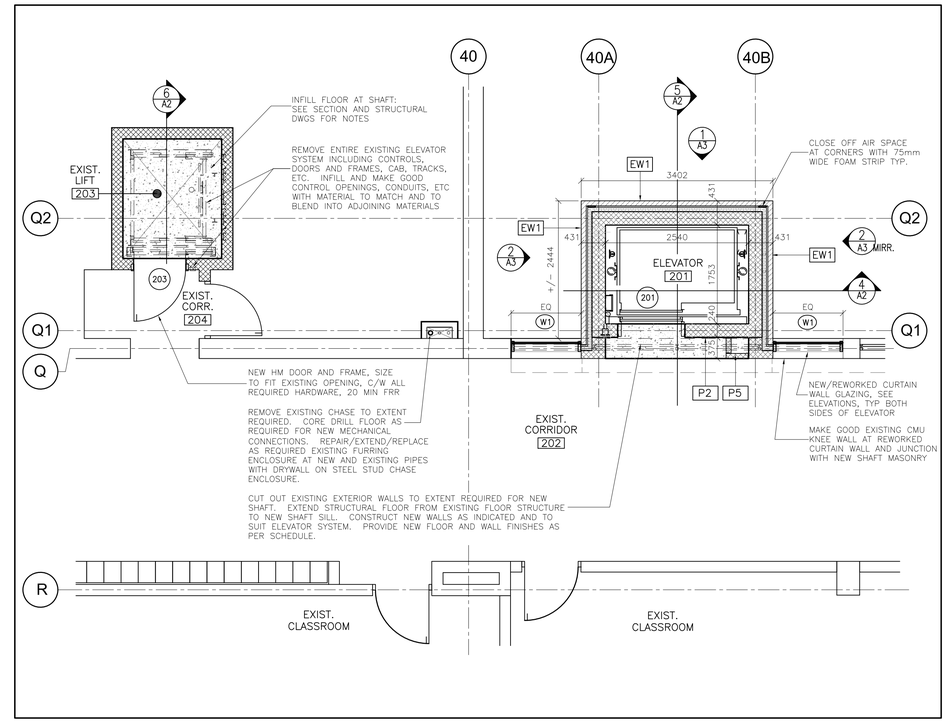

ELEVATOR @ SECOND FLOOR

SCALE 1:50 (2 / A2)

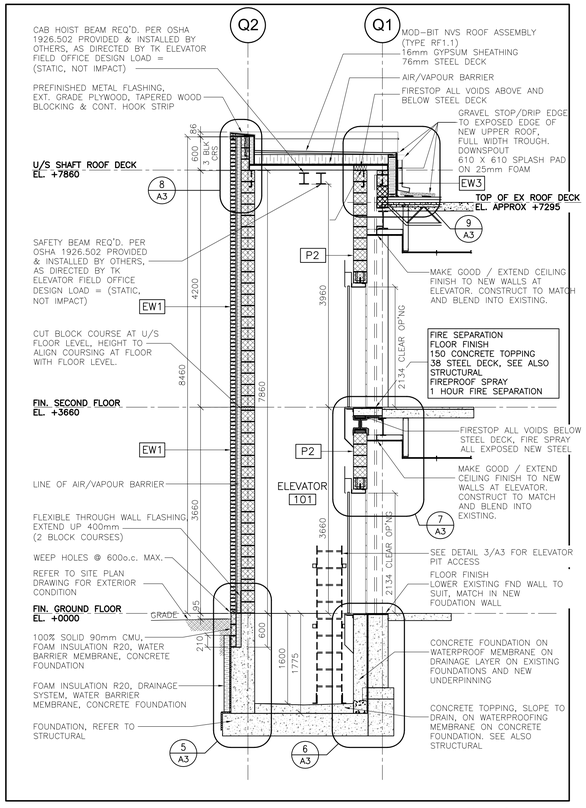

SECTION

SCALE 1:50 (5 / A2)

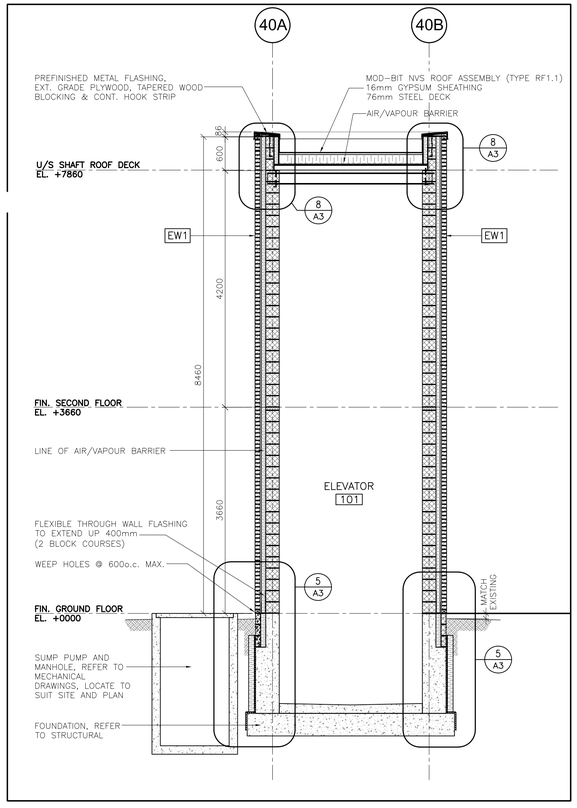

SECTION

SCALE 1:50 (4 / A2)

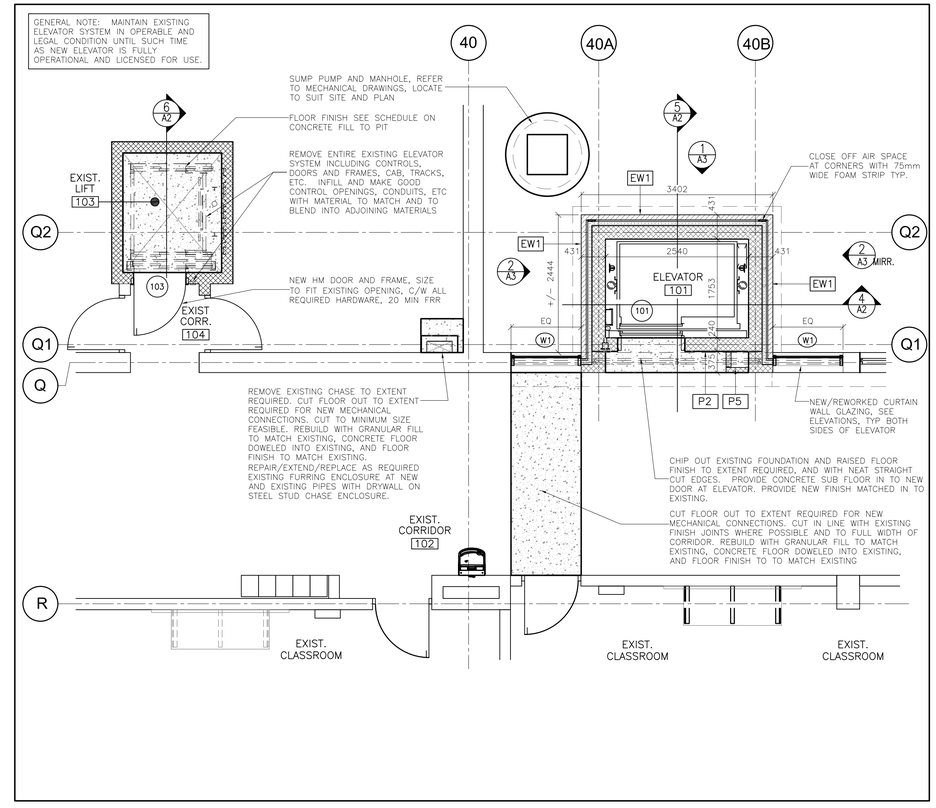

ELEVATOR @ GROUND FLOOR

SCALE 1:50 (1 / A2)

No.	DD/MM/YY	DESCRIPTION
1.	12/05/26	ISSUED FOR BUILDING PERMIT/TENDER

REVISIONS

ONTARIO ASSOCIATION OF ARCHITECTS — ANTHONY M. SVEDAS — LICENCE 3294

Hamilton-Wentworth Catholic District School Board
Believing, Achieving, Serving

SVEDAS / ARCHITECTS INC.

3600 BILLINGS COURT, SUITE 100
BURLINGTON, ONTARIO L7N 3N6
TEL. (905) 308-7771

ELEVATOR FOR ST. JEAN DE BREBEUF CATHOLIC SECONDARY SCHOOL

200 ACADIA DRIVE
HAMILTON ONTARIO

GROUND & SECOND FLOOR ELEVTOR PLANS & ELEVATOR SECTIONS

SCALE	DRAWN	PROJECT No.
AS NOTED		125804
DATE	CHECKED	DRAWING No.
MAY 22, 2026	MM	A2

FILENAME: G:\Work\125806 St. Jean de Brebeuf Elevator Addition\WORK\125806-SdB-A2 to A3 Floor Plans and Sections_20260521.dwg
PLOTDATE: May 23, 2026 - 7:52pm

ARCH D 24X36