WALL SCHEDULE

WALL SCHEDULE NOTES:

1) THIS SHEET IS TO BE READ IN CONJUNCTION WITH ALL OTHER SHEETS TO GIVE THE COMPLETE SCOPE OF WORK.
2) REPORT ANY DISCREPANCIES BETWEEN THE NOTED CONSTRUCTION & WALL SECTIONS WITH ARCHITECT PRIOR TO CONSTRUCTION START.
3) PROVIDE SHOP DRAWINGS c/w ENGINEER STAMP FOR STRUCTURAL STEEL STUDS & CONNECTION DETAILS.
4) ALL PARTITION WALLS AROUND OFFICES ARE TO BE FILLED WITH ACOUSTIC BLANKET BATT INSULATION.
5) REFER TO STRUCTURAL DRAWINGS FOR WALL FRAMING SCHEDULE.

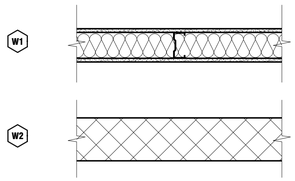

TYPICAL STUD WALL:
13mm GYPSUM BOARD, PAINTED
92mm METAL STUDS @ 400mm O.C.
C/W BATT INSULATION
13mm GYPSUM BOARD, PAINTED.

MASONRY WALL INFILL:
CONCRETE MASONRY UNIT TO MATCH EXISTING, PAINTED.

ENSURE ALL PENETRATIONS THROUGH FIRE SEPARATIONS ARE PROPERLY FIRE STOPPED IN CONFORMANCE WITH 3.1.9.

EMERGENCY LIGHTING SHALL BE PROVIDED FOR MIN ½ HR TO AN AVERAGE LEVEL OF AT LEAST 10lx IN AREAS REQUIRED BY 3.2.7.3.(1)

COMBUSTIBLE PIPING IS PERMITTED TO BE USED IN A BUILDING REQUIRED TO BE OF NON-COMBUSTIBLE CONSTRUCTION PROVIDED IT HAS A FLAME SPREAD RATING NOT MORE THAN 25

ALL MATERIALS IN A CONCEALED SPACE USED AS RETURN AIR PLENUM MUST HAVE A FLAME SPREAD RATING OF NOT MORE THAN 25 AND A SMOKE DEVELOPED CLASSIFICATION NOT MORE THAN 50

A 3'-7" (1,100mm) BARRIER-FREE PATH OF TRAVEL IS REQUIRED THROUGHOUT FLOOR AREA

AS PER 3.8.3.3.(3), DOOR OPENING DEVICES THAT ARE THE ONLY MEANS OF OPERATION SHALL BE DESIGNED TO BE OPERABLE USING A CLOSED FIST, AND BE MOUNTED NOT LESS THAN 900MM AND NOT MORE THAN 1100MM ABOVE THE FINISHED FLOOR.

DOORS IN A REQUIRED BARRIER-FREE PATH OF TRAVEL SHALL BE MIN 850MM CLEAR WIDTH AND EQUIPPED WITH PUSH, PULL OR LEVER TYPE HANDLES

DOORS IN A BARRIER-FREE PATH OF TRAVEL REQUIRE A 600MM CLEAR SPACE ON LATCH SIDE WHERE DOOR SWINGS TOWARDS APPROACH SIDE AND 300MM CLEAR SPACE FOR ALL OTHER DOORS, OR A POWER DOOR OPERATOR IS REQUIRED

3.8.1.5. - CONTROLS FOR THE OPERATION OF BUILDING SERVICES SHALL BE WHEELCHAIR ACCESSIBLE USING A SIDE APPROACH, MOUNTED 1200MM ABOVE FINISHED FLOOR FOR THERMOSTATS OR MANUAL PULL STATIONS AND BETWEEN 900MM - 1100MM ABOVE FINISHED FLOOR FOR ALL OTHER CONTROLS

AS PER 3.8.3.3.(14), A VISION PANEL PROVIDED IN A DOOR IN A BARRIER-FREE PATH OF TRAVEL, SUCH PANEL SHALL BE AT LEAST 75MM IN WIDTH AND BE LOCATED SO THAT THE BOTTOM OF THE PANEL IS NOT MORE THAN 900MM ABOVE THE FINISHED FLOOR, AND THE EDGE OF THE PANEL CLOSEST TO THE LATCH IS NOT MORE THAN 250MM FROM THE LATCH SIDE OF THE DOOR.

GENERAL NOTES

1. ALL DIMENSIONS ARE TO THE FINISHED SURFACES UNLESS NOTED OTHERWISE.
2. DO NOT SCALE DRAWINGS – USE DIMENSIONS.
3. ALL CONSTRUCTION IS NEW UNLESS OTHERWISE NOTED.
4. CONTRACTOR MUST VERIFY ALL DIMENSIONS AND BE RESPONSIBLE FOR SAME. REPORT ANY ERRORS OR OMISSIONS TO THE ARCHITECT IN WRITING PRIOR TO COMMENCING WORK. PRINTS ARE NOT TO BE SCALED.
5. ALL CONSTRUCTION SHALL BE IN COMPLIANCE WITH CURRENT BUILDING CODE AND WITH ALL OTHER CODES, ORDINANCES AND REQUIREMENTS HAVING JURISDICTION.
6. ALL WORK RELATING TO THIS CONSTRUCTION SHALL COMPLY WITH THE PROVINCIAL MINISTRY OF LABOUR. THE OCCUPATIONAL HEALTH AND SAFETY STANDARDS AND ALL RELATED LOCAL BUILDING CODES AND ORDINANCES.
7. DRAWINGS ARE TO BE READ IN CONJUNCTION WITH ALL OTHER ARCHITECTURAL, MECHANICAL & ELECTRICAL DRAWINGS FOR A COMPLETE SCOPE OF WORK.
8. INFORMATION SHOWN HEREIN ARE BASED ON PREVIOUS RECORDS & DRAWINGS. THE ACCURACY OF THIS DATA HAS BEEN MODERATELY VERIFIED WITH FRAGMENTARY DIMENSIONS WHERE POSSIBLE.
9. PATTERNS OF HATCHING ARE GRAPHIC REPRESENTATIONS ONLY. THEY DO NOT REPRESENT TILE PLACEMENT OR COURSING.
10. IT IS THE GENERAL CONTRACTORS RESPONSIBILITY TO REMOVE, STORE & RELOCATE / REINSTALL ALL FIXED IN PLACE MILLWORK, EQUIPMENT ETC. IN AREAS OF WORK. THE GENERAL CONTRACTOR WILL PATCH, REPAIR OR REPLACE ANY DAMAGED ITEMS, UNDER HIS RESPONSIBILITY AS A CONSEQUENCE OF IMPROPER STORAGE OR HANDLING, AT HIS OWN EXPENSE. THE GENERAL CONTRACTOR SHALL CO-ORDINATE WITH THE SCHOOL BOARD WHEN THE ITEMS, UNDER HIS RESPONSIBILITY, SHALL BE REINSTALLED AT WHICH TIME AN INSPECTION FOR DAMAGE SHALL BE CONDUCTED BY THE SCHOOL BOARD.
11. CRACKING IN CONCRETE SLAB NOT RELATED TO TRANSITIONS OR SAWCUTTING ARE TO BE CLEANED OUT, INFILLED & LEVELED SMOOTH. GRIND SMOOTH, INFILL AND PATCH LOCATIONS OF SAWCUTS OR TRANSITION JOINTS & COLUMNS ISOLATION JOINTS TO MAKE TRANSITION IMPERCEPTIBLE IN PREPARATION OF INSTALLATION OF ALL NEW FLOORING. GENERAL CONTRACTOR TO SITE CONFIRM LOCATIONS.
12. LEVEL SLAB AREAS AFTER ANY REMOVALS WHICH MAY HAVE DIFFERENT ELEVATIONS.
13. WHERE FLOORING IS BEING REMOVED, GRIND SMOOTH EXISTING CONCRETE FLOOR SLAB TO REMOVE ANY REMNANT ADHESIVE, MORTAR ETC. & MAKE READY TO RECEIVE NEW FLOOR FINISHES.
14. ADJUST AS REQUIRED ALL DRAINS AND CLEAN-OUTS TO SUIT NEW FLOORING ELEVATION; NEATLY CUT FLOORING AROUND CLEAN-OUTS.
15. "MAKE GOOD" SHALL BE DEFINED AS: WHEN THE WORK IS COMPLETED ALL FINISHES, MATERIALS & SURFACES ARE TO RESEMBLE A NEW INSTALLATION, THIS WILL INCLUDE INFILLING, PATCHING & SANDING. THIS WILL BE APPLIED TO ALL AREAS WHERE DEMOLITION OR REMOVAL OCCURS & TO ANY SURFACES DAMAGED THROUGH THE COURSE OF CONSTRUCTION . PATCHING IS THE REPAIRING OF ALL MATERIALS, SURFACES & FINISHES WHICH SHALL MATCH THE ADJACENT FINISHES & COLOURS UNLESS OTHERWISE NOTED. WHERE RE-PAINTING IS REQUIRED, THE ENTIRE SURFACE PLAIN SHALL ALSO BE PAINTED.
16. ALL MECHANICAL & ELECTRICAL SERVICES RELATED TO EQUIPMENT, MILLWORK, REMOVALS, RELOCATIONS & DEMOLITIONS SHALL BE DISCONNECTED & CAPPED BENEATH THE FINISHED FLOOR LEVEL. MAKE GOOD ALL SLAB OPENINGS AS REQUIRED & MAKE READY TO ACCEPT NEW FINISHES. REFER TO MECHANICAL AND ELECTRICAL DRAWINGS FOR A COMPLETE SCOPE OF WORK.

DEMOLITION NOTES

1. SELECTIVE DEMOLITION OF WALLS AND CEILINGS AS REQUIRED TO ACCOMMODATE INSTALLATION OF STRUCTURAL, MECHANICAL AND ELECTRICAL ROUGH-INS AND EQUIPMENT.
2. ALL EXISTING FURNITURE, EQUIPMENT, DESKS, ARTWORK, AND WALL MOUNTED BOARDS IN OFFICES, CORRIDOR, AND MAIN LIBRARY AREA WILL BE REMOVED BY SCHOOL BOARD PRIOR TO DEMOLITION AND CONSTRUCTION.
3. EXISTING WOOD STAGE, AND ASSOCIATED CARPET FLOORING, SHALL BE REMOVED COMPLETED. GENERAL CONTRACTOR IS RESPONSIBLE FOR PATCHING, REPAIRING AND MAKING GOOD EXISTING WALLS, GRIND, SMOOTH AND LEVEL SLAB PRIOR TO PAINTING AND INSTALLATION OF NEW FLOORING.

TYPICAL GRAPHIC SYMBOLS

GREY TONE REPRESENTS EXISTING

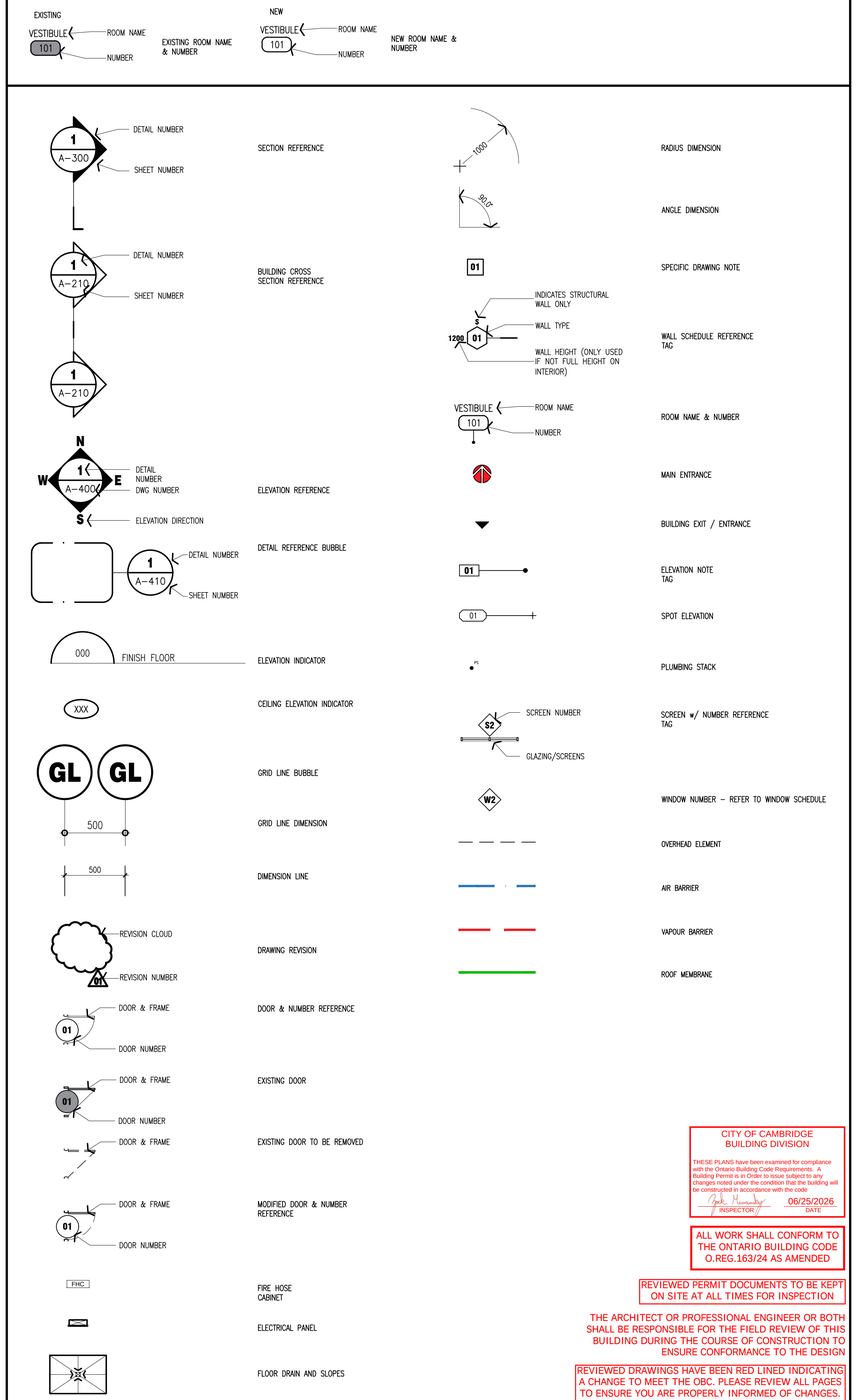

CITY OF CAMBRIDGE
BUILDING DIVISION

THESE PLANS have been examined for compliance with the Ontario Building Code Requirements. A Building Permit is in Order to issue subject to any changes noted under the condition that the building will be constructed in accordance with the code

INSPECTOR — DATE 06/25/2026

ALL WORK SHALL CONFORM TO THE ONTARIO BUILDING CODE O.REG.163/24 AS AMENDED

REVIEWED PERMIT DOCUMENTS TO BE KEPT ON SITE AT ALL TIMES FOR INSPECTION

THE ARCHITECT OR PROFESSIONAL ENGINEER OR BOTH SHALL BE RESPONSIBLE FOR THE FIELD REVIEW OF THIS BUILDING DURING THE COURSE OF CONSTRUCTION TO ENSURE CONFORMANCE TO THE DESIGN

REVIEWED DRAWINGS HAVE BEEN RED LINED INDICATING A CHANGE TO MEET THE OBC. PLEASE REVIEW ALL PAGES TO ENSURE YOU ARE PROPERLY INFORMED OF CHANGES.

CALL INSPECTOR FOR COMMENCEMENT OF CONSTRUCTION INSPECTION BEFORE STARTING WORK. INSPECTOR CONTACT INFORMATION IS NOTED ON THE PERMIT CARD

NOT THE GRANTING OF A PERMIT NOR REVIEWING OF SPECS & DRAWINGS NOR INSPECTIONS MADE DURING INSTALLATION BY THE OFFICIAL HAVING JURISDICTION SHALL RELIEVE THE OWNER FROM REQUIREMENTS OF THE ONTARIO BUILDING CODE AND ANY OTHER REFERENCED REQUIREMENTS.

PROJECT TEAM

CLIENT

WATERLOO REGION DISTRICT SCHOOL BOARD

CONTACT: ROBERT PERKO
51 ARDELT AVE
KITCHENER, ONTARIO
PHONE: 519-465-0362

ARCHITECTURAL

BJC architects + assocs. inc.

CONTACT: MR. BARRY R. JOHNSON
R.R.#2 8016 HIGHWAY #7,
GUELPH, ON N1H 6H8
PHONE: 519-822-7390
FAX: 519-822-5881

MECHANICAL & ELECTRICAL

SAB ENGINEERING INC.

CONTACT: MS. GABRIELA STRASHUN
ADDRESS: 588 EDWARD AVE. UNIT 25
CITY: RICHMOND HILL, ONTARIO
PHONE: 905-787-8885
FAX: 905-787-8771

NOTE 1:

THESE DRAWINGS ARE PREPARED WITH THE USE OF LINE TYPES, HATCH PATTERNS, COLOURS, AND NUMERICALLY DESIGNATED NOTES. COLLECTIVELY THESE REPRESENT THE FULL SCOPE OF WORK, WITH THE INTENT TO PROVIDE CLARITY. NOT ALL ITEMS MAY BE INDIVIDUALLY NOTED. IF ANYTHING IS AMBIGUOUS THE GENERAL CONTRACTOR IS TO ASK FOR CLARIFICATION AT THE TIME OF TENDER. FAILURE TO DO SO WILL LEAVE THE INTERPRETATION OF THE DRAWINGS TO THE ARCHITECT. THIS NOTE APPLIES TO ALL DRAWINGS.

NOTE 2:

THIS DRAWING CONTAINS THE USE OF COLOUR TO BETTER ILLUSTRATE AND DESCRIBE THE INTENT OF THE DRAWING BY HIGHLIGHTING LINE TYPES, HATCH PATTERNS, TEXT, DIMENSIONS, OR TONES. IT IS MANDATORY THAT THIS DRAWING BE PRINTED IN COLOUR FOR ITS USE. FAILURE TO DO SO WILL NOT RESULT IN ANY COMPENSATION FOR COSTS OR TIME LOST BY THE GC OR HIS/HER SUBTRADE DUE TO OMISSIONS, ERRORS, OR MISUNDERSTANDING OF THE FULL SCOPE OF THE WORK.

ABBREVIATIONS

A/C TILE. –	ACOUSTIC TILE	G.C. –	GENERAL CONTRACTOR	PLYWD. –	PLYWOOD
ADJ. –	ADJUSTABLE	GLAZ. –	GLAZING	PREFIN. –	PRE-FINISHED
A.H.J. –	AUTHORITY HAVING JURISDICTION	GWB. –	GYPSUM WALL BOARD	RD. –	ROOF DRAIN
B.F. –	BARRIER FREE	GA. –	GAGE	REQ'D. –	REQUIRED
BLK. –	BLOCK	H.M. –	HOLLOW METAL	REINF. –	REINFORCED
BD. –	BOARD	HD/SLR –	HARDENER & SEALER	SIM. –	SIMILAR
BLDG. –	BUILDING	HORIZ. –	HORIZONTAL, HORIZONTALLY	SS. –	STAINLESS STEEL
CLG. –	CEILING	HT. –	HEIGHT	STL. –	STEEL
CT. –	CERAMIC TILE	INCL. –	INCLUDING	STRUCT'L –	STRUCTURAL
c/w –	COMPLETE WITH	JT. –	JOINT	SUSP. –	SUSPENDED
COORD. –	COORDINATE	MAX. –	MAXIMUM	T.O.S. –	TOP OF SLAB
DEMO. –	DEMOLISH, DEMOLITION	MECH. –	MECHANICAL	TYP. –	TYPICAL
DN. –	DOWN	MIN. –	MINIMUM	u/s –	UNDERSIDE
DWG. –	DRAWING	MTD. –	MOUNTED	U.N.O –	UNLESS NOTED OTHERWISE
EA. –	EACH	MTG. –	MOUNTING	V.B. –	VAPOUR BARRIER
ELECT. –	ELECTRICAL	MTL. –	METAL	V.C.T. –	VINYL COMPOSITION TILE
EQ. –	EQUIVALENT, OR EQUAL	MEZZ. –	MEZZANINE	VERT. –	VERTICAL, VERTICALLY
EQPMNT. –	EQUIPMENT	N/A –	NOT APPLICABLE	W.W.F. –	WELDED WIRE FABRIC
EXIST. –	EXISTING	N.I.C. –	NOT IN CONTRACT	w/ –	WITH
E.J. –	EXPANSION JOINT	N.R. –	NOT REQUIRED	WD. –	WOOD
F.D. –	FLOOR DRAIN	O.C. –	ON CENTRE		
FFE. –	FINISHED FLOOR ELEVATION	O.D. –	OUTSIDE DIAMETER		
FIN. –	FINISHED	PTD. –	PAINTED		
FLR. –	FLOOR	PART. –	PARTIAL		
GALV. –	GALVANIZED	P. LAM. –	PLASTIC LAMINATE		

KEY PLAN

NTS

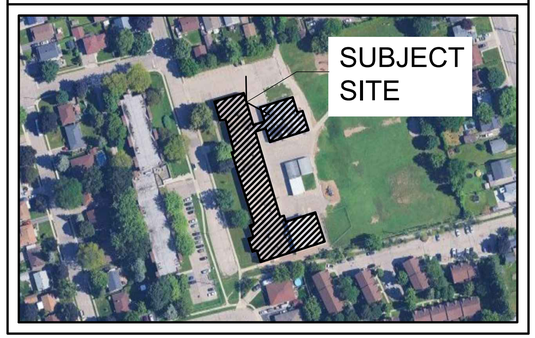

Waterloo Region District School Board

NOTE:
This drawing and all associated documentation are the confidential property of BJC architects + assocs. inc. and must be returned upon request. Any duplication, reuse, revision and/or distribution in part or whole without the prior written authorization of BJC architects + assocs. inc. is strictly prohibited. Each contractor will check and verify all dimensions and report all errors and omissions to the design professional whose seal is affixed to this drawing. Do not scale this drawing.
The information and material herein reflect the best judgement of BJC architects + assocs. inc., in light of the information available to them at the time of preparation of these documents. Any use which a third party makes of these documents, or any reliance on or decisions to be made based on them, is the sole responsibility of such third party. BJC architects + assocs. inc. accepts no responsibility for damages, if any, suffered by any third party as a result of decisions made or actions based on these documents © BJC architects + assocs. inc. 2026.

No.	REVISIONS	date
02	ISSUED FOR PERMIT	2026.04.17
01	ISSUED FOR TENDER	2026.03.24

PROJECT NORTH — TRUE NORTH — scale AS NOTED

ONTARIO ASSOCIATION OF ARCHITECTS — BARRY R. JOHNSON — LICENCE 3584

drawn	VA
last worked on	2026.03.10 by NJB
checked	B.R.J.
print date	2026.04.17

BJC architects + assocs. inc.

client
WATERLOO REGION DISTRICT SCHOOL BOARD
51 ARDELT AVENUE
KITCHENER ONTARIO

project
CHALMERS PUBLIC SCHOOL RENOVATION
35 CHALMERS STREET SOUTH
CAMBRIDGE ONTARIO

drawing title
GENERAL NOTES & INDEX

reference

project no. 25-104
client reference number

sheet no. A-001 02

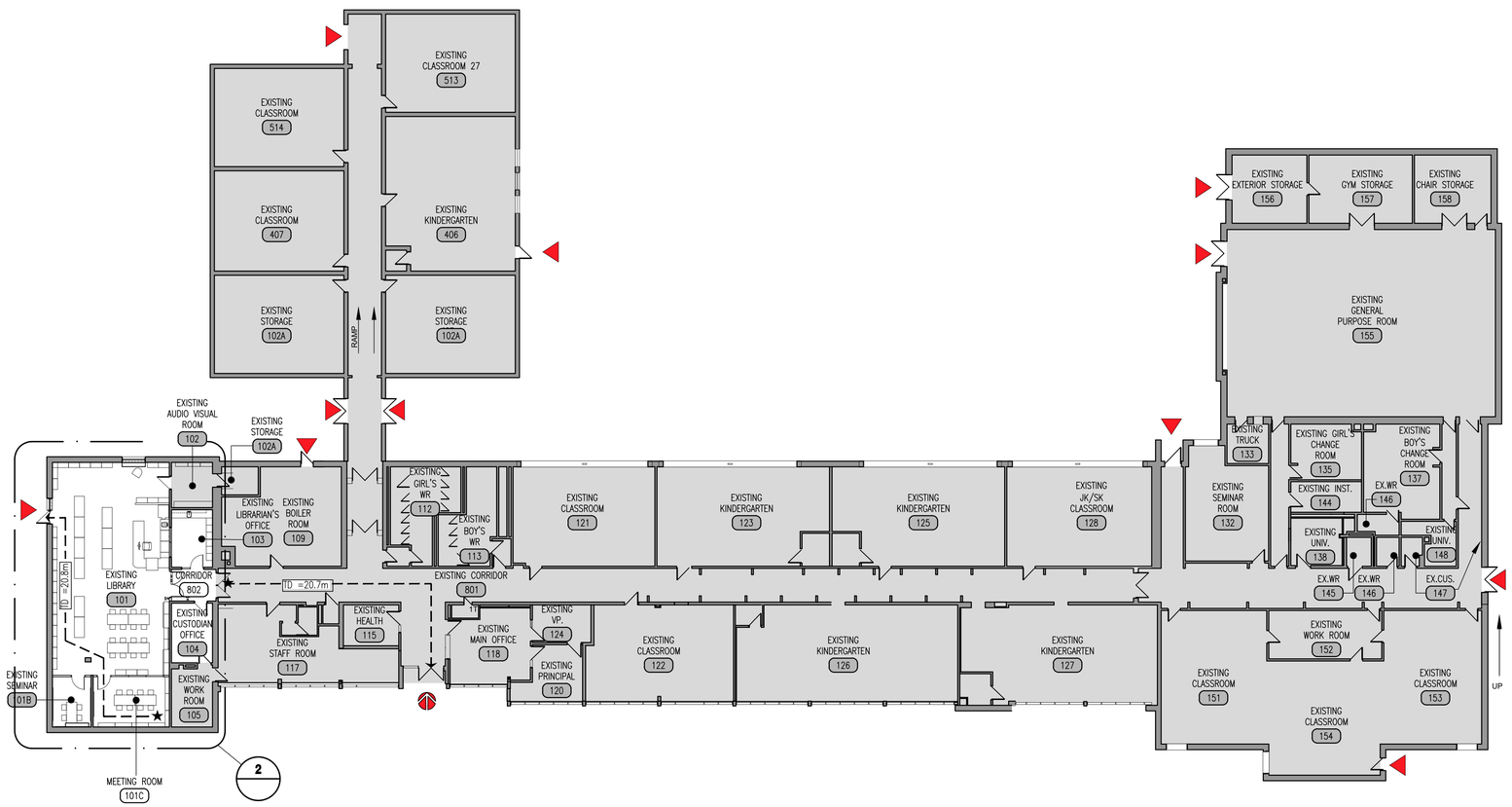

1 TRAVEL DISTANCE PLAN

scale: 1 : 200

LEGEND

	APPROXIMATE AREA NOT IN CONTRACT SCOPE.
▶	END OF TRAVEL.
★	FURTHEST POINT OF TRAVEL.
ID =0.0m	TRAVEL DISTANCE.

PART 11 - A2 OCCUPANCY

ITEM	2024 ONTARIO BUILDING CODE			O.B.C. REFERENCE
11.2	EXISTING BUILDING CLASSIFICATION:	CHANGE IN MAJOR OCCUPANCY:	☐ YES ☒ NOT APPLICABLE (no change of major occupancy)	10.1.1.2., 11.2.1.1. TABLE 11.2.1.1.A TABLE 11.2.1.1.B to N 4.1.2.1.(3), 2.3.1., & 5.2.2.1.(2)
		CONSTRUCTION INDEX:	N/A – NO CHANGE IN MAJOR	
		HAZARD INDEX:	N/A – NO CHANGE IN MAJOR	
		IMPORTANCE CATEGORY:	☐ LOW ☐ NORMAL ☒ HIGH ☐ POST-DISASTER	
11.3	ALTERATIONS TO EXISTING BUILDING IS:	☒ BASIC RENOVATION	☐ EXTENSIVE RENOVATION	11.3.3.1. & 11.3.3.2.
11.4	REDUCTION IN PERFORMANCE LEVEL:	STRUCTURAL:	☒ NO ☐ YES	11.4.2.1.
		BY INCREASE IN OCCUPANT LOAD:	☒ NO ☐ YES	11.4.2.2.
		BY CHANGE OF MAJOR OCCUPANCY:	☒ NO ☐ YES	11.4.2.3.
				11.4.2.4.
		PLUMBING:	☒ NO ☐ YES	11.4.2.5.
		SEWAGE-SYSTEM:	☒ NO ☐ YES	
		EXTENSION OF BUILDINGS OF COMBUSTIBLE CONSTRUCTION:	☒ NO ☐ YES	11.4.2.6.
11.5	COMPENSATING CONSTRUCTION:	☒ NO	☐ YES:	11.4.3.1.
		STRUCTURAL:	☒ NO ☐ YES	11.4.3.2.
		INCREASE IN OCCUPANT LOAD:	☒ NO ☐ YES	11.4.3.3.
		CHANGE OF MAJOR OCCUPANCY:	☒ NO ☐ YES	11.4.3.4.
		PLUMBING:	☒ NO ☐ YES	11.4.3.5.
		SEWAGE-SYSTEM:	☒ NO ☐ YES	11.4.3.6.
		EXTENSION OF BUILDINGS OF COMBUSTIBLE CONSTRUCTION:	☒ NO ☐ YES	11.4.3.7.
11.6	COMPLIANCE ALTERNATIVES PROPOSED:	NO	☒	11.5.1.
		YES	☐	
11.7	ALTERNATIVE MEASURES PROPOSED:	NO	☒	[A] 1.2.1.1., & [C] 2.1.
		YES	☐	

NOT THE GRANTING OF A PERMIT NOR REVIEWING OF SPECS & DRAWINGS NOR INSPECTIONS MADE DURING INSTALLATION BY THE OFFICIAL HAVING JURISDICTION SHALL RELIEVE THE OWNER FROM REQUIREMENTS OF THE ONTARIO BUILDING CODE AND ANY OTHER REFERENCED REQUIREMENTS.

Waterloo Region District School Board

NOTE:
This drawing and all associated documentation are the confidential property of BJC architects + assocs. inc. and must be returned upon request. Any duplication, reuse, revision and/or distribution in part or whole without the prior written authorization of BJC architects + assocs. inc. is strictly prohibited. Each contractor will check and verify all dimensions and report all errors and omissions to the design professional whose seal is affixed to this drawing. Do not scale this drawing.
The information and material herein reflect the best judgement of BJC architects + assocs. inc., in light of the information available to them at the time of preparation of these documents. Any use which a third party makes of these documents, or any reliance on or decisions to be made based on them, is the sole responsibility of such third party. BJC architects + assocs. inc. accepts no responsibility for damages, if any, suffered by any third party as a result of decisions made or actions based on these documents © BJC architects + assocs. inc. 2026.

No.	REVISIONS	date
02	ISSUED FOR PERMIT	2026.04.17
01	ISSUED FOR TENDER	2026.03.24

PROJECT NORTH

TRUE NORTH

scale AS NOTED

ONTARIO ASSOCIATION OF ARCHITECTS
BRIAN R. JOHNSON
LICENCE 8684

drawn DE
last worked on 2026.06.24 by VA
checked B.R.J.
print date 2026.04.17

BJC architects + assocs. inc.

client
WATERLOO REGION DISTRICT SCHOOL BOARD
51 ARDELT AVENUE
KITCHENER ONTARIO

project
CHALMERS PUBLIC SCHOOL RENOVATION
35 CHALMERS STREET SOUTH
CAMBRIDGE ONTARIO

drawing title
OVERALL FLOOR PLAN & OBC MATRIX

reference

project no. 25-104
client reference number

sheet no. A-002 02

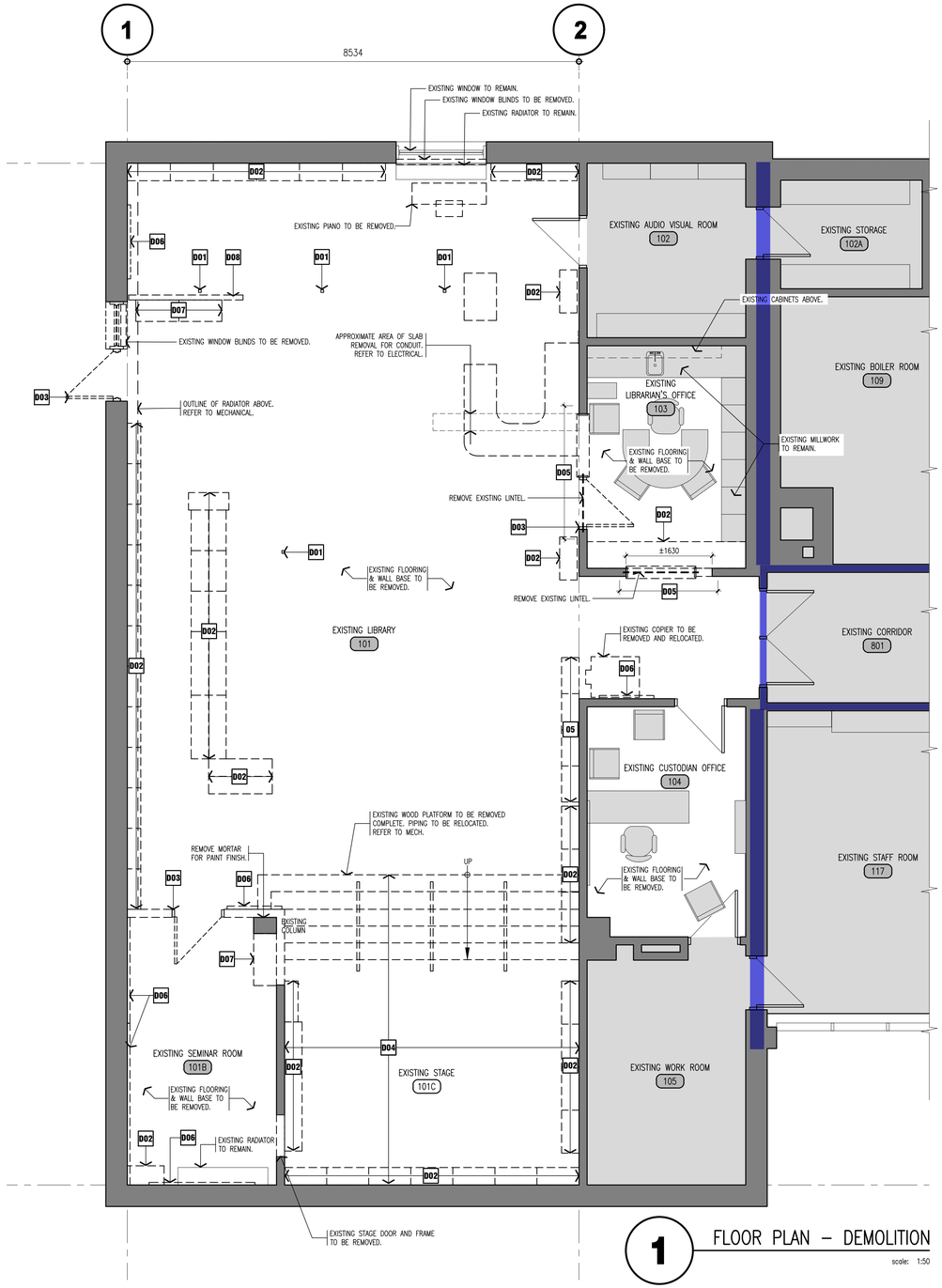

1 FLOOR PLAN – DEMOLITION

scale: 1:50

DEMOLITION NOTES:

1. SELECTIVE DEMOLITION OF WALLS AND CEILINGS AS REQUIRED TO ACCOMMODATE INSTALLATION OF STRUCTURAL, MECHANICAL AND ELECTRICAL ROUGH-INS AND EQUIPMENT.
2. ALL EXISTING FURNITURE, EQUIPMENT, DESKS, ARTWORK, AND WALL MOUNTED BOARDS IN OFFICES, CORRIDOR, AND MAIN LIBRARY AREA WILL BE REMOVED BY SCHOOL BOARD PRIOR TO DEMOLITION AND CONSTRUCTION.
3. EXISTING WOOD STAGE, AND ASSOCIATED CARPET FLOORING, SHALL BE REMOVED COMPLETED. GENERAL CONTRACTOR IS RESPONSIBLE FOR PATCHING, REPAIRING AND MAKING GOOD EXISTING WALLS, GRIND, SMOOTH AND LEVEL SLAB PRIOR TO PAINTING AND INSTALLATION OF NEW FLOORING.
4. REFER TO MECHANICAL DEMO DRAWINGS FOR SCOPE OF PIPES REMAINING AND BEING REMOVED.
5. FOR SHORING, INSTALL 2"X10" SPF PLANK ON EACH SIDE FASTENED TO BLOCK WITH TAPCONS (THREE AT 300 C/C EACH SIDE. ALTERNATE SHORING TO BE APPROVED BY ENGINEER.

DEMOLITION KEY NOTES:

- **D01** EXISTING POWER POST TO BE REMOVED.
- **D02** EXISTING BOOK SHELVING TO BE REMOVED.
- **D03** EXISTING DOOR AND FRAME TO BE REMOVED.
- **D04** EXISTING STAIRS, RAILINGS, AND PLATFORM TO BE REMOVED.
- **D05** UPPER PORTION OF BLOCK WALL TO BE REMOVED FOR NEW LINTEL INSTALLATION.
- **D06** EXISTING WHITEBOARD/TACKBOARD TO BE REMOVED.
- **D07** EXISTING BOOK SHELVING ON CASTORS TO BE REMOVED.
- **D08** EXISTING ROOM DIVIDER TO BE REMOVED.

CITY OF CAMBRIDGE
ZONING APPROVAL
SIGNATURE — DATE 04/23/2026

NOT THE GRANTING OF A PERMIT NOR REVIEWING OF SPECS & DRAWINGS NOR INSPECTIONS MADE DURING INSTALLATION BY THE OFFICIAL HAVING JURISDICTION SHALL RELIEVE THE OWNER FROM REQUIREMENTS OF THE ONTARIO BUILDING CODE AND ANY OTHER REFERENCED REQUIREMENTS.

= EXISTING 1 HOUR FIRE SEPARATION

2 FLOOR PLAN – RENOVATION

scale: 1:50

NOTE 1:

THESE DRAWINGS ARE PREPARED WITH THE USE OF LINE TYPES, HATCH PATTERNS, COLOURS, AND NUMERICALLY DESIGNATED NOTES. COLLECTIVELY THESE REPRESENT THE FULL SCOPE OF WORK, WITH THE INTENT TO PROVIDE CLARITY. NOT ALL ITEMS MAY BE INDIVIDUALLY NOTED. IF ANYTHING IS AMBIGUOUS THE GENERAL CONTRACTOR IS TO ASK FOR CLARIFICATION AT THE TIME OF TENDER. FAILURE TO DO SO WILL LEAVE THE INTERPRETATION OF THE DRAWINGS TO THE ARCHITECT. THIS NOTE APPLIES TO ALL DRAWINGS.

NOTE 2:

THIS DRAWING CONTAINS THE USE OF COLOUR TO BETTER ILLUSTRATE AND DESCRIBE THE INTENT OF THE DRAWING BY HIGHLIGHTING LINE TYPES, HATCH PATTERNS, TEXT, DIMENSIONS, OR TONES. IT IS MANDATORY THAT THIS DRAWING BE PRINTED IN COLOUR FOR ITS USE. FAILURE TO DO SO WILL NOT RESULT IN ANY COMPENSATION FOR COSTS OR TIME LOST BY THE GC OR HIS/HER SUBTRADE DUE TO OMISSIONS, ERRORS, OR MISUNDERSTANDING OF THE FULL SCOPE OF THE WORK.

LEGEND

- NEW MILLWORK.
- NEW FURNITURE & EQUIPMENT SUPPLIED BY OWNER, INSTALLED BY THE GC
- EXISTING FURNITURE & EQUIP. SUPPLIED BY OWNER, INSTALLED BY VENDOR. GC TO COORDINATE.
- NEW DOOR & FRAME.
- EXISTING DOOR & FRAME.
- EXISTING WALL.
- NEW INTERIOR WALL.
- APPROXIMATE AREA NOT IN CONTRACT SCOPE.

RENOVATION NOTES

- **01** NEW BOOK SHELVING.
- **02** REPAIR/PATCH WALLS FOLLOWING REMOVAL OF STAGE AND SHELVING TO MAKE READY FOR PAINT FINISH.
- **03** RESERVED.
- **04** NEW WHITEBOARD/TACK-BOARD. SUPPLIED AND INSTALLED BY GC.
- **05** RESERVED.
- **06** NEW KNEE WALL c/w WOOD CAP. PAINT FINISH
- **07** NEW TV MONITOR.

Waterloo Region District School Board

NOTE:
This drawing and all associated documentation are the confidential property of BJC architects + assocs. inc. and must be returned upon request. Any duplication, reuse, revision and/or distribution in part or whole without the prior written authorization of BJC architects + assocs. inc. is strictly prohibited. Each contractor will check and verify all dimensions and report all errors and omissions to the design professional whose seal is affixed to this drawing. Do not scale this drawing.
The information and material herein reflect the best judgement of BJC architects + assocs. inc., in light of the information available to them at the time of preparation of these documents. Any use which a third party makes of these documents, or any reliance on or decisions to be made based on them, is the sole responsibility of such third party. BJC architects + assocs. inc. accepts no responsibility for damages, if any, suffered by any third party as a result of decisions made or actions based on these documents © BJC architects + assocs. inc. 2026.

No.	REVISIONS	date
02	ISSUED FOR PERMIT	2026.04.17
01	ISSUED FOR TENDER	2026.03.24

PROJECT NORTH — TRUE NORTH — scale AS NOTED

ONTARIO ASSOCIATION OF ARCHITECTS — BARRY R. JOHNSTON — LICENCE 8584

drawn	VA
last worked on	2026.06.24
by	VA
checked	B.R.J.
print date	2026.04.17

BJC architects + assocs. inc.

client
WATERLOO REGION DISTRICT SCHOOL BOARD
51 ARDELT AVENUE
KITCHENER ONTARIO

project
CHALMERS PUBLIC SCHOOL RENOVATION
35 CHALMERS STREET SOUTH
CAMBRIDGE ONTARIO

drawing title
FLOOR PLANS DEMOLITION & RENOVATION

reference

project no. 25-104
client reference number

sheet no. A-110 02

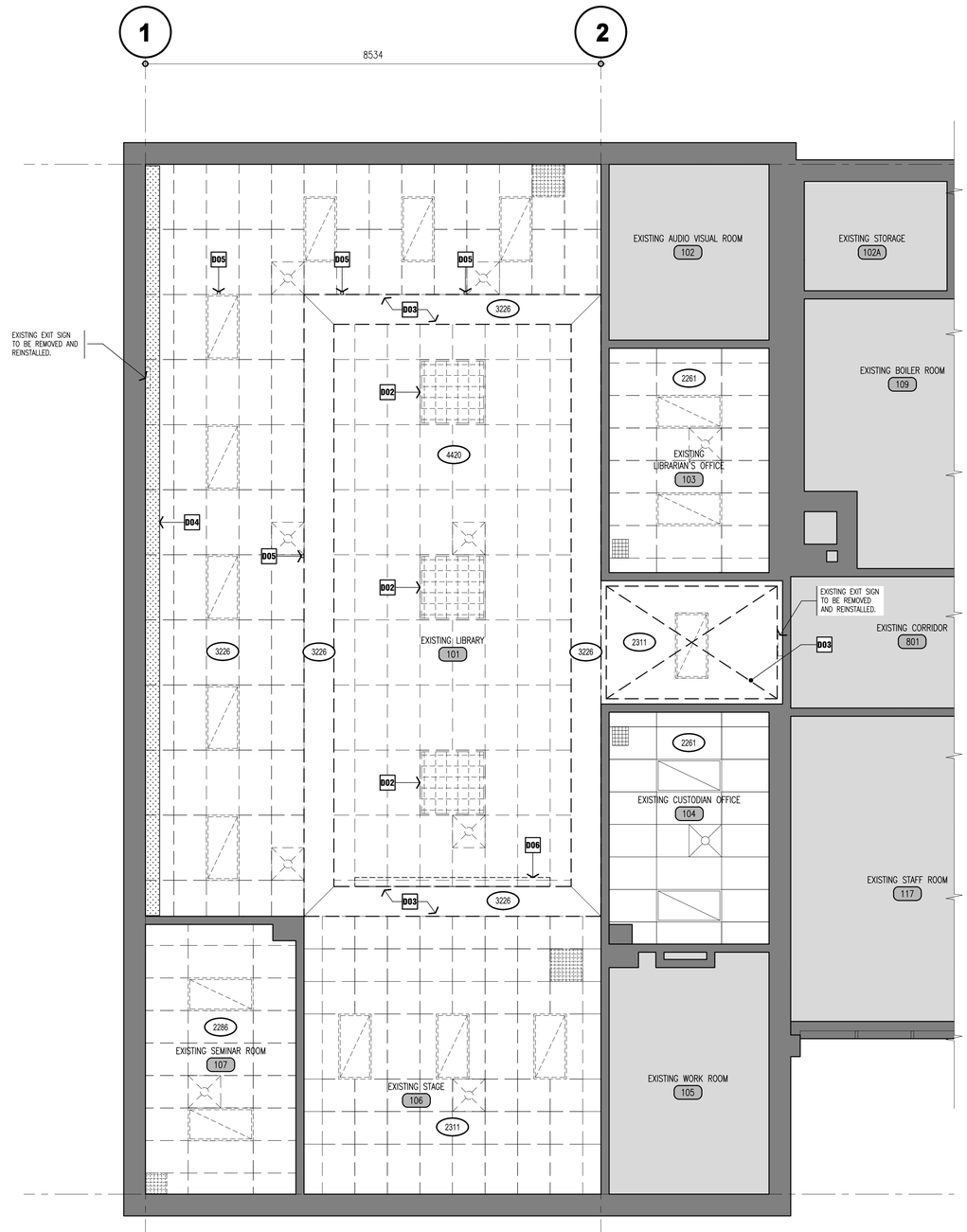

1 REFLECTED CEILING PLAN – DEMOLITION

scale: 1:50

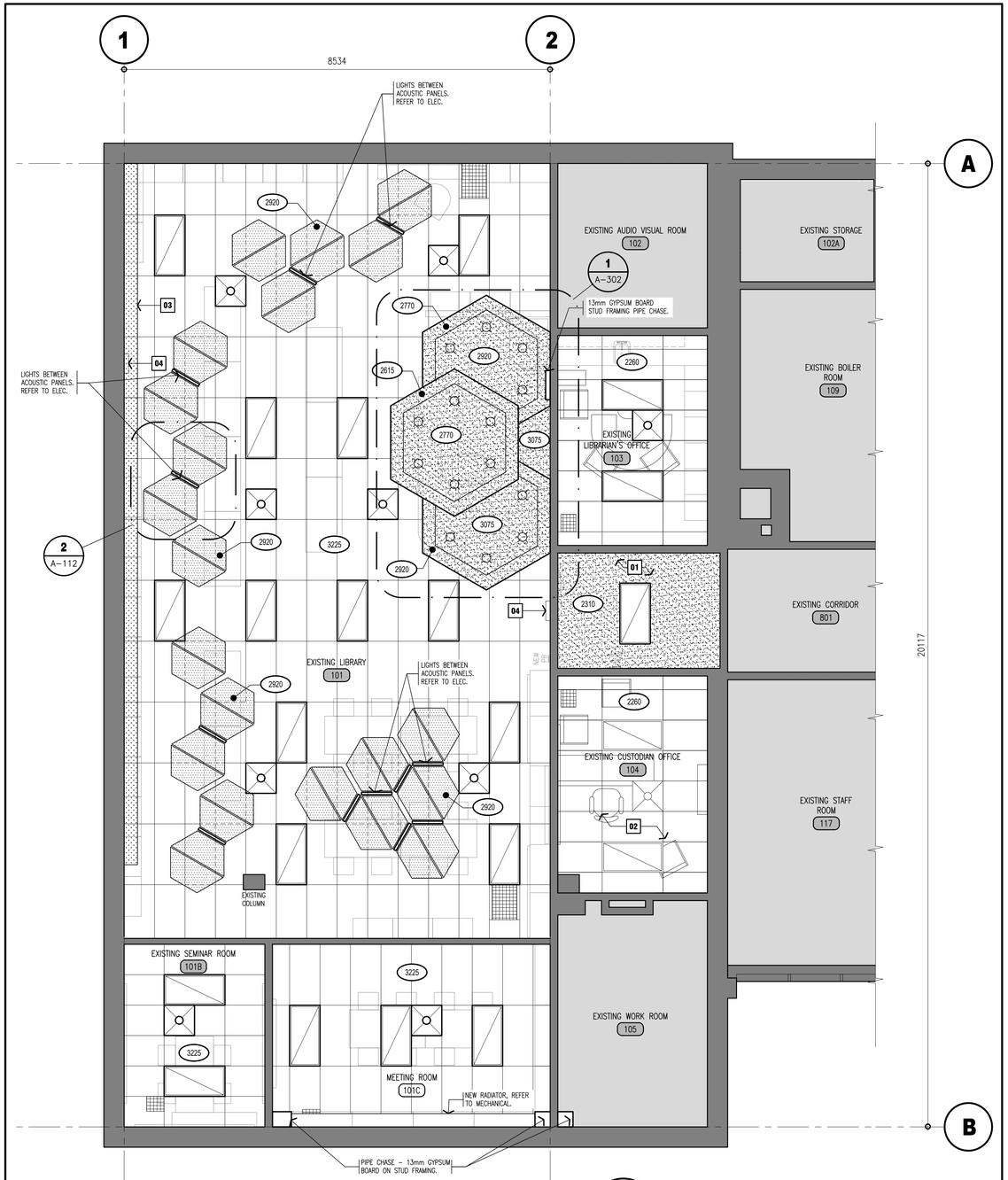

2 REFLECTED CEILING PLAN – RENOVATION

scale: 1:50

GENERAL NOTES

1. CONTRACTOR MUST VERIFY ALL DIMENSIONS AND BE RESPONSIBLE FOR THE SAME. REPORT ANY ERRORS OR OMISSIONS TO THE ARCHITECT IN WRITING PRIOR TO COMMENCING WITH THE WORK. PRINTS ARE NOT TO BE SCALED.
2. THIS DRAWING IS TO BE READ IN CONJUNCTION WITH ALL OTHER ARCHITECTURAL, CIVIL, LANDSCAPE, STRUCTURAL, MECHANICAL & ELECTRICAL DRAWINGS FOR A COMPLETE SCOPE OF WORK.
3. SELECTIVE DEMOLITION OF WALLS AND CEILINGS AS REQUIRED TO ACCOMMODATE INSTALLATION OF STRUCTURAL, MECHANICAL AND ELECTRICAL ROUGH-INS AND EQUIPMENT.
4. COORDINATE WITH MECHANICAL FOR THE PROTECTION OF EXISTING SPRINKLER SYSTEM DURING THE DEMOLITION AND REMOVAL OF CEILINGS. REFER TO MECHANICAL DRAWINGS.
5. ALL EXISTING FURNITURE, EQUIPMENT, DESKS, ARTWORK, AND WALL MOUNTED BOARDS WILL BE REMOVED BY SCHOOL BOARD PRIOR TO DEMOLITION AND CONSTRUCTION.
6. REFER TO MECHANICAL DEMO DRAWINGS FOR SCOPE OF PIPES REMAINING AND BEING REMOVED.

DEMOLITION NOTES:

D01	RESERVED.
D02	EXISTING LIGHTS TO BE REMOVED.
D03	EXISTING GYPSUM BOARD CEILING AND FRAMING TO BE REMOVED.
D04	EXISTING RADIATOR TO REMAIN AND TO BE PAINTED.
D05	EXISTING POWER POST TO BE REMOVED.
D06	EXISTING PROJECTOR SCREENS TO BE REMOVED AND RELOCATED.

LEGEND

- XXXX — CEILING ELEVATION MARKER ABOVE FINISHED LEVEL.
- NEW ACOUSTIC TILE CEILING & EXISTING GRID SYSTEM.
- LIGHT FIXTURE. (REFER TO ELECTRICAL DRAWINGS).
- MECHANICAL GRILLES & DIFFUSERS. (REFER TO MECHANICAL DRAWINGS).
- NEW GYPSUM BOARD CEILING.
- NEW SUSPENDED ACOUSTIC PANEL.

RENOVATION NOTES

01	NEW GYPSUM CEILING AND/OR BULKHEAD.
02	EXISTING CEILING GRID AND ACOUSTIC CEILING TILES TO REMAIN.
03	EXISTING RADIATOR TO REMAIN AND TO BE PAINTED.
04	REINSTALLED EXIT SIGN.
05	RESERVED.
06	RESERVED.

NOT THE GRANTING OF A PERMIT NOR REVIEWING OF SPECS & DRAWINGS NOR INSPECTIONS MADE DURING INSTALLATION BY THE OFFICIAL HAVING JURISDICTION SHALL RELIEVE THE OWNER FROM REQUIREMENTS OF THE ONTARIO BUILDING CODE AND ANY OTHER REFERENCED REQUIREMENTS.

Waterloo Region District School Board

NOTE:
This drawing and all associated documentation are the confidential property of BJC architects + assocs. inc. and must be returned upon request. Any duplication, reuse, revision and/or distribution in part or whole without the prior written authorization of BJC architects + assocs. inc. is strictly prohibited. Each contractor will check and verify all dimensions and report all errors and omissions to the design professional whose seal is affixed to this drawing. Do not scale this drawing.
The information and material herein reflect the best judgement of BJC architects + assocs. inc., in light of the information available to them at the time of preparation of these documents. Any use which a third party makes of these documents, or any reliance on or decisions to be made based on them, is the sole responsibility of such third party. BJC architects + assocs. inc. accepts no responsibility for damages, if any, suffered by any third party as a result of decisions made or actions based on these documents © BJC architects + assocs. inc. 2026.

No.	REVISIONS	date
02	ISSUED FOR PERMIT	2026.04.17
01	ISSUED FOR TENDER	2026.03.24

PROJECT NORTH

TRUE NORTH

scale AS NOTED

ONTARIO ASSOCIATION OF ARCHITECTS — JENNY SOHSON LICENCE 8884

drawn	VA
last worked on	2026.03.06
by	VA
checked	B.R.J.
print date	2026.04.17

BJC architects + assocs. inc.

client
WATERLOO REGION DISTRICT SCHOOL BOARD
51 ARDELT AVENUE
KITCHENER ONTARIO

project
CHALMERS PUBLIC SCHOOL RENOVATION
35 CHALMERS STREET SOUTH
CAMBRIDGE ONTARIO

drawing title
REFLECTED CEILING PLANS – DEMO & RENOVATION

reference

project no. 25-104

client reference number

sheet no. A-111 02

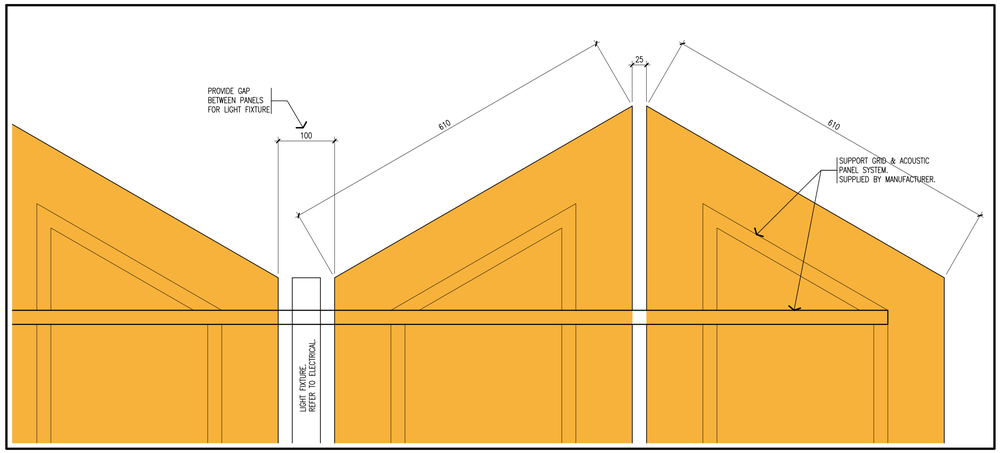

1 DETAIL AT DECORATIVE PANELS

scale: 1:5

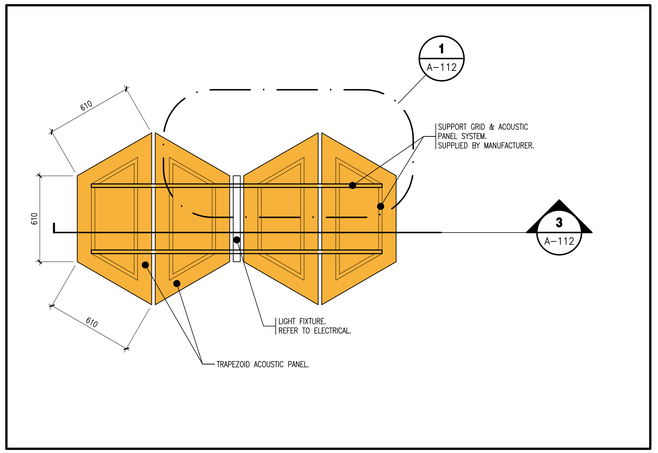

2 DECORATIVE PANEL DETAIL

scale: 1:20

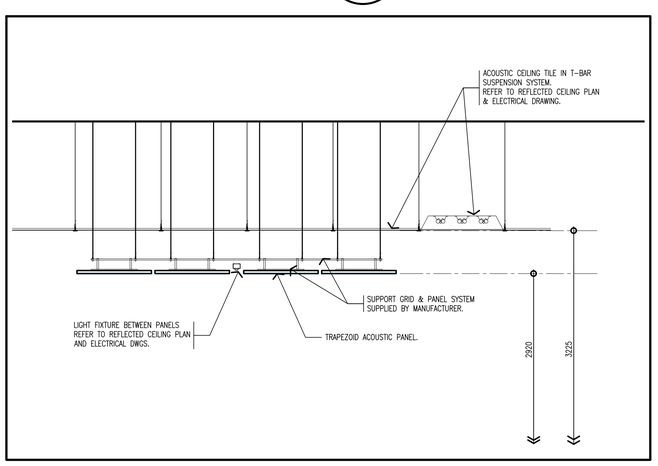

3 PANEL SECTION DETAIL

scale: 1:20

DRAWING NOTES

RENOVATION:

01 NEW GYPSUM CEILING AND/OR BULKHEAD.

02 EXISTING CEILING GRID AND ACOUSTIC CEILING TILES TO REMAIN.

03 EXISTING RADIATOR TO REMAIN AND TO BE PAINTED.

04 REINSTALLED EXIT SIGN.

05 RESERVED.

06 RESERVED.

07 RESERVED.

LEGEND

- APPROXIMATE AREA NOT IN CONTRACT SCOPE.
- EXISTING WALL.
- ROOM NAME / 101 — ROOM NAME & NUMBER.
- ROOM NAME / 101 — EXISTING ROOM NAME & NUMBER.
- SECONDARY ENTRANCE/EXIT.
- XXXX — CEILING ELEVATION MARKER ABOVE FINISHED LEVEL.
- NEW ACOUSTIC TILE CEILING & EXISTING GRID SYSTEM.
- LIGHT FIXTURE. (REFER TO ELECTRICAL DRAWINGS).
- MECHANICAL GRILLES & DIFFUSERS. (REFER TO MECHANICAL DRAWINGS).

NOT THE GRANTING OF A PERMIT NOR REVIEWING OF SPECS & DRAWINGS NOR INSPECTIONS MADE DURING INSTALLATION BY THE OFFICIAL HAVING JURISDICTION SHALL RELIEVE THE OWNER FROM REQUIREMENTS OF THE ONTARIO BUILDING CODE AND ANY OTHER REFERENCED REQUIREMENTS.

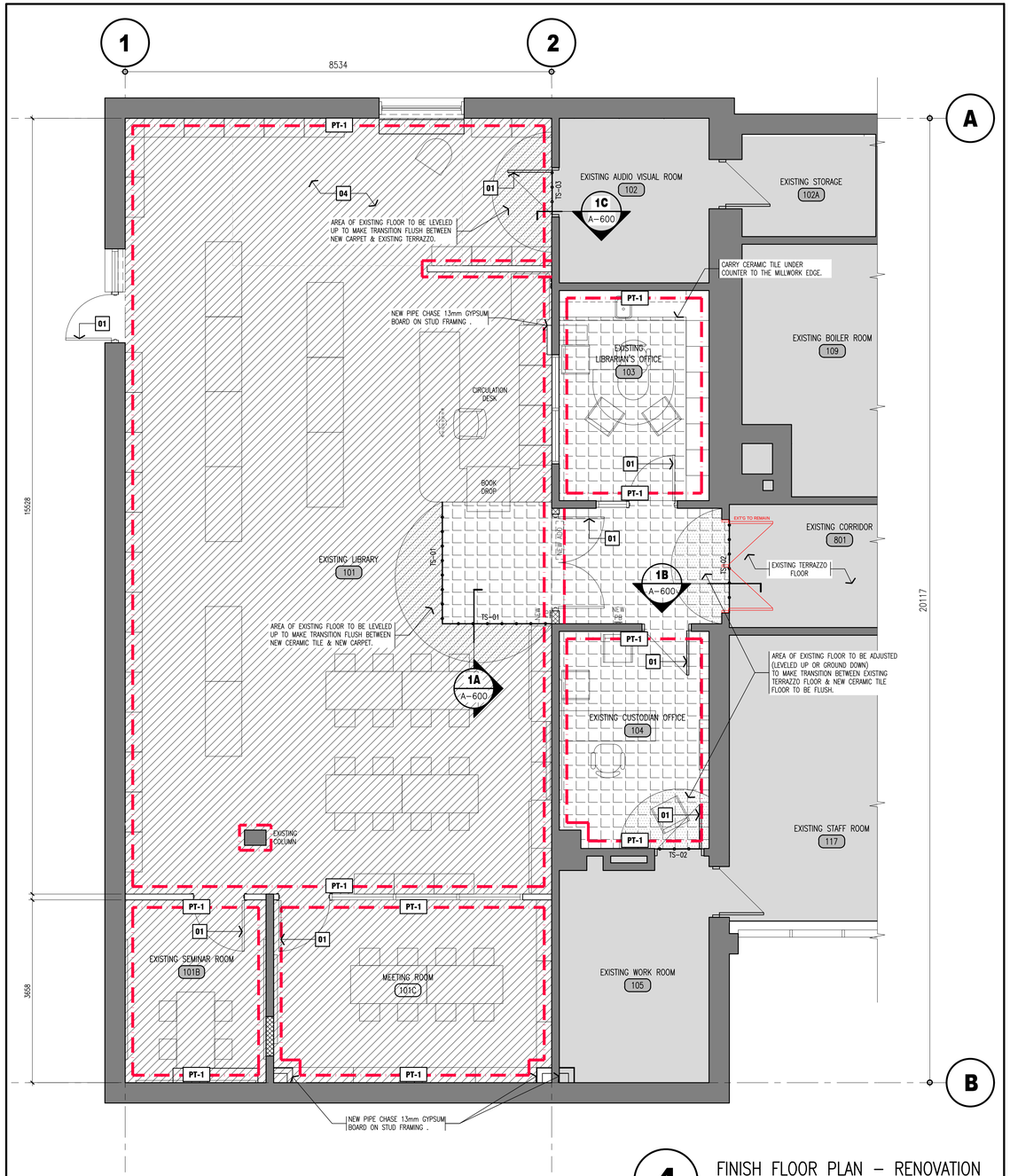

4 FINISH FLOOR PLAN – RENOVATION

scale: 1:50

LEGEND

- AREA OF NEW CARPET c/w RUBBER WALL BASE. (CP-1)
- AREA OF NEW CERAMIC FLOOR TILE FLOORING c/w TILE WALL BASE. (CT-1)
- PT-# — WALL PAINT FINISH. MANUFACTURER: BENJAMIN MOORE COLOUR: TBD
- TS-XX — TRANSITION STRIP.

RENOVATION NOTES:

01 DOOR AND FRAME TO BE PAINTED. COLOUR: TBD

02 CARPET FLOOR FINISH c/w 100mm RUBBER WALL BASE. SUPPLIED AND INSTALLED BY CC.

03 CERAMIC TILE FLOOR FINISH c/w TILE WALL BASE. SUPPLIED AND INSTALLED BY CC.

04 CARPET OR RUG IN STORYTELLING SPACE.

Waterloo Region District School Board

NOTE:
This drawing and all associated documentation are the confidential property of BJC architects + assocs. inc. and must be returned upon request. Any duplication, reuse, revision and/or distribution in part or whole without the prior written authorization of BJC architects + assocs. inc. is strictly prohibited. Each contractor will check and verify all dimensions and report all errors and omissions to the design professional whose seal is affixed to this drawing. Do not scale this drawing.
The information and material herein reflect the best judgement of BJC architects + assocs. inc., in light of the information available to them at the time of preparation of these documents. Any use which a third party makes of these documents, or any reliance on or decisions to be made based on them, is the sole responsibility of such third party. BJC architects + assocs. inc. accepts no responsibility for damages, if any, suffered by any third party as a result of decisions made or actions based on these documents © BJC architects + assocs. inc. 2026.

No.	REVISIONS	date
02	ISSUED FOR PERMIT	2026.04.17
01	ISSUED FOR TENDER	2026.03.24

PROJECT NORTH — TRUE NORTH

scale: AS NOTED

ONTARIO ASSOCIATION OF ARCHITECTS — LICENCE 8584

drawn: VA
last worked on: 2026.03.24 by NJB
checked: B.R.J.
print date: 2026.04.17

BJC architects + assocs. inc.

client
WATERLOO REGION DISTRICT SCHOOL BOARD
51 ARDELT AVENUE
KITCHENER ONTARIO

project
CHALMERS PUBLIC SCHOOL RENOVATION
35 CHALMERS STREET SOUTH
CAMBRIDGE ONTARIO

drawing title
FLOOR FINISH PLAN & DETAILS OF CEILING PANELS

reference

project no. 25-104
client reference number

sheet no. A-112 02

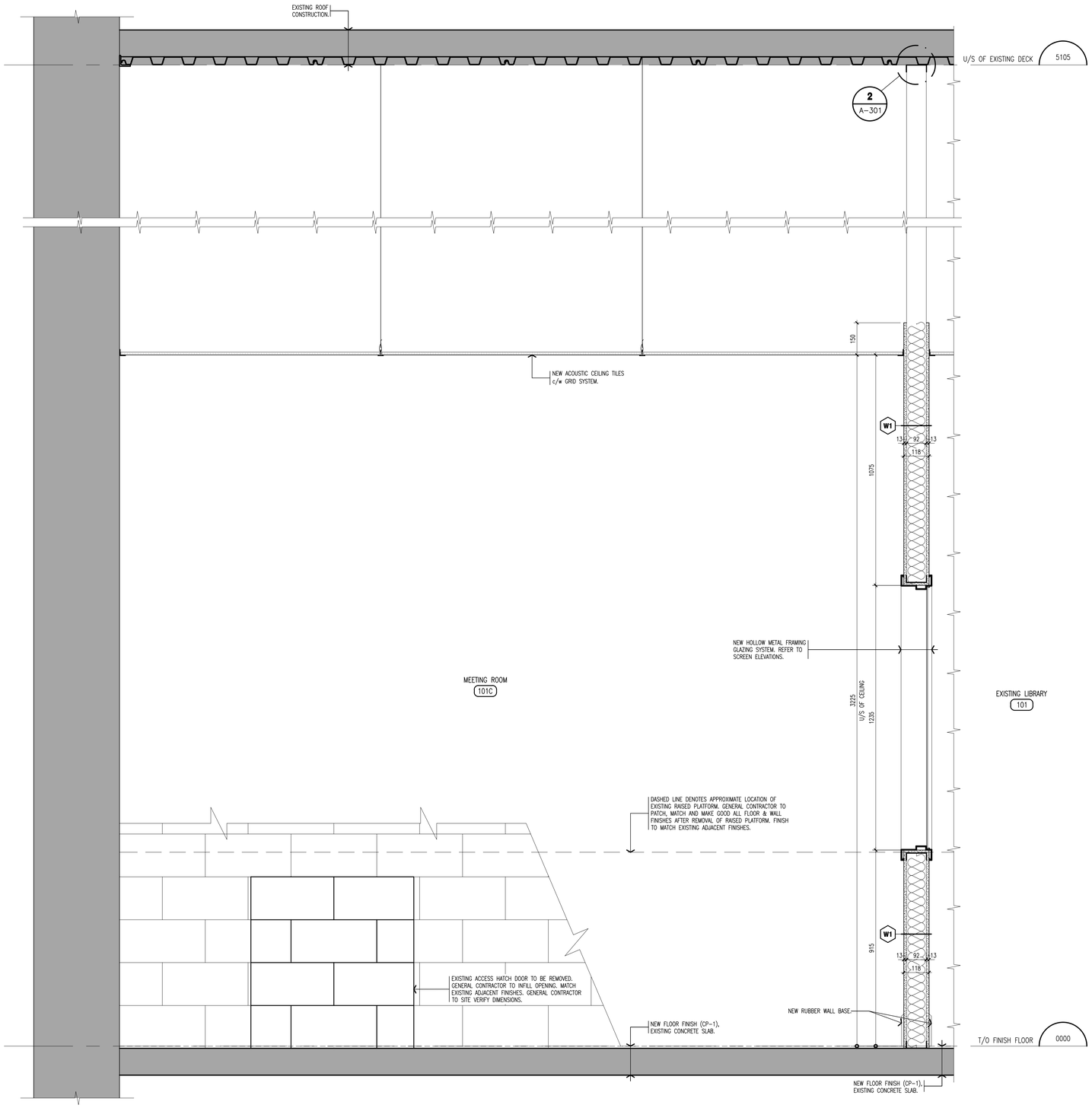

1 SECTION THROUGH NEW WINDOW IN MEETING ROOM

scale: 1:10

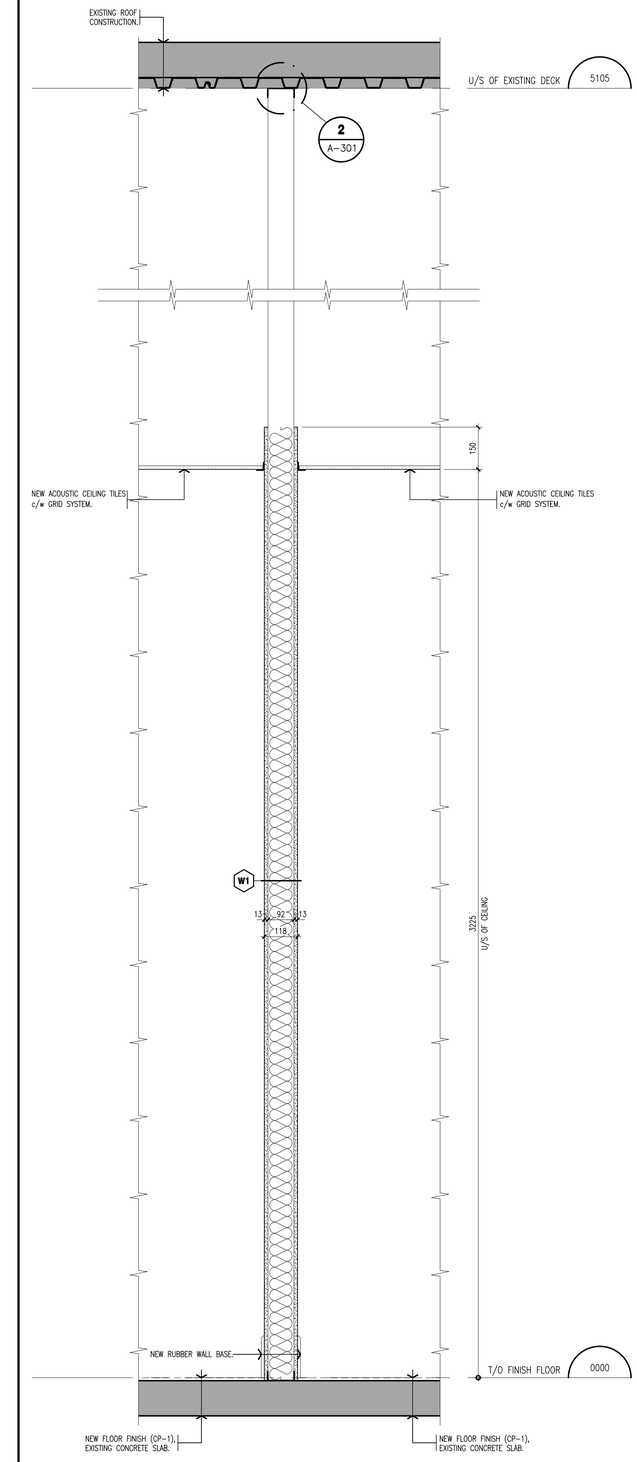

2 TYPICAL WALL SECTION THROUGH GYPSUM BOARD PARTITION

scale: 1:10

NOT THE GRANTING OF A PERMIT NOR REVIEWING OF SPECS & DRAWINGS NOR INSPECTIONS MADE DURING INSTALLATION BY THE OFFICIAL HAVING JURISDICTION SHALL RELIEVE THE OWNER FROM REQUIREMENTS OF THE ONTARIO BUILDING CODE AND ANY OTHER REFERENCED REQUIREMENTS.

Waterloo Region District School Board

NOTE:
This drawing and all associated documentation are the confidential property of BJC architects + assocs. inc. and must be returned upon request. Any duplication, reuse, revision and/or distribution in part or whole without the prior written authorization of BJC architects + assocs. inc. is strictly prohibited. Each contractor will check and verify all dimensions and report all errors and omissions to the design professional whose seal is affixed to this drawing. Do not scale this drawing.
The information and material herein reflect the best judgement of BJC architects + assocs. inc., in light of the information available to them at the time of preparation of these documents. Any use which a third party makes of these documents, or any reliance on or decisions to be made based on them, is the sole responsibility of such third party. BJC architects + assocs. inc. accepts no responsibility for damages, if any, suffered by any third party as a result of decisions made or actions based on these documents © BJC architects + assocs. inc. 2026.

No.	REVISIONS	date
02	ISSUED FOR PERMIT	2026.04.17
01	ISSUED FOR TENDER	2026.03.24

PROJECT NORTH

TRUE NORTH

scale: AS NOTED

ONTARIO ASSOCIATION OF ARCHITECTS
BRIAN J. JOHNSON
LICENCE
8984

drawn: DE
last worked on: 2026.03.24 by: NJB
checked: B.R.J.
print date: 2026.04.17

BJC architects + assocs. inc.

client
WATERLOO REGION DISTRICT SCHOOL BOARD
51 ARDELT AVENUE
KITCHENER ONTARIO

project
CHALMERS PUBLIC SCHOOL RENOVATION
35 CHALMERS STREET SOUTH
CAMBRIDGE ONTARIO

drawing title
WALL SECTIONS

reference

project no. 25-104
client reference number

sheet no. A-300 02

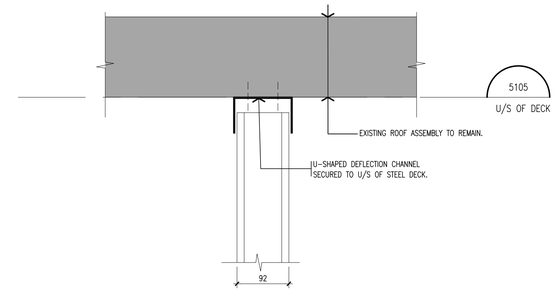

2 TYPICAL DEFLECTION TRACK DETAIL

scale: 1:5

1 RESEVED

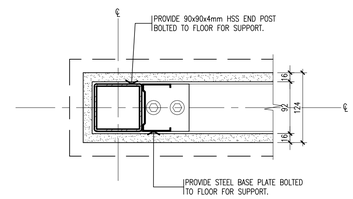

A PLAN DETAIL

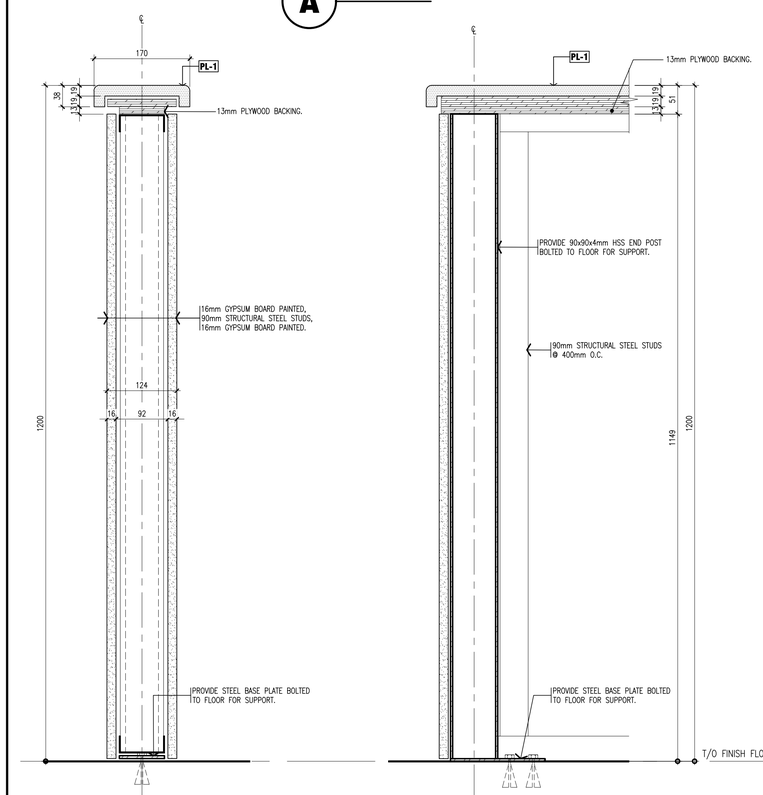

B SECTION DETAIL

C SECTION DETAIL OF STEEL ANGLE SUPPORT

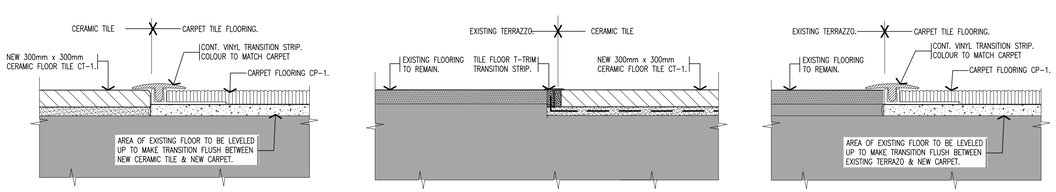

A CERAMIC TILE TO CARPET
TS-01

B EXISTING TERRAZZO TO CERAMIC TILE
TS-02

C EXISTING TERRAZZO TO CARPET
TS-03

3 FLOORING TRANSITION STRIP DETAILS

scale: 1:2

4 KNEE WALL DETAILS

scale: 1:5

NOT THE GRANTING OF A PERMIT NOR REVIEWING OF SPECS
& DRAWINGS NOR INSPECTIONS MADE DURING INSTALLATION
BY THE OFFICIAL HAVING JURISDICTION SHALL RELIEVE THE
OWNER FROM REQUIREMENTS OF THE ONTARIO BUILDING
CODE AND ANY OTHER REFERENCED REQUIREMENTS.

Waterloo Region District School Board

NOTE:
This drawing and all associated documentation are the confidential property of BJC architects + assocs. inc. and must be returned upon request. Any duplication, reuse, revision and/or distribution in part or whole without the prior written authorization of BJC architects + assocs. inc. is strictly prohibited. Each contractor will check and verify all dimensions and report all errors and omissions to the design professional whose seal is affixed to this drawing. Do not scale this drawing.
The information and material herein reflect the best judgement of BJC architects + assocs. inc., in light of the information available to them at the time of preparation of these documents. Any use which a third party makes of these documents, or any reliance on or decisions to be made based on them, is the sole responsibility of such third party. BJC architects + assocs. inc. accepts no responsibility for damages, if any, suffered by any third party as a result of decisions made or actions based on these documents © BJC architects + assocs. inc. 2026.

No.	REVISIONS	date
02	ISSUED FOR PERMIT	2026.04.17
01	ISSUED FOR TENDER	2026.03.24

PROJECT NORTH

TRUE NORTH

scale AS NOTED

ONTARIO ASSOCIATION OF ARCHITECTS
BRIAN R. JOHNSON
LICENCE
8884

drawn DE
last worked on 2026.03.11 by NJB
checked B.R.J.
print date 2026.04.17

BJC architects + assocs. inc.

client
WATERLOO REGION DISTRICT SCHOOL BOARD
51 ARDELT AVENUE
KITCHENER ONTARIO

project
CHALMERS PUBLIC SCHOOL RENOVATION
35 CHALMERS STREET SOUTH
CAMBRIDGE ONTARIO

drawing title
WALL SECTIONS & DETAILS

reference

project no. 25-104
client reference number

sheet no. A-301 02

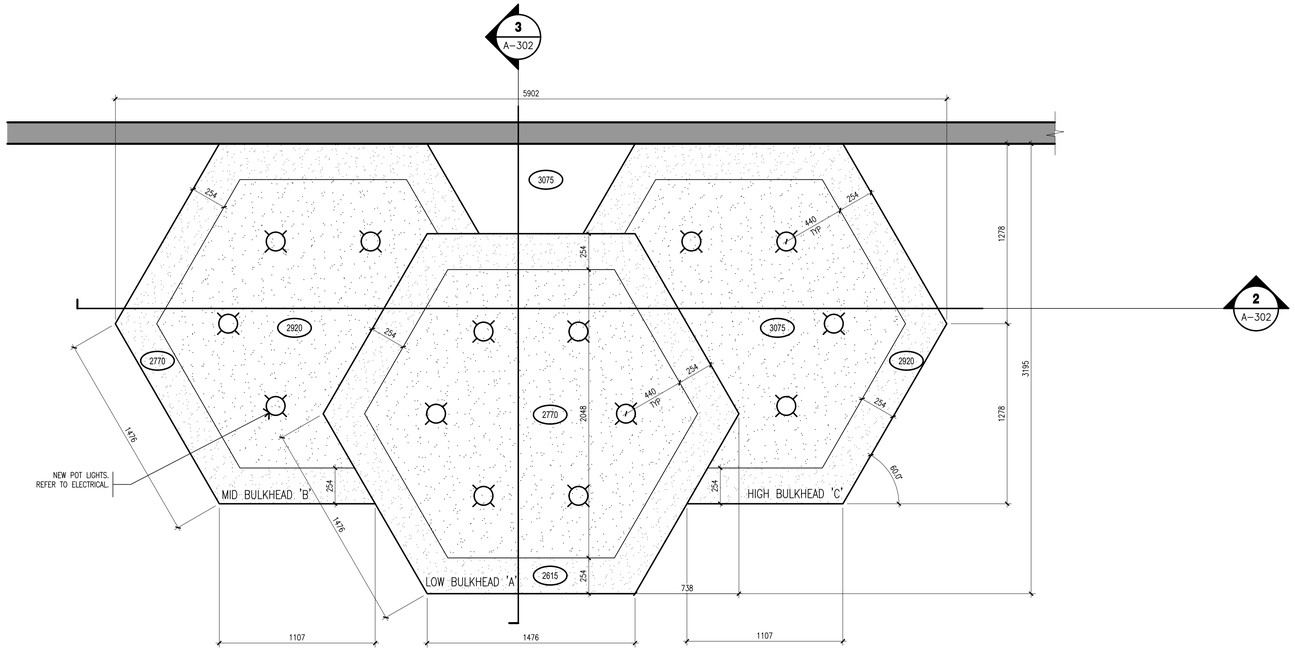

1 PLAN DETAIL at BULKHEAD

scale: 1:20

LEGEND

- EXISTING WALL.
- XXXX — CEILING ELEVATION MARKER ABOVE FINISHED LEVEL.
- LIGHT FIXTURE. (REFER TO ELECTRICAL DRAWINGS).
- NEW GYPSUM BOARD CEILING.

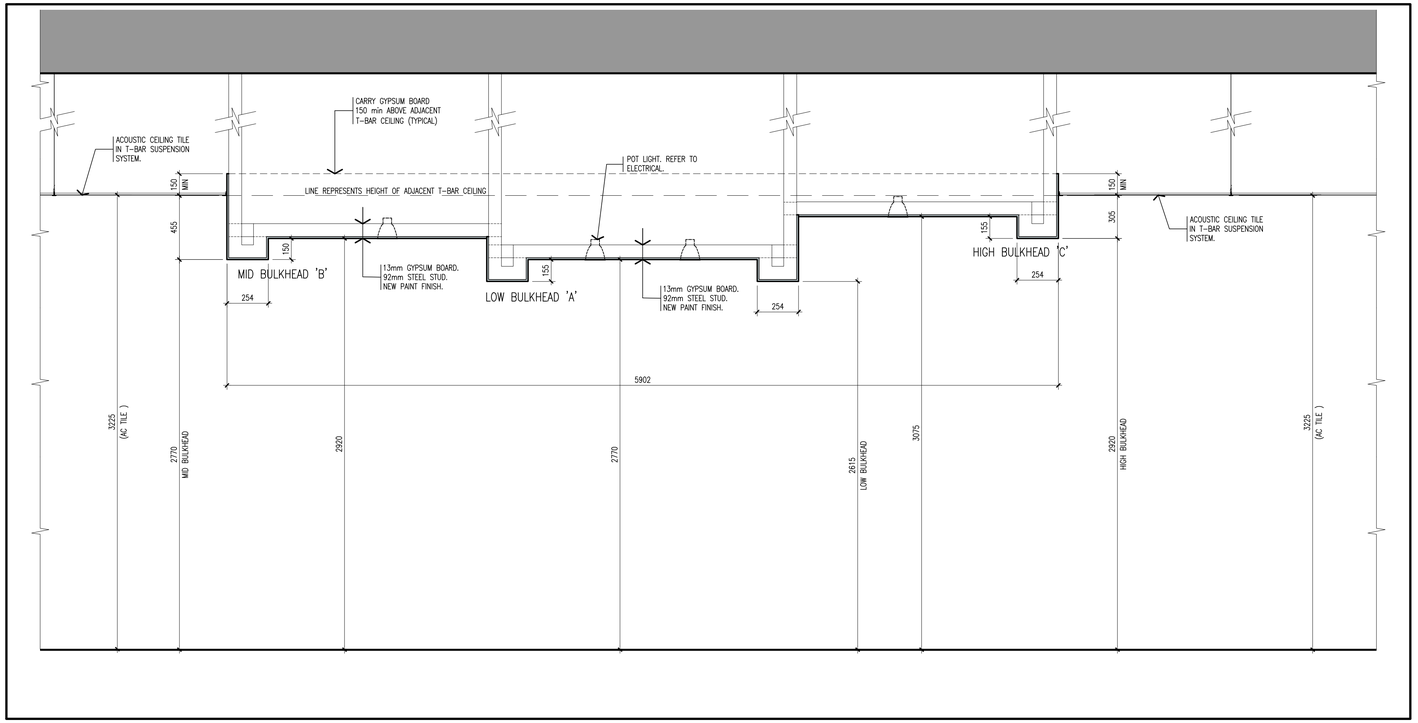

2 LONG SECTION thru BULKHEAD

scale: 1:20

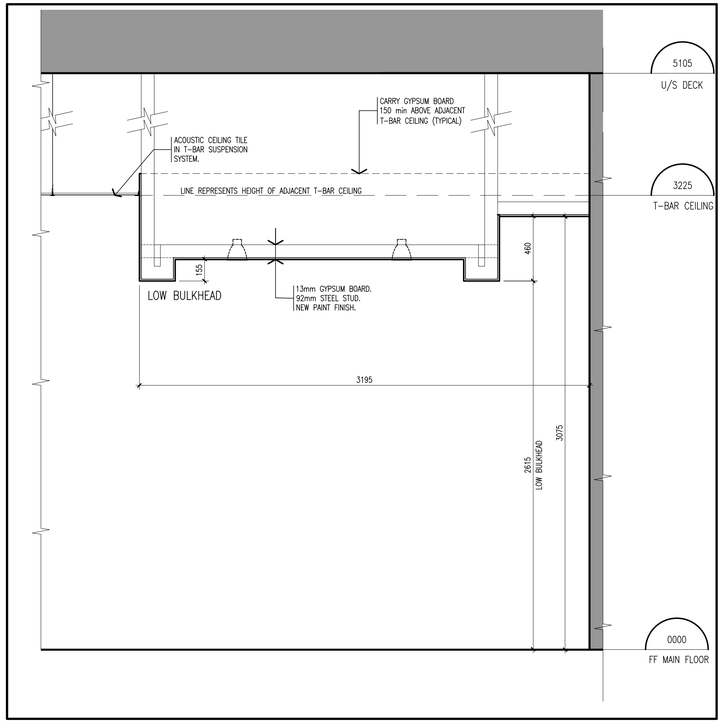

3 SECTION thru BULKHEAD

scale: 1:20

NOT THE GRANTING OF A PERMIT NOR REVIEWING OF SPECS & DRAWINGS NOR INSPECTIONS MADE DURING INSTALLATION BY THE OFFICIAL HAVING JURISDICTION SHALL RELIEVE THE OWNER FROM REQUIREMENTS OF THE ONTARIO BUILDING CODE AND ANY OTHER REFERENCED REQUIREMENTS.

Waterloo Region District School Board

NOTE:
This drawing and all associated documentation are the confidential property of BJC architects + assocs. inc. and must be returned upon request. Any duplication, reuse, revision and/or distribution in part or whole without the prior written authorization of BJC architects + assocs. inc. is strictly prohibited. Each contractor will check and verify all dimensions and report all errors and omissions to the design professional whose seal is affixed to this drawing. Do not scale this drawing.
The information and material herein reflect the best judgement of BJC architects + assocs. inc., in light of the information available to them at the time of preparation of these documents. Any use which a third party makes of these documents, or any reliance on or decisions to be made based on them, is the sole responsibility of such third party. BJC architects + assocs. inc. accepts no responsibility for damages, if any, suffered by any third party as a result of decisions made or actions based on these documents © BJC architects + assocs. inc. 2026.

No.	REVISIONS	date
02	ISSUED FOR PERMIT	2026.04.17
01	ISSUED FOR TENDER	2026.03.24

PROJECT NORTH

TRUE NORTH

scale: AS NOTED

ONTARIO ASSOCIATION OF ARCHITECTS
BARRY R. JOHNSON
LICENCE
8984

drawn: VA
last worked on: 2026.03.10 by: VA
checked: B.R.J.
print date: 2026.04.17

BJC architects + assocs. inc.

client
WATERLOO REGION DISTRICT SCHOOL BOARD
51 ARDELT AVENUE
KITCHENER ONTARIO

project
CHALMERS PUBLIC SCHOOL RENOVATION
35 CHALMERS STREET SOUTH
CAMBRIDGE ONTARIO

drawing title
BULKHEAD DETAILS

reference

project no. 25-104
client reference number

sheet no. A-302 02

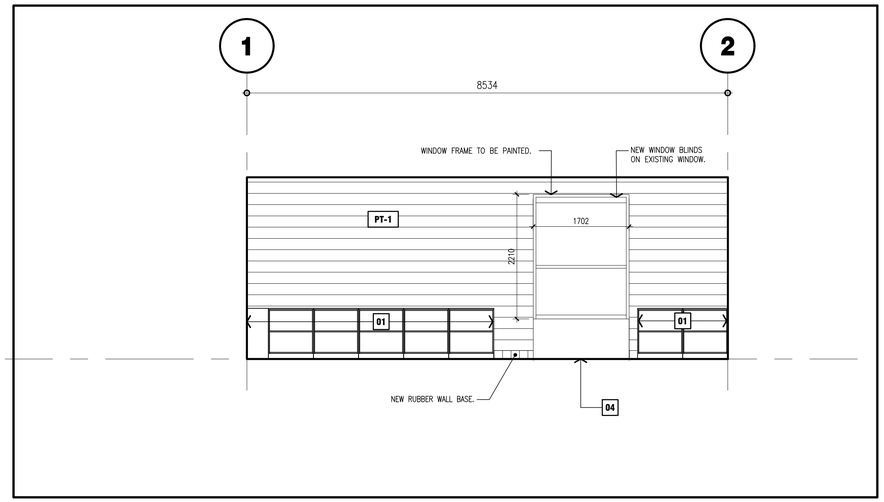

1 NORTH INTERIOR ELEVATION

scale: 1:50

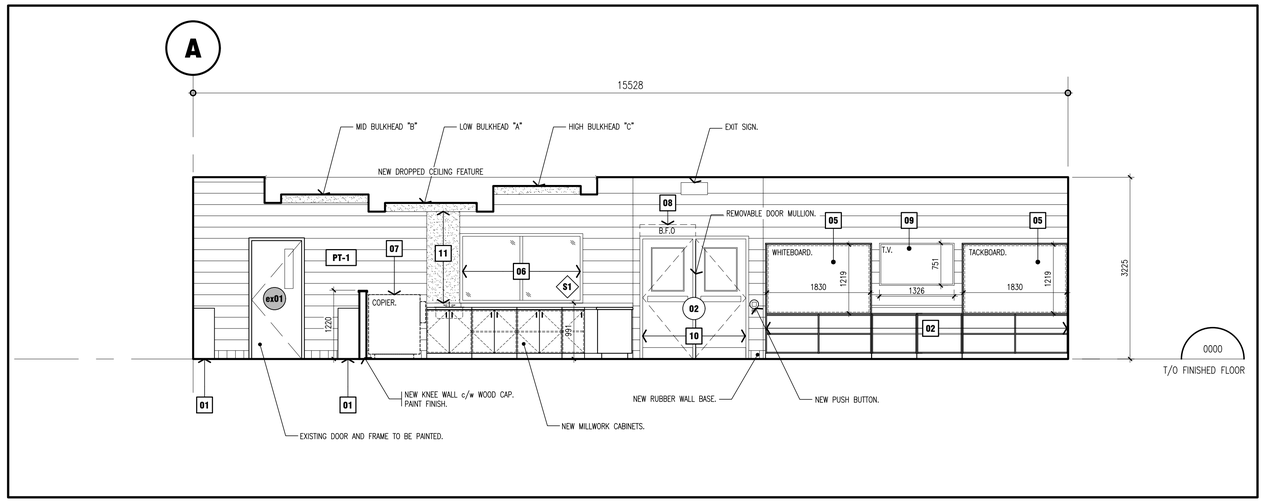

2 EAST INTERIOR ELEVATION

scale: 1:50

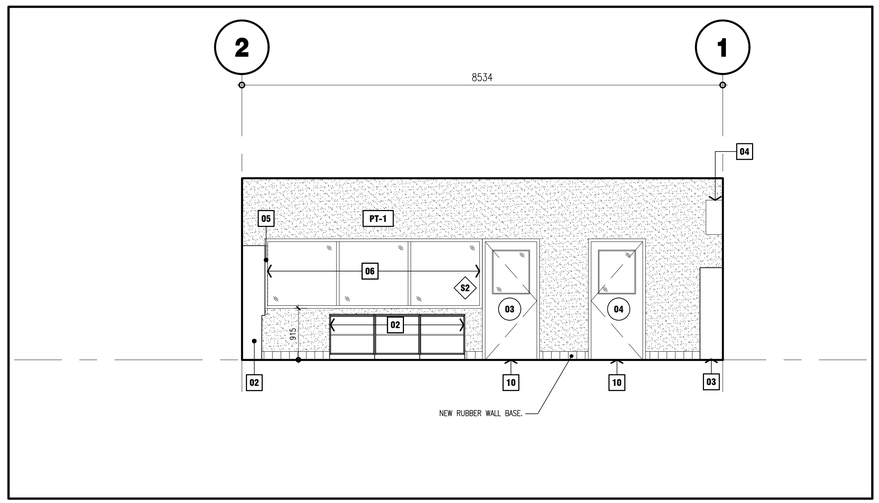

3 SOUTH INTERIOR ELEVATION

scale: 1:50

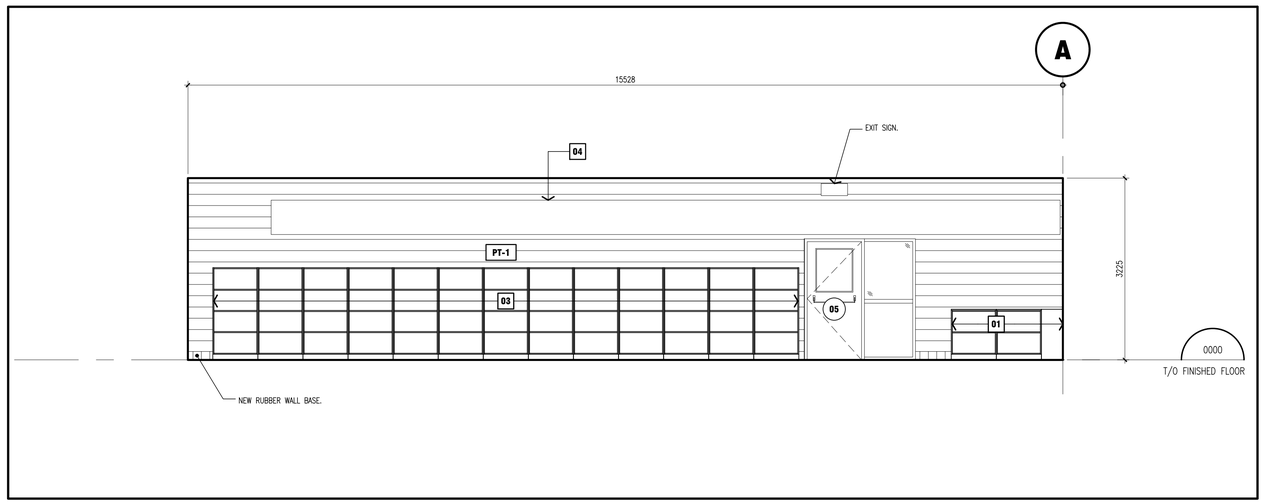

4 WEST INTERIOR ELEVATION

scale: 1:50

LEGEND:

NEW STUD WALL.

EXISTING BLOCK WALL.

NEW RUBBER WALL BASE.

NOT THE GRANTING OF A PERMIT NOR REVIEWING OF SPECS & DRAWINGS NOR INSPECTIONS MADE DURING INSTALLATION BY THE OFFICIAL HAVING JURISDICTION SHALL RELIEVE THE OWNER FROM REQUIREMENTS OF THE ONTARIO BUILDING CODE AND ANY OTHER REFERENCED REQUIREMENTS.

RENOVATION NOTES:

- 01 PICTURE BOOK SHELVING. 14" INTERIOR SHELVING HEIGHT.
- 02 FICTION/STANDARD BOOK SHELVING. 12" INTERIOR SHELVING HEIGHT.
- 03 NON-FICTION BOOK SHELVING. 14" INTERIOR SHELVING HEIGHT.
- 04 EXISTING RADIATOR TO REMAIN AND TO BE PAINTED.
- 05 NEW WHITEBOARD/TACKBOARD. SUPPLIED AND INSTALLED BY GC.
- 06 NEW HOLLOW METAL GLAZING SCREEN.
- 07 EXISTING COPIER RELOCATED. SUPPLIED BY OWNER.
- 08 BARRIER FREE DOOR OPERATOR. REFER TO ELECTRICAL DRAWINGS.
- 09 NEW TV SUPPLIED BY OWNER & INSTALLED BY GC.
- 10 NEW HOLLOW METAL DOOR. FRAME AND DOOR TO BE PAINTED.
- 11 NEW PIPE CHASE – 13mm GYPSUM BOARD ON STUD FRAMING.

GENERAL NOTES:

1. CONTRACTOR MUST VERIFY ALL DIMENSIONS AND BE RESPONSIBLE FOR THE SAME. REPORT ANY ERRORS OR OMISSIONS TO THE ARCHITECT IN WRITING PRIOR TO COMMENCING WITH THE WORK. PRINTS ARE NOT TO BE SCALED.
2. THIS DRAWING IS TO BE READ IN CONJUNCTION WITH ALL OTHER ARCHITECTURAL, MECHANICAL & ELECTRICAL DRAWINGS FOR A COMPLETE SCOPE OF WORK.

Waterloo Region District School Board

NOTE:
This drawing and all associated documentation are the confidential property of BJC architects + assocs. inc. and must be returned upon request. Any duplication, reuse, revision and/or distribution in part or whole without the prior written authorization of BJC architects + assocs. inc. is strictly prohibited. Each contractor will check and verify all dimensions and report all errors and omissions to the design professional whose seal is affixed to this drawing. Do not scale this drawing.
The information and material herein reflect the best judgement of BJC architects + assocs. inc., in light of the information available to them at the time of preparation of these documents. Any use which a third party makes of these documents, or any reliance on or decisions to be made based on them, is the sole responsibility of such third party. BJC architects + assocs. inc. accepts no responsibility for damages, if any, suffered by any third party as a result of decisions made or actions based on these documents © BJC architects + assocs. inc. 2026.

No.	REVISIONS	date
02	ISSUED FOR PERMIT	2026.04.17
01	ISSUED FOR TENDER	2026.03.24

PROJECT NORTH

TRUE NORTH

scale: AS NOTED

ONTARIO ASSOCIATION OF ARCHITECTS — BRIAN R. JOHNSON — LICENCE 5084

drawn	VA
last worked on	2026.03.23
by	VA
checked	B.R.J.
print date	2026.04.17

BJC architects + assocs. inc.

client
WATERLOO REGION DISTRICT SCHOOL BOARD
51 ARDELT AVENUE
KITCHENER ONTARIO

project
CHALMERS PUBLIC SCHOOL RENOVATION
35 CHALMERS STREET SOUTH
CAMBRIDGE ONTARIO

drawing title
LIBRARY INTERIOR RENOVATION ELEVATIONS

reference

project no. 25-104

client reference number

sheet no. A-500 02

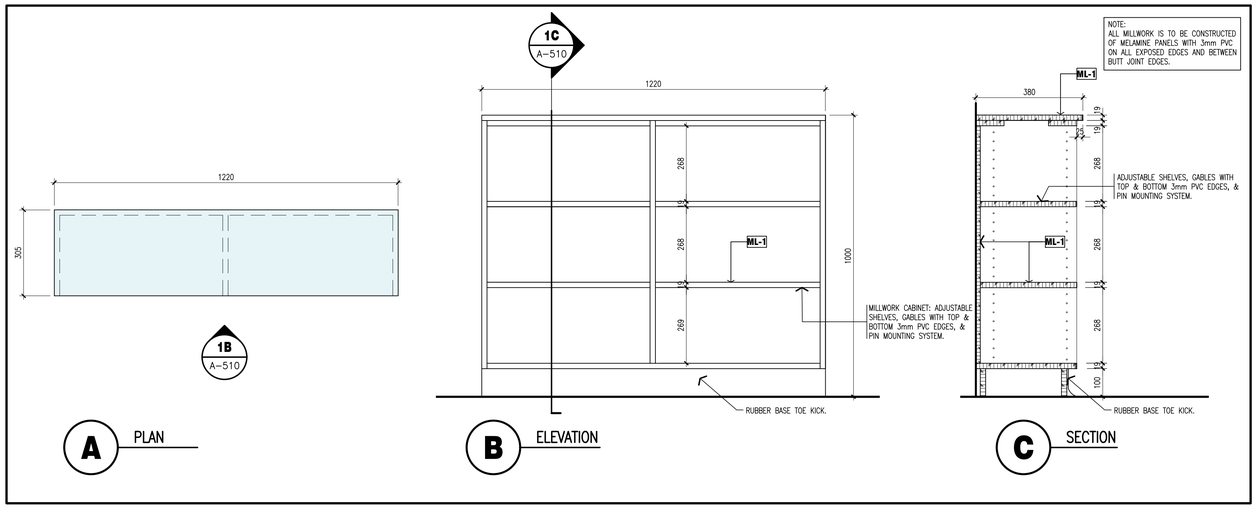

1 MEETING ROOM 101C SHELVING DETAILS

scale: 1:10

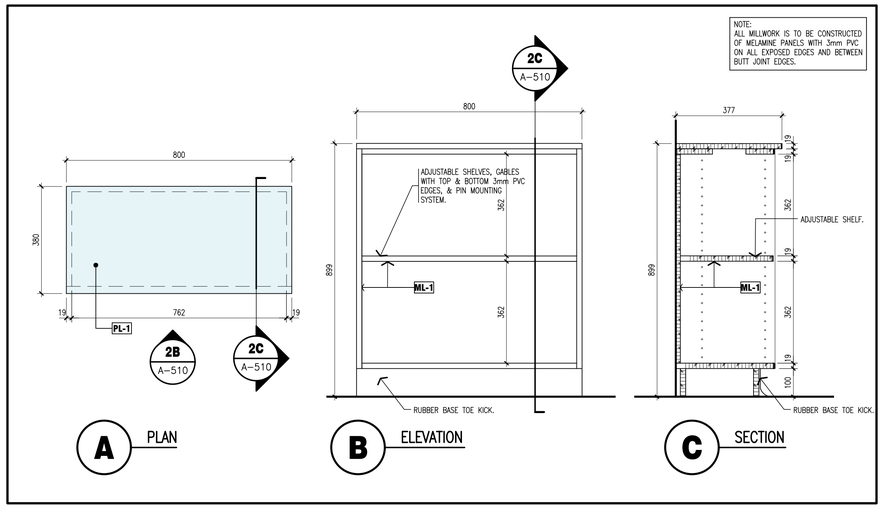

2 PICTURE BOOK UNIT DETAILS

scale: 1:10

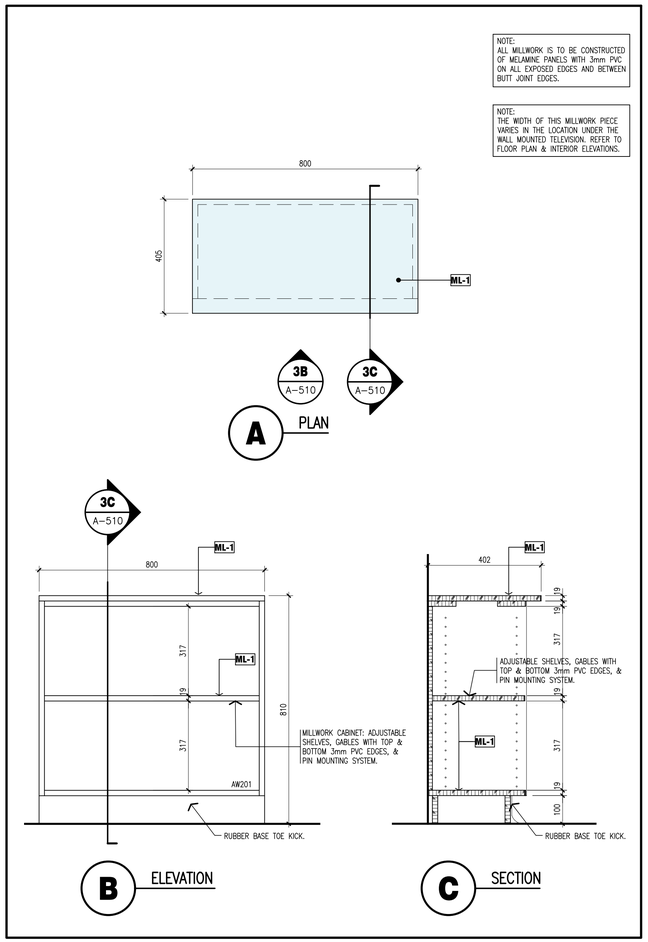

3 SHORT BOOKSHELF DETAILS

scale: 1:10

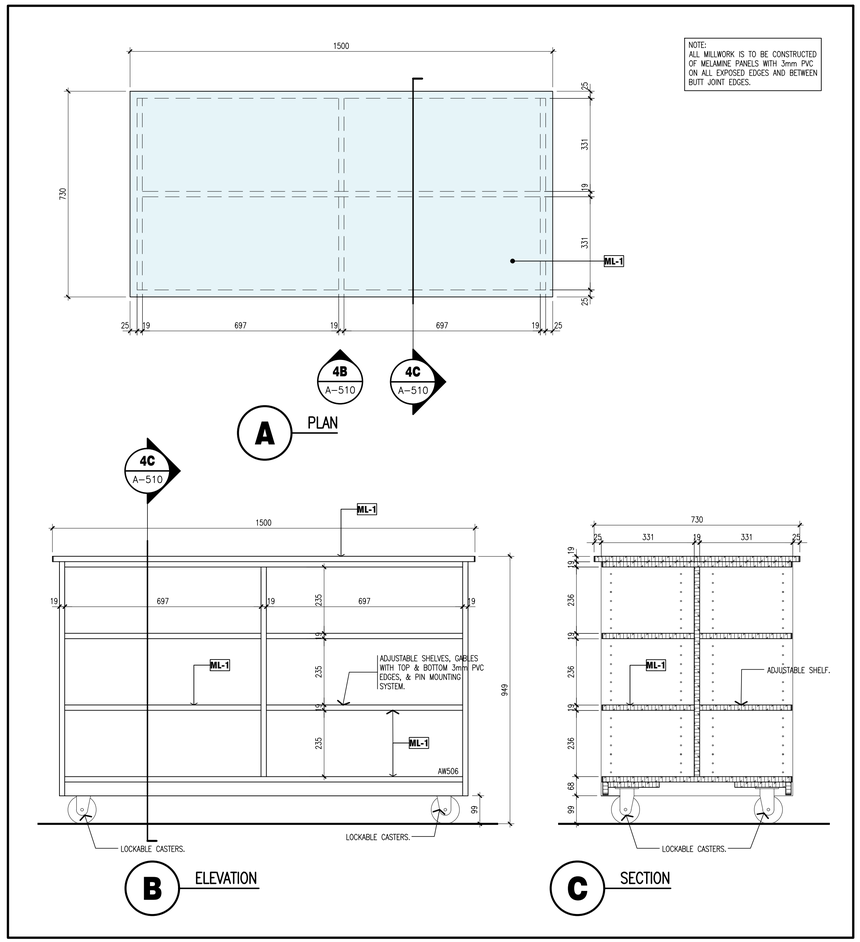

4 LARGE BOOK CART DETAILS

scale: 1:10

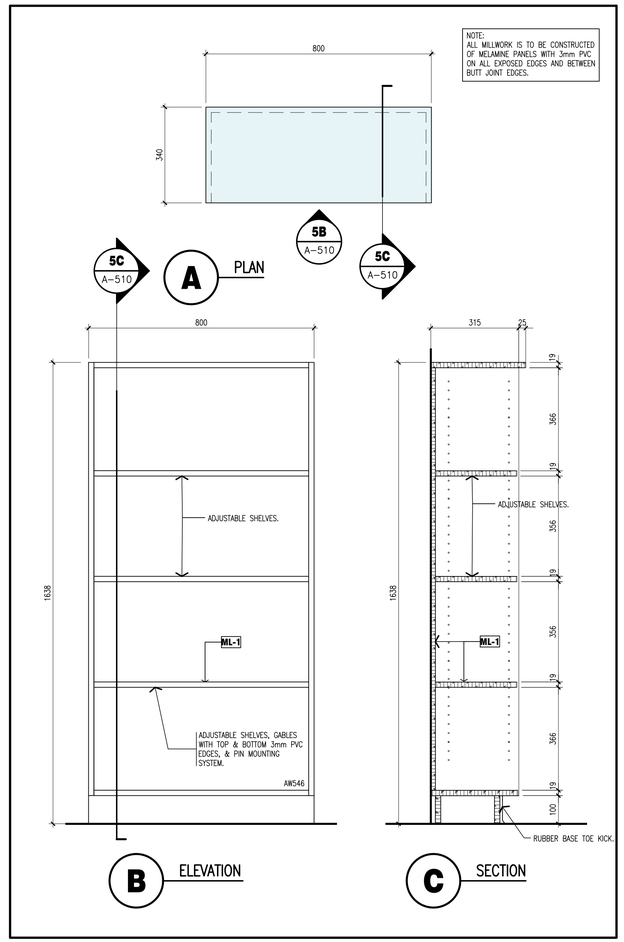

5 TALL BOOKSHELF DETAILS

scale: 1:10

NOT THE GRANTING OF A PERMIT NOR REVIEWING OF SPECS & DRAWINGS NOR INSPECTIONS MADE DURING INSTALLATION BY THE OFFICIAL HAVING JURISDICTION SHALL RELIEVE THE OWNER FROM REQUIREMENTS OF THE ONTARIO BUILDING CODE AND ANY OTHER REFERENCED REQUIREMENTS.

Waterloo Region District School Board

NOTE:
This drawing and all associated documentation are the confidential property of BJC architects + assocs. inc. and must be returned upon request. Any duplication, reuse, revision and/or distribution in part or whole without the prior written authorization of BJC architects + assocs. inc. is strictly prohibited. Each contractor will check and verify all dimensions and report all errors and omissions to the design professional whose seal is affixed to this drawing. Do not scale this drawing.
The information and material herein reflect the best judgement of BJC architects + assocs. inc., in light of the information available to them at the time of preparation of these documents. Any use which a third party makes of these documents, or any reliance on or decisions to be made based on them, is the sole responsibility of such third party. BJC architects + assocs. inc. accepts no responsibility for damages, if any, suffered by any third party as a result of decisions made or actions based on these documents © BJC architects + assocs. inc. 2026.

No.	REVISIONS	date
02	ISSUED FOR PERMIT	2026.04.17
01	ISSUED FOR TENDER	2026.03.24

PROJECT NORTH

TRUE NORTH

scale AS NOTED

ONTARIO ASSOCIATION OF ARCHITECTS
LICENCE 8584

drawn	NJB
last worked on	2026.03.20
by	VA
checked	B.R.J.
print date	2026.04.17

BJC architects + assocs. inc.

client
WATERLOO REGION DISTRICT SCHOOL BOARD
51 ARDELT AVENUE
KITCHENER ONTARIO

project
CHALMERS PUBLIC SCHOOL RENOVATION
35 CHALMERS STREET SOUTH
CAMBRIDGE ONTARIO

drawing title
MILLWORK DETAILS

reference

project no. 25-104

client reference number

sheet no. A-510 02

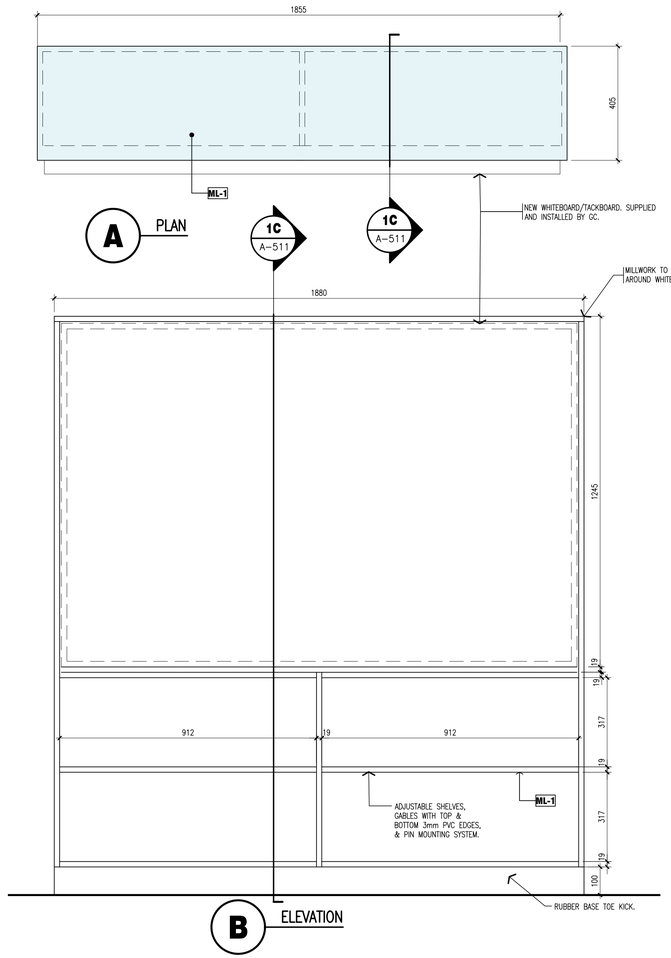

NOTE:
ALL MILLWORK IS TO BE CONSTRUCTED OF MELAMINE PANELS WITH 3mm PVC ON ALL EXPOSED EDGES AND BETWEEN BUTT JOINT EDGES.

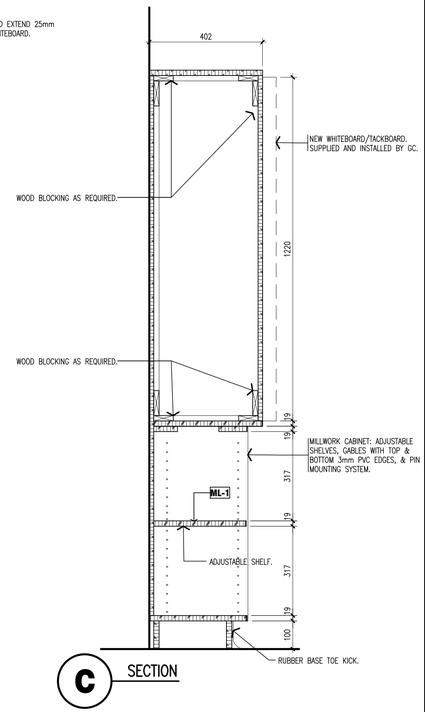

1 WHITEBOARD MILLWORK DETAILS

scale: 1:10

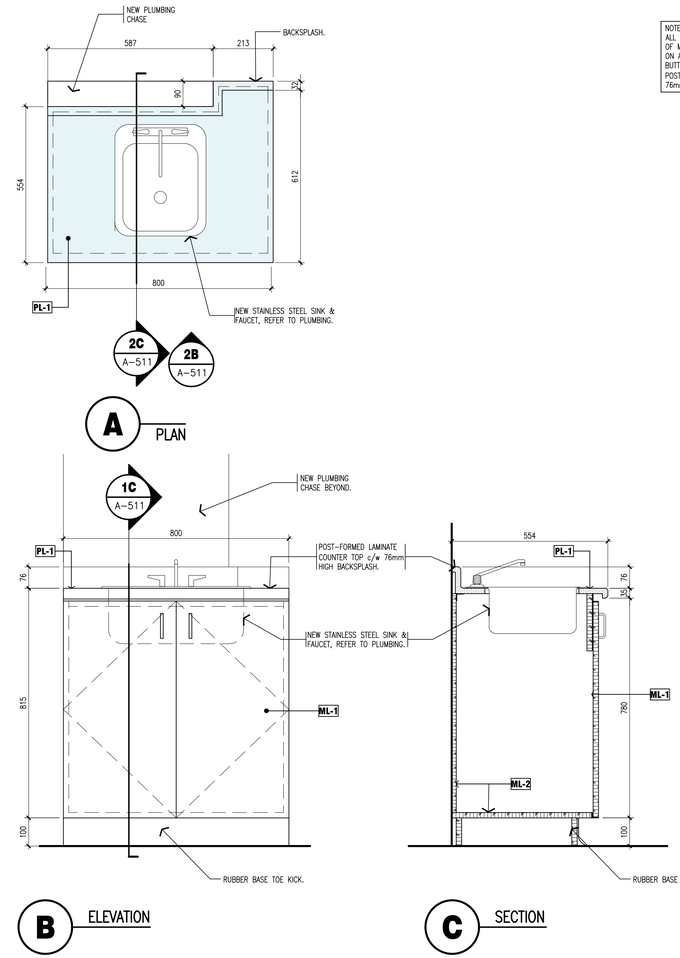

NOTE:
ALL MILLWORK IS TO BE CONSTRUCTED OF MELAMINE PANELS WITH 3mm PVC ON ALL EXPOSED EDGES AND BETWEEN BUTT JOINT EDGES. COUNTERTOP TO BE POST FORMED PLASTIC LAMINATE c/w 76mm HIGH BACKSPLASH ON STOCK.

2 CIRCULATION DESK BACK MILLWORK DETAILS @ SINK UNIT

scale: 1:10

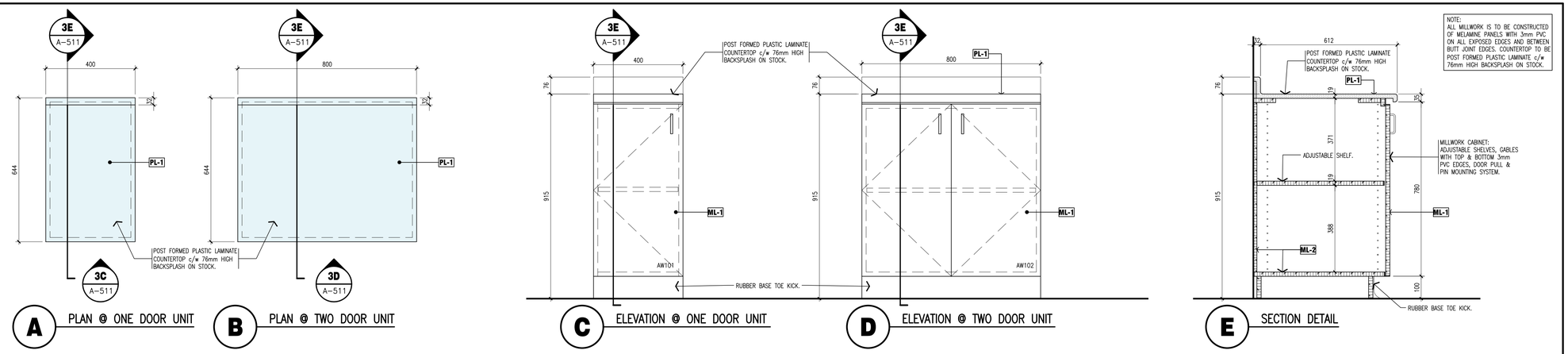

NOTE:
ALL MILLWORK IS TO BE CONSTRUCTED OF MELAMINE PANELS WITH 3mm PVC ON ALL EXPOSED EDGES AND BETWEEN BUTT JOINT EDGES. COUNTERTOP TO BE POST FORMED PLASTIC LAMINATE c/w 76mm HIGH BACKSPLASH ON STOCK.

3 CIRCULATION DESK BACK MILLWORK DETAILS

scale: 1:10

NOT THE GRANTING OF A PERMIT NOR REVIEWING OF SPECS & DRAWINGS NOR INSPECTIONS MADE DURING INSTALLATION BY THE OFFICIAL HAVING JURISDICTION SHALL RELIEVE THE OWNER FROM REQUIREMENTS OF THE ONTARIO BUILDING CODE AND ANY OTHER REFERENCED REQUIREMENTS.

Waterloo Region District School Board

NOTE:
This drawing and all associated documentation are the confidential property of BJC architects + assocs. inc. and must be returned upon request. Any duplication, reuse, revision and/or distribution in part or whole without the prior written authorization of BJC architects + assocs. inc. is strictly prohibited. Each contractor will check and verify all dimensions and report all errors and omissions to the design professional whose seal is affixed to this drawing. Do not scale this drawing.
The information and material herein reflect the best judgement of BJC architects + assocs. inc., in light of the information available to them at the time of preparation of these documents. Any use which a third party makes of these documents, or any reliance on or decisions to be made based on them, is the sole responsibility of such third party. BJC architects + assocs. inc. accepts no responsibility for damages, if any, suffered by any third party as a result of decisions made or actions based on these documents © BJC architects + assocs. inc. 2026.

No.	REVISIONS	date
02	ISSUED FOR PERMIT	2026.04.17
01	ISSUED FOR TENDER	2026.03.24

PROJECT NORTH

TRUE NORTH

scale: AS NOTED

ONTARIO ASSOCIATION OF ARCHITECTS
JOHN W. JOHNSON
LICENCE
8984

drawn: NJB
last worked on: 2026.03.20 by: VA
checked: B.R.J.
print date: 2026.04.17

BJC architects + assocs. inc.

client
WATERLOO REGION DISTRICT SCHOOL BOARD
51 ARDELT AVENUE
KITCHENER ONTARIO

project
CHALMERS PUBLIC SCHOOL RENOVATION
35 CHALMERS STREET SOUTH
CAMBRIDGE ONTARIO

drawing title
MILLWORK DETAILS

reference

project no. 25-104
client reference number

sheet no. A-511 02

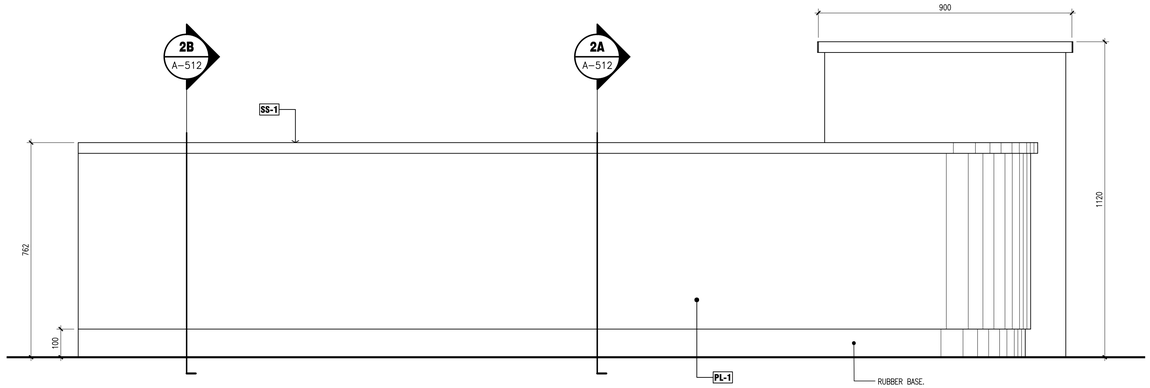

A WEST ELEVATION

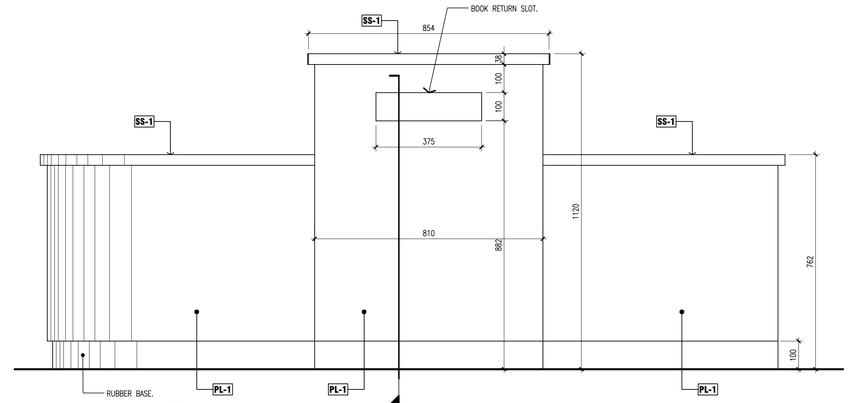

B SOUTH ELEVATION

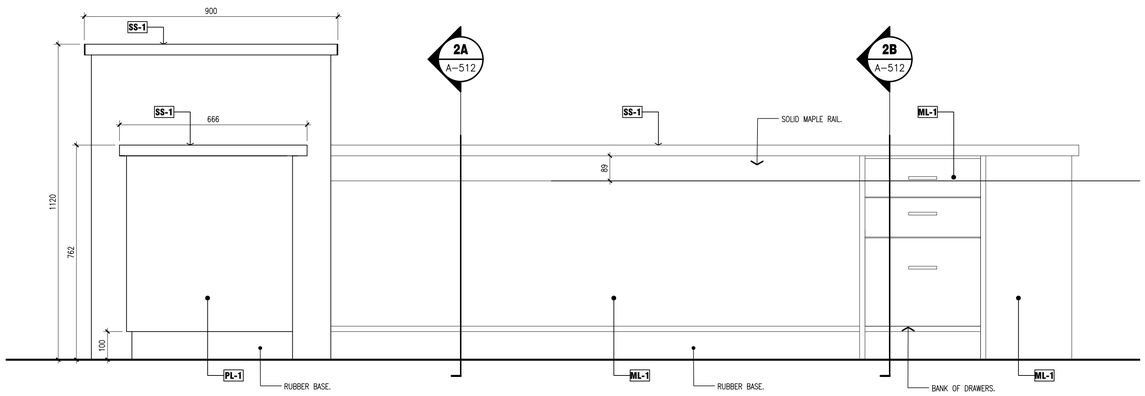

C EAST ELEVATION

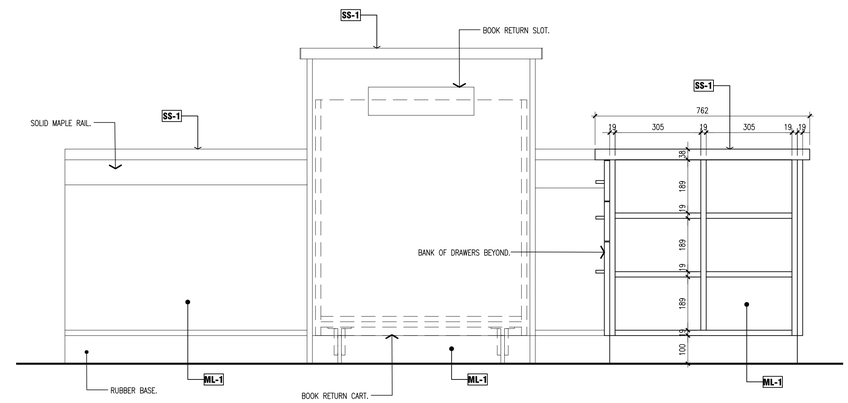

D NORTH ELEVATION

NOTE:
ALL MILLWORK IS TO BE CONSTRUCTED OF MELAMINE PANELS WITH 3mm PVC ON ALL EXPOSED EDGES AND BETWEEN BUTT JOINT EDGES.

1 CIRCULATION DESK ELEVATION DETAILS

scale: 1:10

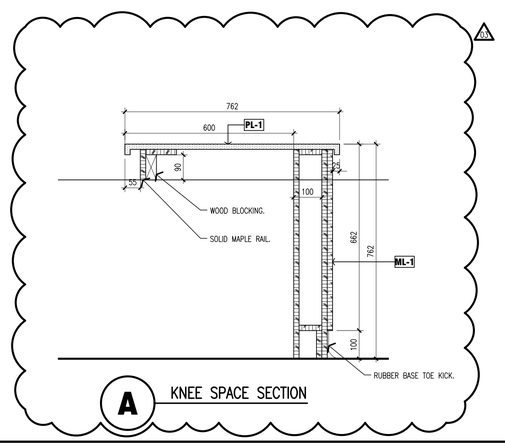

A KNEE SPACE SECTION

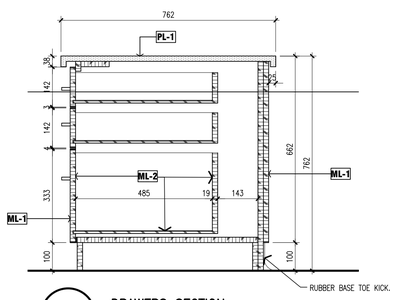

B DRAWERS SECTION

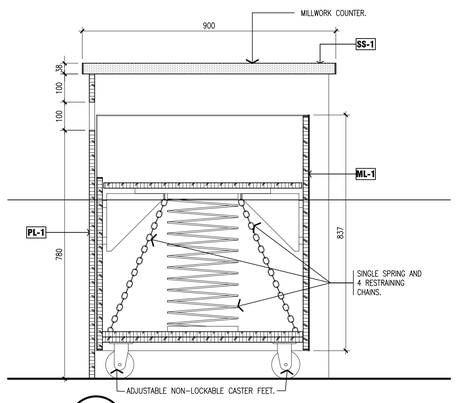

C BOOK RETURN CART SECTION

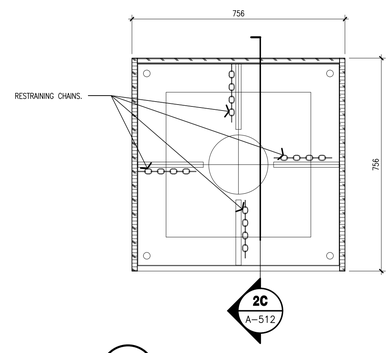

D BOOK RETURN CART PLAN

NOTE:
ALL MILLWORK IS TO BE CONSTRUCTED OF MELAMINE PANELS WITH 3mm PVC ON ALL EXPOSED EDGES AND BETWEEN BUTT JOINT EDGES.

2 CIRCULATION DESK SECTION AND PLAN DETAILS & BOOK CART DETAILS

scale: 1:10

NOT THE GRANTING OF A PERMIT NOR REVIEWING OF SPECS & DRAWINGS NOR INSPECTIONS MADE DURING INSTALLATION BY THE OFFICIAL HAVING JURISDICTION SHALL RELIEVE THE OWNER FROM REQUIREMENTS OF THE ONTARIO BUILDING CODE AND ANY OTHER REFERENCED REQUIREMENTS.

Waterloo Region District School Board

NOTE:
This drawing and all associated documentation are the confidential property of BJC architects + assocs. inc. and must be returned upon request. Any duplication, reuse, revision and/or distribution in part or whole without the prior written authorization of BJC architects + assocs. inc. is strictly prohibited. Each contractor will check and verify all dimensions and report all errors and omissions to the design professional whose seal is affixed to this drawing. Do not scale this drawing.
The information and material herein reflect the best judgement of BJC architects + assocs. inc., in light of the information available to them at the time of preparation of these documents. Any use which a third party makes of these documents, or any reliance on or decisions to be made based on them, is the sole responsibility of such third party. BJC architects + assocs. inc. accepts no responsibility for damages, if any, suffered by any third party as a result of decisions made or actions based on these documents © BJC architects + assocs. inc. 2026.

No.	REVISIONS	date
03	RE-ISSUED FOR PERMIT	2026.06.01
02	ISSUED FOR PERMIT	2026.04.17
01	ISSUED FOR TENDER	2026.03.24

PROJECT NORTH

TRUE NORTH

scale: AS NOTED

ONTARIO ASSOCIATION OF ARCHITECTS
JOHN A. BOMBSON
LICENCE
8884

drawn: NJB
last worked on: 2026.03.23 by VA
checked: B.R.J.
print date: 2026.04.17

BJC architects + assocs. inc.

client
WATERLOO REGION DISTRICT SCHOOL BOARD
51 ARDELT AVENUE
KITCHENER ONTARIO

project
CHALMERS PUBLIC SCHOOL RENOVATION
35 CHALMERS STREET SOUTH
CAMBRIDGE ONTARIO

drawing title
MILLWORK DETAILS

reference

project no. 25-104

client reference number

sheet no. A-512 03

1 RESERVED

2 RESERVED

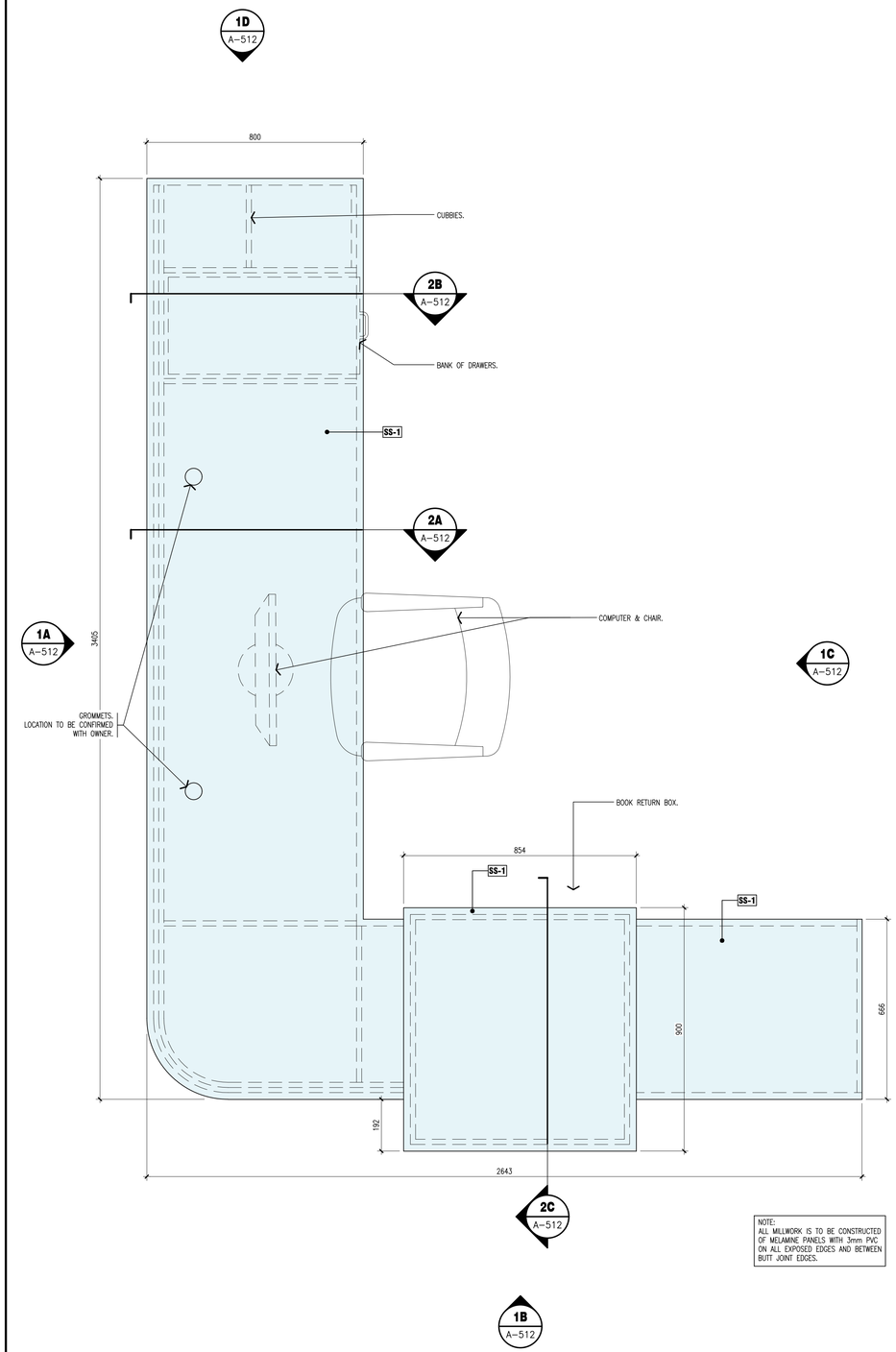

NOTE:
ALL MILLWORK IS TO BE CONSTRUCTED OF MELAMINE PANELS WITH 3mm PVC ON ALL EXPOSED EDGES AND BETWEEN BUTT JOINT EDGES.

3 CIRCULATION DESK PLAN DETAIL

scale: 1:10

NOT THE GRANTING OF A PERMIT NOR REVIEWING OF SPECS & DRAWINGS NOR INSPECTIONS MADE DURING INSTALLATION BY THE OFFICIAL HAVING JURISDICTION SHALL RELIEVE THE OWNER FROM REQUIREMENTS OF THE ONTARIO BUILDING CODE AND ANY OTHER REFERENCED REQUIREMENTS.

Waterloo Region District School Board

NOTE:
This drawing and all associated documentation are the confidential property of BJC architects + assocs. inc. and must be returned upon request. Any duplication, reuse, revision and/or distribution in part or whole without the prior written authorization of BJC architects + assocs. inc. is strictly prohibited. Each contractor will check and verify all dimensions and report all errors and omissions to the design professional whose seal is affixed to this drawing. Do not scale this drawing.
The information and material herein reflect the best judgement of BJC architects + assocs. inc., in light of the information available to them at the time of preparation of these documents. Any use which a third party makes of these documents, or any reliance on or decisions to be made based on them, is the sole responsibility of such third party. BJC architects + assocs. inc. accepts no responsibility for damages, if any, suffered by any third party as a result of decisions made or actions based on these documents © BJC architects + assocs. inc. 2026.

No.	REVISIONS	date
02	ISSUED FOR PERMIT	2026.04.17
01	ISSUED FOR TENDER	2026.03.24

PROJECT NORTH

TRUE NORTH

scale AS NOTED

ONTARIO ASSOCIATION OF ARCHITECTS
BARRY J. JOHNSON
LICENCE
8584

drawn NJB
last worked on 2026.03.23 by MV
checked B.R.J.
print date 2026.04.17

BJC architects + assocs. inc.

client
WATERLOO REGION DISTRICT SCHOOL BOARD
51 ARDELT AVENUE
KITCHENER ONTARIO

project
CHALMERS PUBLIC SCHOOL RENOVATION
35 CHALMERS STREET SOUTH
CAMBRIDGE ONTARIO

drawing title
MILLWORK DETAILS

reference

project no. 25-104
client reference number

sheet no. A-513 02

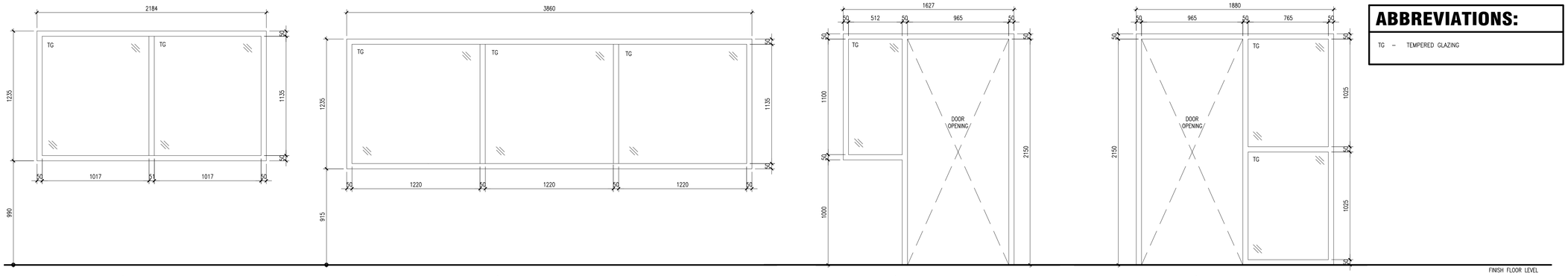

ABBREVIATIONS:

TG – TEMPERED GLAZING

1 SCREEN ELEVATIONS

scale: 1:5

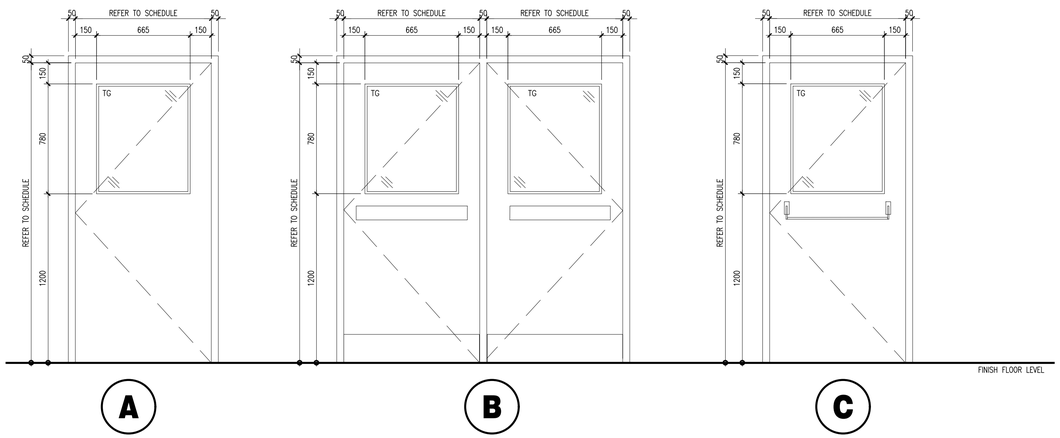

ABBREVIATIONS:

TG – TEMPERED GLAZING

2 DOOR ELEVATIONS

scale: 1:20

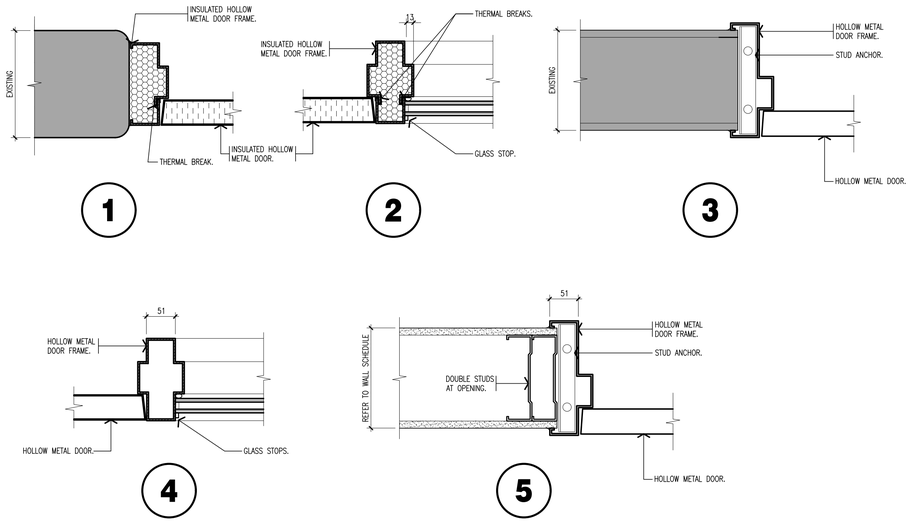

3 JAMB DETAILS

scale: 1:5

NOT THE GRANTING OF A PERMIT NOR REVIEWING OF SPECS & DRAWINGS NOR INSPECTIONS MADE DURING INSTALLATION BY THE OFFICIAL HAVING JURISDICTION SHALL RELIEVE THE OWNER FROM REQUIREMENTS OF THE ONTARIO BUILDING CODE AND ANY OTHER REFERENCED REQUIREMENTS.

DOOR & HARDWARE SCHEDULE

| DOOR LOCATION | | | DOOR | | | | | | | | | | | | | | | | | FRAME | | | | | | | | | | HARDWARE | | | | | | | | | | | | | | | | |

PLUMBING FIXTURE SCHEDULE

REF.	FIXTURE NAME	DHW	DCW	DRAIN	VENT
LV-1	COUNTER MOUNTED STAINLESS STEEL SINK – SINGLE COMPARTMENT	12	12	40	40

SCHEDULE OF GRILLES & DIFFUSERS

TYPE	SERVICE	MANUFACTURER	MODEL	VOLUME CONTROL	FINISH	REMARKS
A	EXHAUST	E.H. PRICE	530	YES	B12	
B	SUPPLY	E.H. PRICE	SCDA	YES	B12	

SCHEDULE OF CONVECTORS

TAG	HEATING OUTPUT		HEATING AGENT		TUBE DIAM (MM)	FIN SIZE (MMxMM)	FIN SPACING (FINS/M)	ROW	MOUNTING HEIGHT MM [IN]		REMARKS
	(W/M)	(BTU/FT)	SUPPLY °C [°F]	RETURN °C [°F]					AFF	ENCLOSURE	
WF-A	1130	1170	82 [180]	71 [160]	32	102x102	164	1	TBD	610 [24]	SLOPED TOP & BOTTOM OUTLETS, HEIGHT TO BE COORDINATED WITH MILLWORK

DESIGN BASED ON ENGINEERED AIR WALL-FIN WF-1B

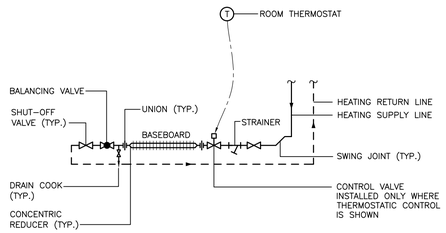

TYPICAL PERIMETER RADIATION CONNECTION
N.T.S.

MECHANICAL SYMBOLS

SAN	EXPOSED SANITARY DRAIN
SAN	BURIED SANITARY DRAIN
STM	EXPOSED STORM DRAIN
STM	BURIED STORM DRAIN
	SANITARY VENT
	DOMESTIC COLD WATER SUPPLY
	DOMESTIC HOT WATER SUPPLY
	DOMESTIC HOT WATER RECIRC
	PLUMBING TRAP
	PIPE TURNING DOWN
	PIPE TURNING UP
VTR	VENT THROUGH ROOF
FD	FLOOR DRAIN
CO	CLEANOUT IN FLOOR
CO	CLEANOUT IN CEILING SPACE
WC-1	DENOTES PLUMBING FIXTURE AS PER SPECIFICATION
	DENOTES: EQUIPMENT OR PIPING TO BE REMOVED
	AUTOMATIC CONTROL VALVE – TWO WAY
	MIXING OR DIVERTER VALVE (3-WAY)
	VALVE
HWS	HEATING WATER SUPPLY
T	ROOM THERMOSTAT
	SEMI-RECESSED SPRINKLER
	EXHAUST OR RECIRC. GRILLE
	SUPPLY AIR CEILING DIFFUSER
	FLEXIBLE DUCT
CTE	DENOTES: CONNECT TO EXISTING
CUT	DENOTES: CUT POINT OF EXISTING SERVICE

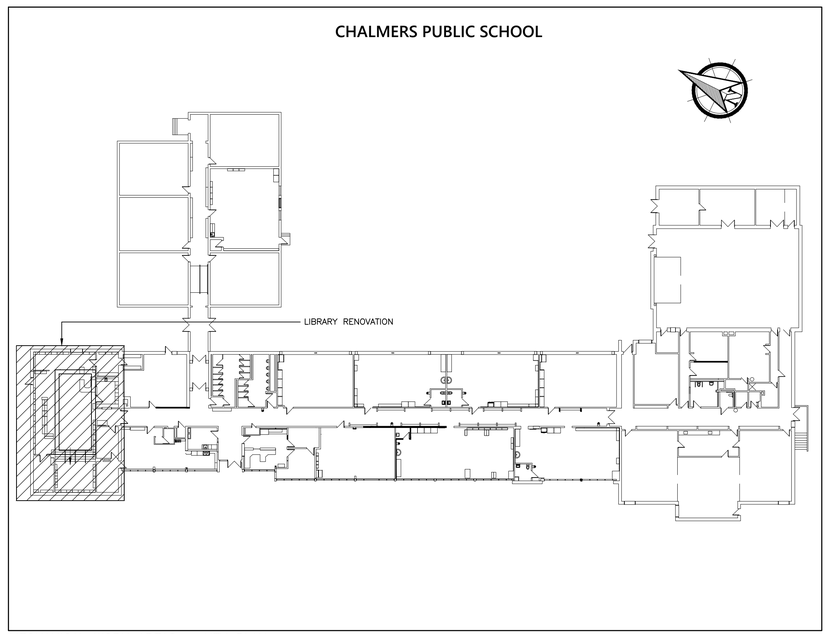

MECHANICAL WORK AREAS – KEY PLAN
SCALE: N.T.S.

NOT THE GRANTING OF A PERMIT NOR REVIEWING OF SPECS & DRAWINGS NOR INSPECTIONS MADE DURING INSTALLATION BY THE OFFICIAL HAVING JURISDICTION SHALL RELIEVE THE OWNER FROM REQUIREMENTS OF THE ONTARIO BUILDING CODE AND ANY OTHER REFERENCED REQUIREMENTS.

Waterloo Region District School Board

NOTE:
This drawing and all associated documentation are the confidential property of BJC architects + assocs. inc. and must be returned upon request. Any duplication, reuse, revision and/or distribution in part or whole without the prior written authorization of BJC architects + assocs. inc. is strictly prohibited. Each contractor will check and verify all dimensions and report all errors and omissions to the design professional whose seal is affixed to this drawing. Do not scale this drawing.
The information and material herein reflect the best judgement of BJC architects + assocs. inc., in light of the information available to them at the time of preparation of these documents. Any use which a third party makes of these documents, or any reliance on or decisions to be made based on them, is the sole responsibility of such third party. BJC architects + assocs. inc. accepts no responsibility for damages, if any, suffered by any third party as a result of decisions made or actions based on these documents © BJC architects + assocs. inc. 2026.

No.	REVISIONS	date
01	ISSUED FOR TENDER	2026.03.24

PROJECT NORTH
TRUE NORTH
scale AS NOTED

Consultant:
SAB ENGINEERING Inc.
188 EDWARD AVE., UNIT 25, RICHMOND HILL, ONT., L4C 9Y6
TEL. (905) 787 8885 FAX (905) 787 8771

drawn JM
last worked on 2026.03.06 by JM
checked O.S.
print date 24/03/26

BJC architects inc.
R.R.#2 8016 HIGHWAY#7, GUELPH, ONTARIO, CANADA N1H 6H8
TEL. (519) 822.7390 FAX (519) 822.5881
www.bjcarchitects.com

client
WATERLOO REGION DISTRICT SCHOOL BOARD
51 ARDELT AVENUE
KITCHENER ONTARIO

project
CHALMERS PUBLIC SCHOOL RENOVATION
35 CHALMERS STREET SOUTH
CAMBRIDGE ONTARIO

drawing title
KEY PLAN, LEGEND, SCHEDULES, & DETAILS

reference

project no. 25-104
client reference number

sheet no. M-01 01

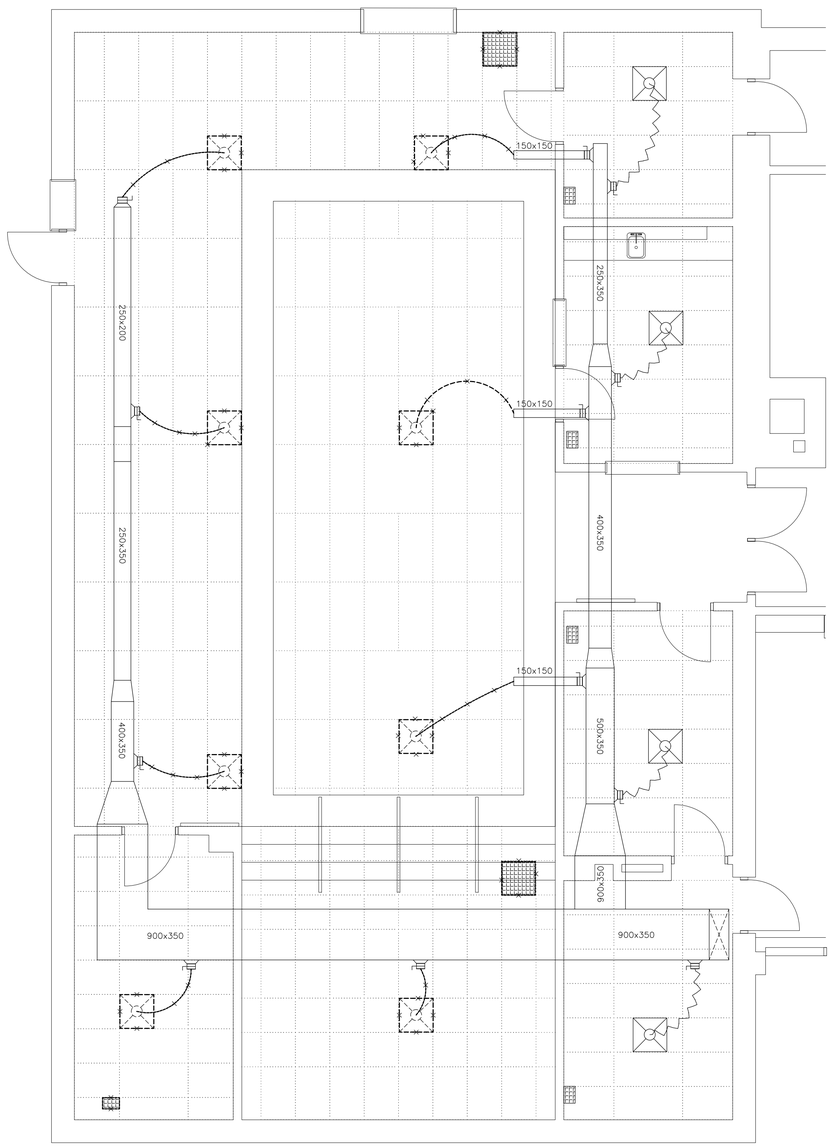

GROUND FLOOR LIBRARY – HVAC LAYOUT – EXISTING AND DEMO WORK
SCALE: 1:50

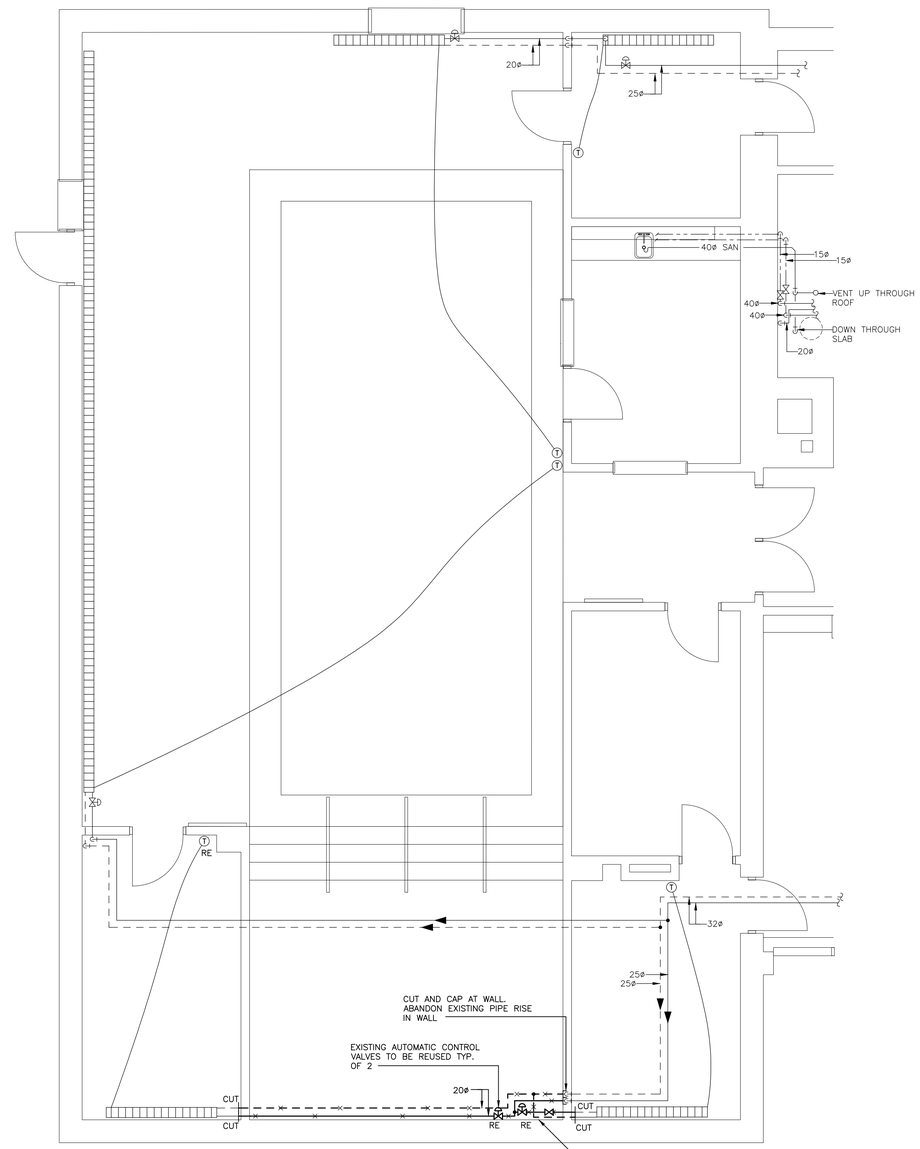

GROUND FLOOR LIBRARY – ABOVE GROUND PIPING LAYOUT – EXISTING AND DEMO WORK
SCALE: 1:50

DEMOLITION NOTES:

THESE NOTES SHALL BE READ IN CONJUNCTION WITH, AND SHALL FORM AN INTEGRAL PART OF THE SPECIFICATIONS.

PRIOR TO COMMENCING THE DEMOLITION WORK, EXAMINE CAREFULLY THE ELEMENTS OF THE EXISTING PLUMBING TO BE REMOVED. FOR REASONS OF CLARITY, THE DRAWINGS DO NOT SHOW ALL BUILDING SERVICES LOCATED IN THIS AREA OR ALL STRUCTURAL ELEMENTS. ALL BUILDING SERVICES AND OTHER UTILITIES NOT AFFECTED BY THIS WORK SHALL REMAIN OPERATIONAL. ANY DAMAGE TO BUILDING SERVICES AND UTILITIES NOT AFFECTED BY THE WORK SHALL BE PROMPTLY REPAIRED BY THE CONTRACTOR, AT NO COST TO THE BOARD.

THE SIZES AND LOCATION OF PIPING, EQUIPMENT AND OTHER UTILITIES INDICATED ON THE DRAWINGS WERE BASED ON EXISTING DRAWINGS. MAKE ANY CHANGES REQUIRED TO SUIT THE ACTUAL SITE CONDITIONS AT NO COST TO THE BOARD.

THE DEMOLITION WORK SHALL INCLUDE THE TEMPORARY OR PERMANENT RELOCATION OF ANY EXISTING BUILDING SERVICES OR ARCHITECTURAL ELEMENTS NOT SPECIFICALLY MENTIONED HEREIN BUT OBVIOUSLY NECESSARY FOR THE INSTALLATION OF THE NEW EQUIPMENT (SUCH AS, DRAINS, SANITARY VENTS, LIGHTING FIXTURES, CONDUITS, JUNCTION BOXES AND SIMILAR). AT THE CONCLUSION OF THE WORK, ALL BUILDING SERVICES AND ARCHITECTURAL ELEMENTS TEMPORARILY REMOVED SHALL BE REINSTATED AND MADE GOOD TO THEIR ORIGINAL CONDITION.

COORDINATE THE DEMOLITION WORK WITH THE ARCHITECTURAL DRAWINGS AND SPECIFICATIONS.

THE DRAWINGS DO NOT SHOW ALL STRUCTURAL ELEMENTS AND BUILDING SERVICES. INSTALL THE NEW DUCTING SUCH AS TO AVOID INTERFERENCES WITH EXISTING BUILDING SERVICES AND OTHER UTILITIES LOCATED IN THE CEILING SPACE. RELOCATE EXISTING SERVICES IF SO REQUIRED TO ACCOMMODATE THE NEW PIPING AND DUCTWORK, AT NO ADDITIONAL COST TO THE BOARD.

CONTRACTOR TO INCLUDE FOR REMOVAL EXISTING T–BAR CEILING IN THE WORK AREAS AS PER THE ARCHITECTURAL DRAWINGS. INCLUDE FOR REMOVAL OF CEILING TILES, LIGHTING, DIFFUSERS, AND ANY OTHER SERVICES SUCH AS FIRE ALARM DEVICES THAT NEED TO BE REMOVED. ANY REMOVED AND RE–INSTALLED FIRE ALARM DEVICES SHALL BE RE–VERIFIED.

REMOVE EXISTING HEATING PIPING RUNNING UNDER THE EXISTING ELEVATED STAGE AREA APPROXIMATELY AS SHOWN. CAP AND ABANDON EXISTING PIPING IN WALLS. ALL EXISTING CONTROL VALVES SHALL BE RE–USED FOR NEW INSTALLATION.

DISPOSE OF ALL REMOVED MATERIALS OFF–SITE AND LEAVE THE SITE CLEAN FOR SUBSEQUENT WORK.

COORDINATE PHASING OF THE DEMOLITION WORK WITH THE ARCHITECT DRAWINGS AND SPECIFICATIONS.

NOT THE GRANTING OF A PERMIT NOR REVIEWING OF SPECS & DRAWINGS NOR INSPECTIONS MADE DURING INSTALLATION BY THE OFFICIAL HAVING JURISDICTION SHALL RELIEVE THE OWNER FROM REQUIREMENTS OF THE ONTARIO BUILDING CODE AND ANY OTHER REFERENCED REQUIREMENTS.

Waterloo Region District School Board

NOTE:
This drawing and all associated documentation are the confidential property of BJC architects + assocs. inc. and must be returned upon request. Any duplication, reuse, revision and/or distribution in part or whole without the prior written authorization of BJC architects + assocs. inc. is strictly prohibited. Each contractor will check and verify all dimensions and report all errors and omissions to the design professional whose seal is affixed to this drawing. Do not scale this drawing.
The information and material herein reflect the best judgement of BJC architects + assocs. inc., in light of the information available to them at the time of preparation of these documents. Any use which a third party makes of these documents, or any reliance on or decisions to be made based on them, is the sole responsibility of such third party. BJC architects + assocs. inc. accepts no responsibility for damages, if any, suffered by any third party as a result of decisions made or actions based on these documents © BJC architects + assocs. inc. 2026.

No.	REVISIONS	date
01	ISSUED FOR TENDER	2026.03.24

PROJECT NORTH
TRUE NORTH
scale AS NOTED

Consultant:
SAB ENGINEERING Inc.
588 EDWARD AVE., UNIT 25, RICHMOND HILL, ONT., L4C 9Y6
TEL. (905) 787 8885 FAX (905) 787 8771

drawn JM
last worked on 2026.03.06 by JM
checked O.S.
print date 24/03/26

BJC architects inc.
R.R.#2 8016 HIGHWAY #7, GUELPH, ONTARIO, CANADA N1H 6H8
TEL. (519) 822.7390 FAX (519) 822.5881
www.bjcarchitects.com

client
WATERLOO REGION DISTRICT SCHOOL BOARD
51 ARDELT AVENUE
KITCHENER ONTARIO

project
CHALMERS PUBLIC SCHOOL RENOVATION
35 CHALMERS STREET SOUTH
CAMBRIDGE ONTARIO

drawing title
HVAC & PIPING LAYOUT – EX. & DEMOLITION

reference

project no. 25–104
client reference number

sheet no. M- 02 01

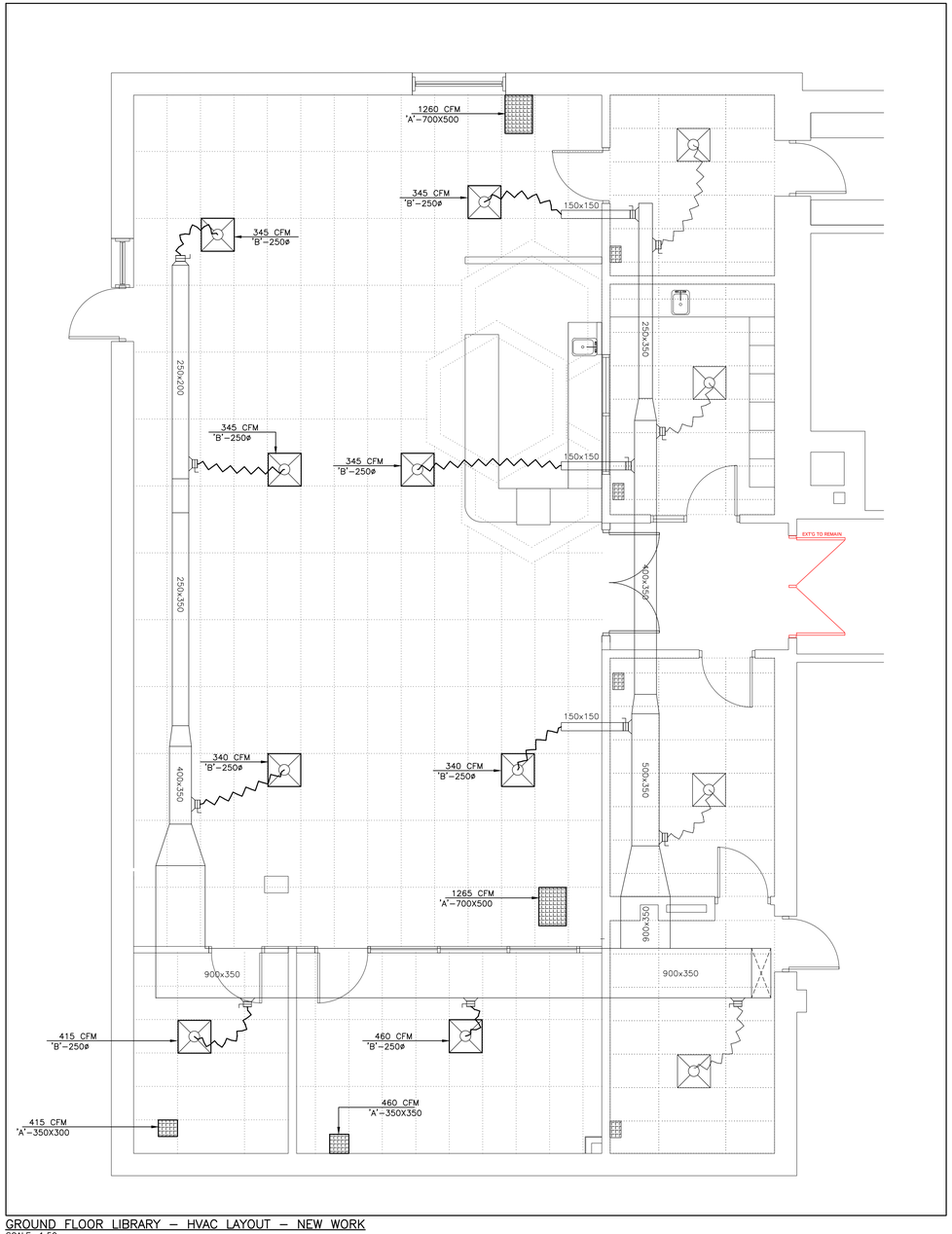

GROUND FLOOR LIBRARY – HVAC LAYOUT – NEW WORK
SCALE: 1:50

FOR NEW WORK NOTES REFER TO DRAWING M-4

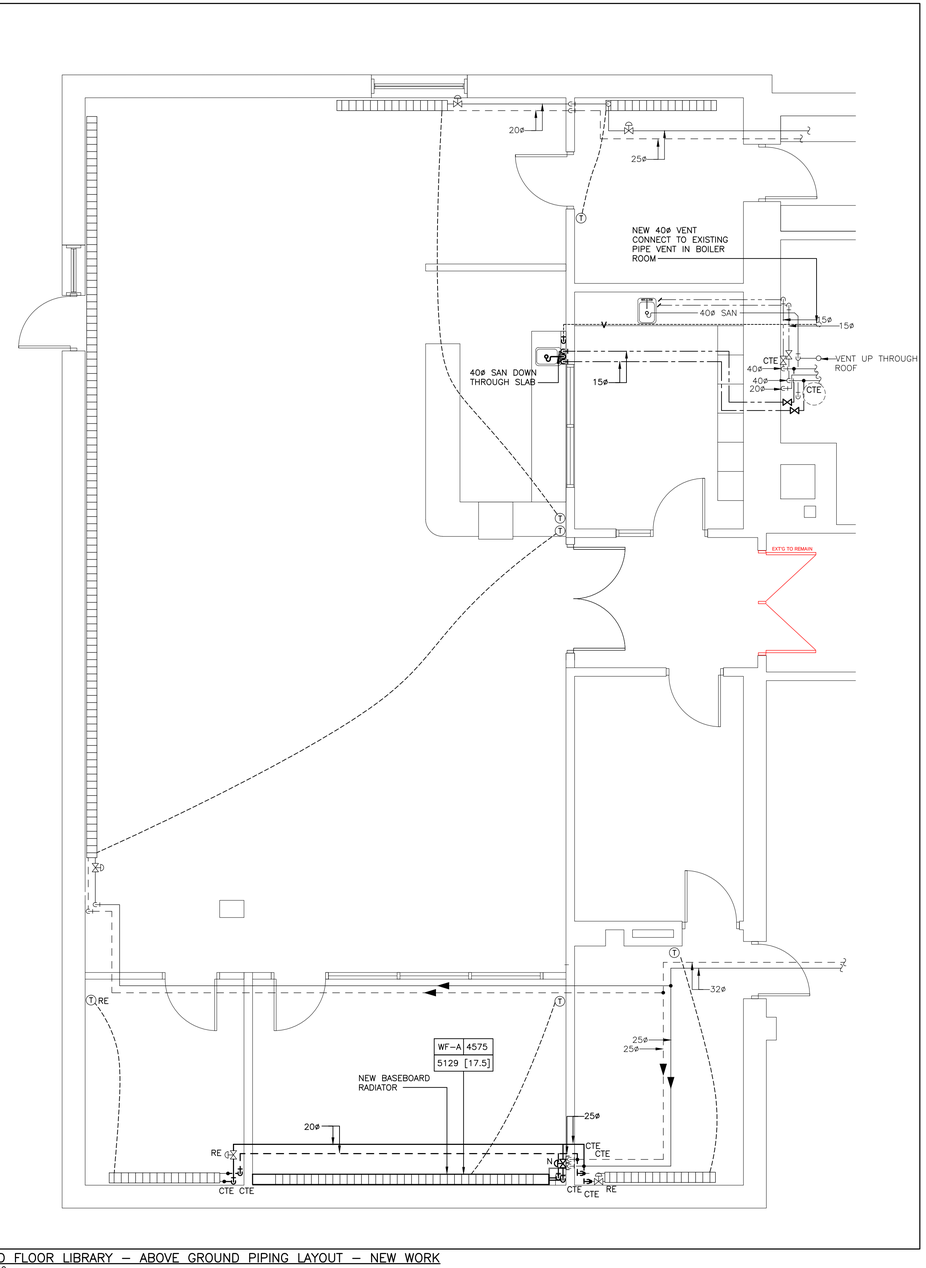

GROUND FLOOR LIBRARY – ABOVE GROUND PIPING LAYOUT – NEW WORK
SCALE: 1:50

AS PER 6.7.1.3.(1), THE EXPOSED SURFACE TEMPERATURE OF A STEAM OR HOT WATER RADIATOR SHALL NOT EXCEED 70°C UNLESS PRECAUTIONS ARE TAKEN TO PREVENT HUMAN CONTACT.

NOT THE GRANTING OF A PERMIT NOR REVIEWING OF SPECS & DRAWINGS NOR INSPECTIONS MADE DURING INSTALLATION BY THE OFFICIAL HAVING JURISDICTION SHALL RELIEVE THE OWNER FROM REQUIREMENTS OF THE ONTARIO BUILDING CODE AND ANY OTHER REFERENCED REQUIREMENTS.

Waterloo Region District School Board

NOTE:
This drawing and all associated documentation are the confidential property of BJC architects + assocs. inc. and must be returned upon request. Any duplication, reuse, revision and/or distribution in part or whole without the prior written authorization of BJC architects + assocs. inc. is strictly prohibited. Each contractor will check and verify all dimensions and report all errors and omissions to the design professional whose seal is affixed to this drawing. Do not scale this drawing.
The information and material herein reflect the best judgement of BJC architects + assocs. inc., in light of the information available to them at the time of preparation of these documents. Any use which a third party makes of these documents, or any reliance on or decisions to be made based on them, is the sole responsibility of such third party. BJC architects + assocs. inc. accepts no responsibility for damages, if any, suffered by any third party as a result of decisions made or actions based on these documents © BJC architects + assocs. inc. 2026.

No.	REVISIONS	date
01	ISSUED FOR TENDER	2026.03.24

PROJECT NORTH
TRUE NORTH
scale AS NOTED

Consultant:
SAB ENGINEERING Inc.
588 EDWARD AVE., UNIT 25, RICHMOND HILL, ONT., L4C 9Y6
TEL. (905) 787 8885 FAX (905) 787 8771

drawn JM
last worked on 2026.03.06 by JM
checked O.S.
print date 24/03/26

BJC architects inc.
R.R.#2 8016 HIGHWAY#7, GUELPH, ONTARIO, CANADA N1H 6H8
TEL. (519) 822.7390 FAX (519) 822.5881
www.bjcarchitects.com

client
WATERLOO REGION DISTRICT SCHOOL BOARD
51 ARDELT AVENUE
KITCHENER ONTARIO

project
CHALMERS PUBLIC SCHOOL RENOVATION
35 CHALMERS STREET SOUTH
CAMBRIDGE ONTARIO

drawing title
HVAC & PIPING LAYOUT – NEW WORK

reference

project no. 25-104
client reference number

sheet no. M-03 01

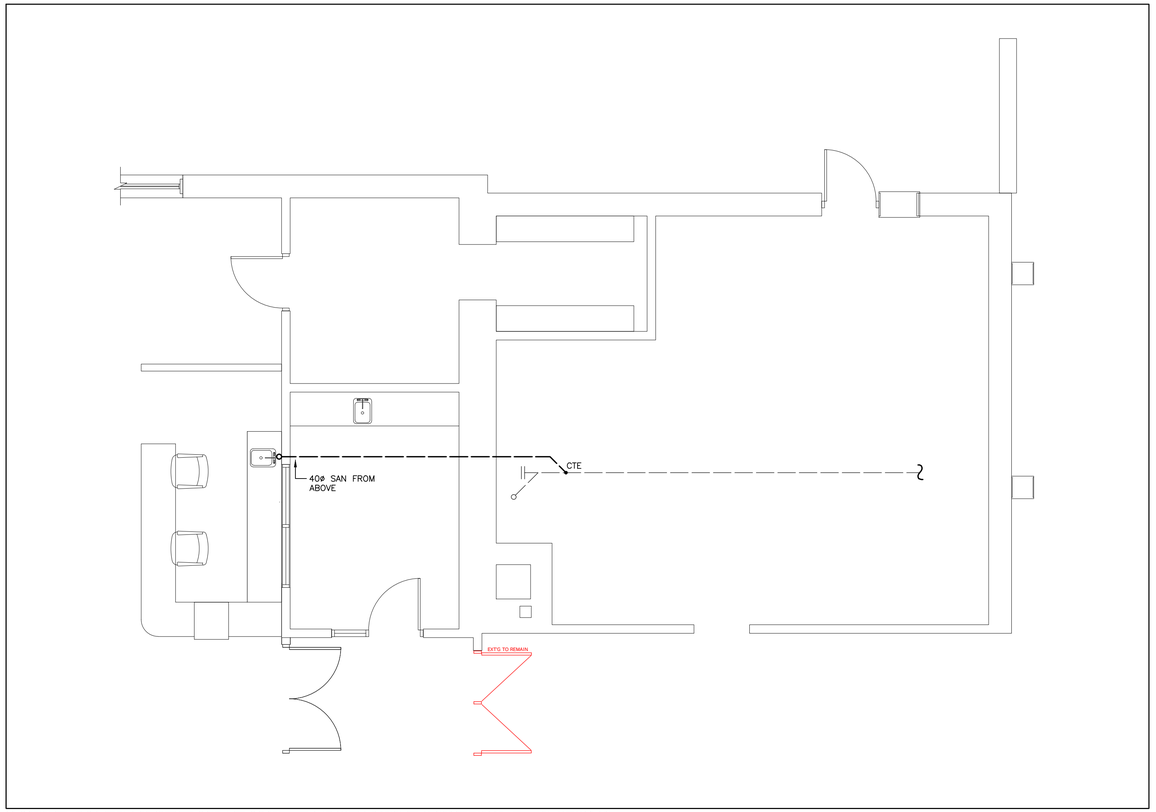

GROUND FLOOR LIBRARY & BOILER ROOM – BELOW GROUND PIPING LAYOUT – NEW WORK
SCALE: 1:50

GENERAL NEW WORK NOTES:

THE DRAWINGS DO NOT SHOW ALL STRUCTURAL ELEMENTS AND BUILDING SERVICES LOCATED ON THE ROOF OR IN THE CEILING BELOW..

THE SIZES AND LOCATION OF PIPING, EQUIPMENT AND DUCTWORK SHOWN ON THE DRAWINGS WERE SITE MEASURED. MAKE ANY CHANGES REQUIRED TO SUIT THE ACTUAL SITE CONDITIONS AT NO COST TO THE OWNER.

ALL TEMPORARY INTERRUPTION OF SERVICES SHALL BE COORDINATED WITH THE OWNER.

PROVIDE NEW SANITARY AND VENT PIPING FOR NEW COUNTER MOUNTED SINK. THE CONTRACTOR IS TO INCLUDE FOR ALL FLOOR AND SLAB REMOVAL AND REPAIR AS REQUIRED TO COMPLETE THE INSTALLATION OF NEW PIPING (SANITARY, DCW, DHW, VENTING). EXACT ROUTING OF SANITARY TO BE CONFIRMED ON SITE. CONTRACTOR SHALL BE RESPONSIBLE FOR SCANNING AND/OR CAMERA INSPECTION TO VERIFY EXACT LOCATION AND INVERT OF EXISTING SANITARY LINE.

CONNECT VENT TO EXISTING VENT LINE IN BOILER ROOM.

PROVIDE ALL TRAPS, TRAP PRIMERS, AND VENTS AS PER OBC REQUIREMENTS.

COORDINATE THE LAYOUT OF ALL NEW PIPING AND DUCTWORK WITH THE EXISTING SERVICES AND EQUIPMENT.

CONNECT NEW DOMESTIC COLD AND HOT WATER FOR NEW SINK TO EXISTING LINES IN THE BOILER ROOM APPROXIMATELY AS SHOWN, VERIFY EXACT LOCATION ON SITE. PROVIDE NEW SHUT–OFF VALVES.

PROVIDE NEW SUPPLY FLEXIBLE DUCTWORK AND DIFFUSERS IN THE LIBRARY APPROXIMATELY AS SHOWN. PROVIDE NEW RETURN GRILLES AS SHOWN. CONTRACTOR TO VERIFY EXACT DUCT ROUTING ON SITE AND MAKE ADJUSTMENTS AS NECESSARY. ALLOW FOR ADDITIONAL OFFSETS, TRANSITIONS, AND ELBOWS AS REQUIRED TO COMPLETE THE INSTALLATION.

COORDINATE DUCTWORK INSTALLATION WITH EXISTING SERVICES IN THE CEILING SPACE SUCH AS STRUCTURAL AND ELECTRICAL ELEMENTS.

PERFORM AIR BALANCING AND MAKE ALL NECESSARY ADJUSTMENTS SO AS TO ENSURE THAT THE UNITS OPERATES AS PER SPECIFIED PARAMETERS. ALL COMPONENTS OF THE NEW UNIT AIR SYSTEM SHALL BE ADJUSTED AND STARTED–UP BY THE MANUFACTURER; PROVIDE START–UP REPORT UPON PROJECT COMPLETION.

PROVIDE ADEQUATE SUPPORT FOR ALL NEW DUCTWORK.

ENSURE THAT ALL ISOLATION VALVES FOR NEW PLUMBING FIXTURES ARE ACCESSIBLE FOR MAINTENANCE.

PROVIDE NEW RADIATOR AT HIGH LEVEL TO SERVE NEW MEETING ROOM. PROVIDE NEW PIPING AND VALVES AS PER DETAIL ON M–1.

PROVIDE NEW HWS/HWR PIPING ABOVE CEILING TO SERVE EXISTING AND NEW RADIATORS IN THE MEETING ROOM, SEMINAR ROOM, AND EXISTING WORK ROOM. RE–CONNECT TO EXISTING PIPING IN CEILING SPACE. RE–INSTALL EXISTING CONTROL VALVES FOR SEMINAR ROOM AND WORK ROOM. PROVIDE NEW CONTROL VALVE FOR NEW RADIATOR IN MEETING ROOM. ALL PIPING TO DROP TO RADIATORS IN NEW DRYWALL SHAFTS, REFER TO ARCHITECTURAL DRAWINGS. CONTRACTOR TO VERIFY EXACT ROUTING OF NEW PIPING ON SITE.

PROVIDE NEW INSULATION FOR ALL NEW DUCTWORK AND PIPING AS PER SPECIFICATIONS.

NOT THE GRANTING OF A PERMIT NOR REVIEWING OF SPECS & DRAWINGS NOR INSPECTIONS MADE DURING INSTALLATION BY THE OFFICIAL HAVING JURISDICTION SHALL RELIEVE THE OWNER FROM REQUIREMENTS OF THE ONTARIO BUILDING CODE AND ANY OTHER REFERENCED REQUIREMENTS.

Waterloo Region District School Board

NOTE:
This drawing and all associated documentation are the confidential property of BJC architects + assocs. inc. and must be returned upon request. Any duplication, reuse, revision and/or distribution in part or whole without the prior written authorization of BJC architects + assocs. inc. is strictly prohibited. Each contractor will check and verify all dimensions and report all errors and omissions to the design professional whose seal is affixed to this drawing. Do not scale this drawing.
The information and material herein reflect the best judgement of BJC architects + assocs. inc., in light of the information available to them at the time of preparation of these documents. Any use which a third party makes of these documents, or any reliance on or decisions to be made based on them, is the sole responsibility of such third party. BJC architects + assocs. inc. accepts no responsibility for damages, if any, suffered by any third party as a result of decisions made or actions based on these documents © BJC architects + assocs. inc. 2026.

No.	REVISIONS	date
01	ISSUED FOR TENDER	2026.03.24

PROJECT NORTH
TRUE NORTH
scale AS NOTED

Consultant:
SAB ENGINEERING Inc.
588 EDWARD AVE., UNIT 25, RICHMOND HILL, ONT., L4C 9Y6
TEL. (905) 787 8865 FAX (905) 787 8771

drawn JM
last worked on 2026.03.06 by JM
checked O.S.
print date 24/03/26

BJC architects inc.
R.R.#2 8016 HIGHWAY#7, GUELPH, ONTARIO, CANADA N1H 6H8
TEL. (519) 822.7390 FAX (519) 822.5881
www.bjcarchitects.com

client
WATERLOO REGION DISTRICT SCHOOL BOARD
51 ARDELT AVENUE
KITCHENER ONTARIO

project
CHALMERS PUBLIC SCHOOL RENOVATION
35 CHALMERS STREET SOUTH
CAMBRIDGE ONTARIO

drawing title
U/G PIPING LAYOUT – NEW WORK

reference

project no. 25–104
client reference number

sheet no. M- 04 01

NEW LIGHTING SCHEDULE

SYMBOL	PRODUCT DESCRIPTION	LAMP				MOUNTING				NOTES
		VOLTAGE	QUANTITY	WATTAGE	TYPE	RECESSED	SURFACE	SUSPENDED	WALL	
"A"	24X48 LED RECESSED PANEL LIGHT FIXTURE LED MODEL#COLUMBIA– CBT24	120V	23	–	LED	X	–	–	–	
"B"	LED RECESSED POT LIGHT MODEL#LFR–4RD	120V	8	–	LED	X	–	–	–	
"C"	24X2.4 LED SUSPENDED PENDANT RAIL 2 RM2D	120V	12	–	LED	–	–	–	–	

SYMBOLS – ELECTRICAL

	DIRECT POWER OUTLET FOR USE AS NOTED INCLUDING FINAL CONNECTION.
	ELECTRICAL PANEL
	15A, 120V U–GROUND DUPLEX RECEPTACLE.
	15A, 120V U–GROUND QUADPLEX RECEPTACLE.
	15A, 120V U–GROUND DUPLEX RECEPTACLE MOUNTED AT HIGH LEVEL OR ABOVE COUNTER.
	40A 240V, 1P STOVE RECEPTACLE
	EMERGENCY LIGHTING REMOTE HEAD AS SHOWN. REFER TO SCHEDULE ON DRAWINGS AND SPECIFICATIONS FOR DETAILS
	RATE OF RISE HEAT DETECTOR
CP	ROOM CONTROL PANEL, INSTALLED BY ELECTRICAL DIVISION.
	ELECTRICAL PANEL, SURFACE OR FLUSH RESPECTIVELY.
	DATA OUTLET C/W 3/4"C WITH 90° BEND AT TOP AND PVC END BUSHING TO ACCESSIBLE CEILING SPACE.
	LIGHTING FIXTURE
WAP	WIRELESS ACCESS POINT WITH DATA OUTLET C/W 3/4"C WITH 90° BEND AT TOP AND PVC END BUSHING TO CABLE TRAY IN CORRIDOR CEILING SPACE. PROVIDE CABLING AS PER SPECIFICATIONS. 'XD' – WHERE 'X' DENOTES NUMBER OF CABLES & JACKS.
	SINGLE POLE TOGGLE SWITCHES WITH ONE, TWO OR THREE GANG RESPECTIVELY.
CP	ROOM CONTROL PANEL WITH DEVICES AS SHOWN. SUPPLIED & INSTALLED BY ELECTRICAL DIVISION. REFER TO SPECIFICATIONS FOR DETAILS.
S	PUBLIC ADDRESS SYSTEM SPEAKER
AV	AV OUTLET C/W HDMI PORT FOR PROJECTOR C/W 41mm CONDUIT
T	ROOM THERMOSTAT
EX	DENOTES EXISTING TO REMAIN
R	DENOTES EXISTING TO TO BE REMOVED ENTIRELY
N	DENOTES NEW
ER	EXISTING ELECTRICAL EQUIPMENT/DEVICE TO BE RELOCATED.
RE	EXISTING ELECTRICAL EQUIPMENT/DEVICE IN RELOCATED POSITION.

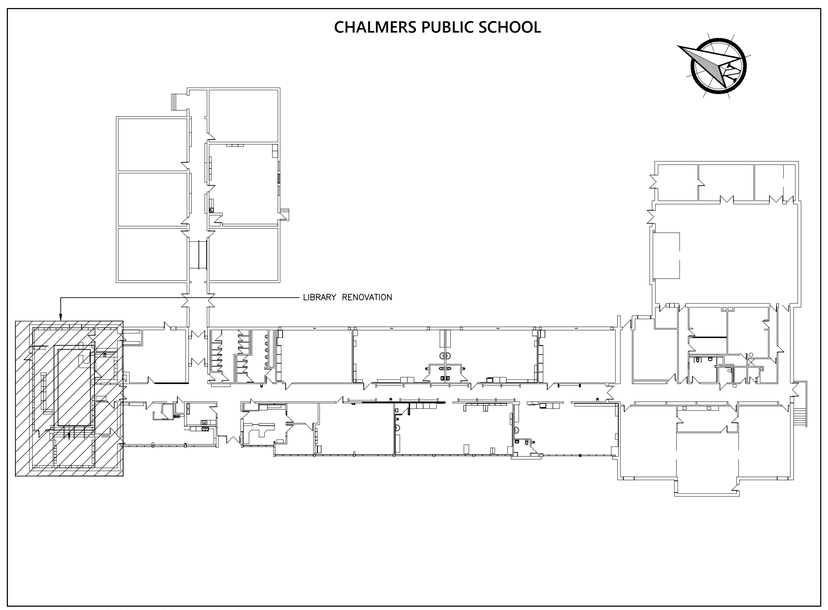

MECHANICAL WORK AREAS – KEY PLAN
SCALE: N.T.S.

NOT THE GRANTING OF A PERMIT NOR REVIEWING OF SPECS & DRAWINGS NOR INSPECTIONS MADE DURING INSTALLATION BY THE OFFICIAL HAVING JURISDICTION SHALL RELIEVE THE OWNER FROM REQUIREMENTS OF THE ONTARIO BUILDING CODE AND ANY OTHER REFERENCED REQUIREMENTS.

Waterloo Region District School Board

NOTE:
This drawing and all associated documentation are the confidential property of BJC architects + assocs. inc. and must be returned upon request. Any duplication, reuse, revision and/or distribution in part or whole without the prior written authorization of BJC architects + assocs. inc. is strictly prohibited. Each contractor will check and verify all dimensions and report all errors and omissions to the design professional whose seal is affixed to this drawing. Do not scale this drawing.
The information and material herein reflect the best judgement of BJC architects + assocs. inc., in light of the information available to them at the time of preparation of these documents. Any use which a third party makes of these documents, or any reliance on or decisions to be made based on them, is the sole responsibility of such third party. BJC architects + assocs. inc. accepts no responsibility for damages, if any, suffered by any third party as a result of decisions made or actions based on these documents © BJC architects + assocs. inc. 2026.

No.	REVISIONS	date
01	ISSUED FOR TENDER	2026.03.24

PROJECT NORTH
TRUE NORTH
scale AS NOTED

Consultant:
SAB ENGINEERING Inc.
588 EDWARD AVE., UNIT 25, RICHMOND HILL, ONT., L4C 9Y6
TEL. (905) 787 8885 FAX (905) 787 8771

drawn JM
last worked on 2026.03.06 by JM
checked O.S.
print date 24/03/26

BJC architects inc.
R.R.#2 8016 HIGHWAY#7, GUELPH, ONTARIO, CANADA N1H 6H8
TEL. (519) 822.7390 FAX (519) 822.5881
www.bjcarchitects.com

client
WATERLOO REGION DISTRICT SCHOOL BOARD
51 ARDELT AVENUE
KITCHENER ONTARIO

project
CHALMERS PUBLIC SCHOOL RENOVATION
35 CHALMERS STREET SOUTH
CAMBRIDGE ONTARIO

drawing title
LEGEND, KEY PLAN, & SCHEDULES

reference

project no. 25–104
client reference number

sheet no. E-01 01

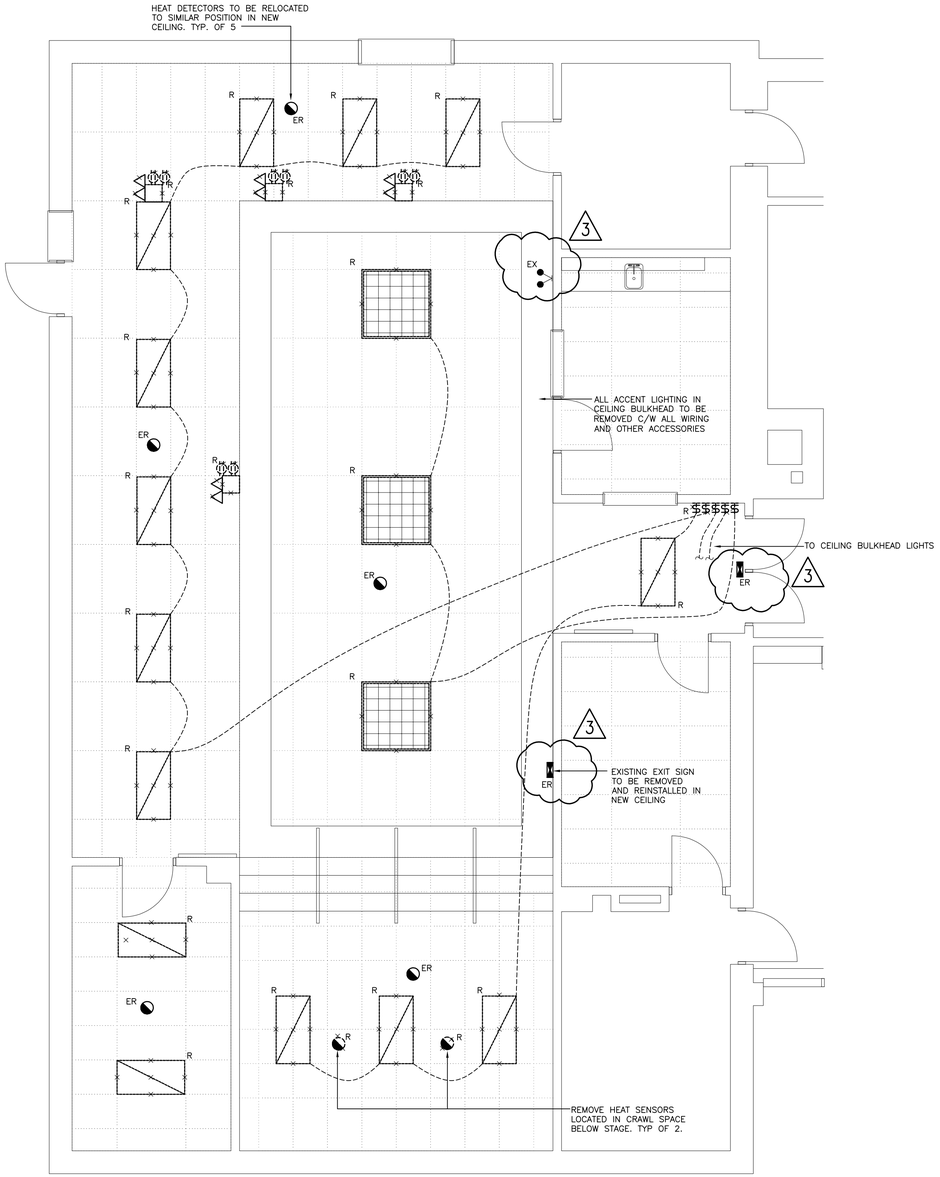

GROUND FLOOR LIBRARY – LIGHTING & FIRE ALARM LAYOUT – EXISTING AND DEMO WORK
SCALE: 1:50

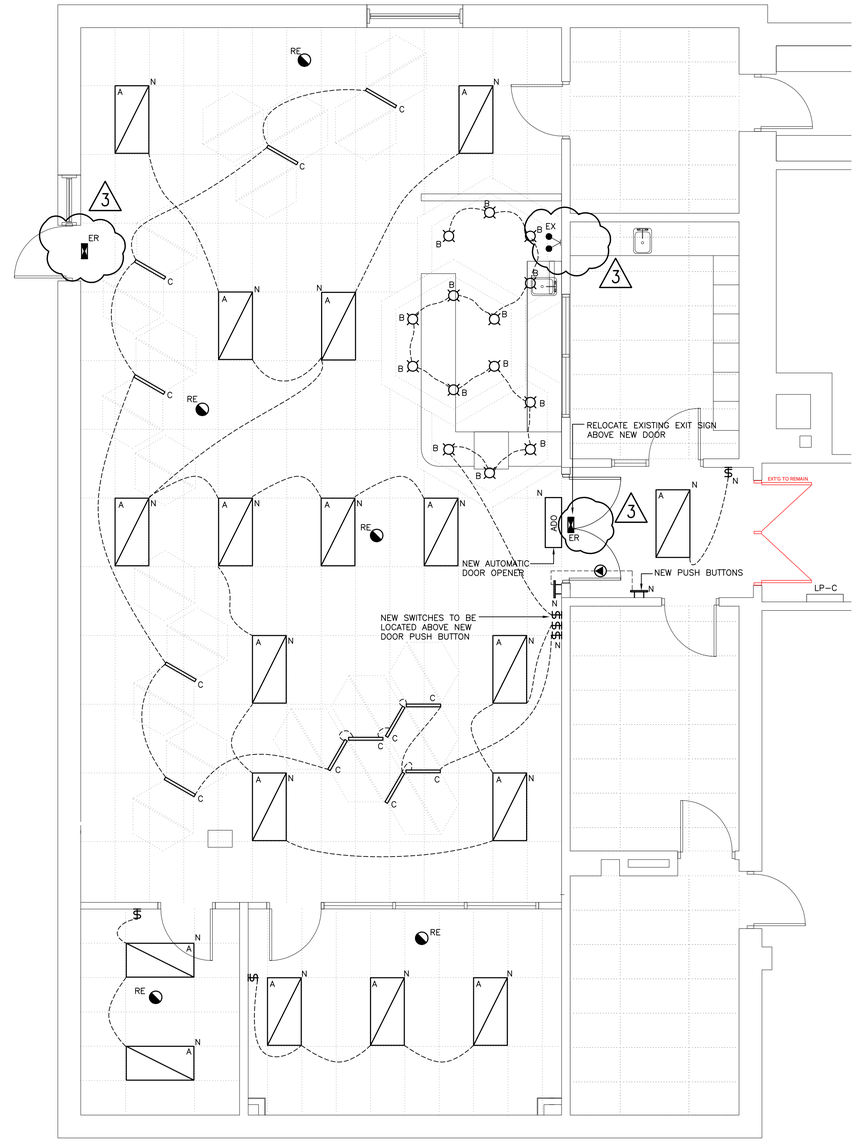

GROUND FLOOR LIBRARY – LIGHTING & FIRE ALARM LAYOUT – NEW WORK
SCALE: 1:50

NEW WORK NOTES:

PROVIDE NEW LIGHT FIXTURES AS SHOWN OF TYPE NOTED. CONNECT LIGHTING TO THE EXISTING LIGHTING POWER CIRCUITS SERVING THE AREA. REMOVE EXISTING SWITCHES BY LIBRARY ENTRANCE AND PROVIDE NEW SWITCHES AT NEW LOCATION ABOVE NEW PUSH–BOTTOM, APPROXIMATELY AS SHOWN. EXTEND EXISTING POWER WIRING TO NEW SWITCH LOCATION. PROVIDE NEW WIRING FROM NEW SWITCH TO NEW LIGHTS. INCLUDE FOR EXTENDING OF ALL EXISTING LIGHTING CIRCUITS AS REQUIRED TO SUIT THE NEW LIGHTING LAYOUT.

INCLUDE FOR THE SUPPLY & INSTALLATION OF NEW J–HOOKS TO SUPPORT EXISTING, UN–SUPPORTED LOW–VOLTAGE CABLING. MINIMUM SPAN OF J–HOOKS SHALL BE 5FT, INCREASED AS NECESSARY TO SUIT THE NUMBER OF CABLES. AFTER REMOVAL OF CEILINGS, CAREFULLY SUPPORT ALL EXISTING CABLING NOT PROPERLY SUPPORTED USING THE J–HOOK CABLE MANAGEMENT SYSTEM.

TRACE AND VERIFY ALL EXISTING POWER AND SYSTEM SOURCES SERVING THE RENOVATED AREAS INCLUDING BRANCH CIRCUITS.

PROVIDE LABELS (CLEAR TAPE WITH BLACK LETTERS FOR SIZE 14) ON ALL NEW AND EXISTING TO REMAIN RECEPTACLES, SWITCHES AND JUNCTION BOXES COVERPLATES.

ALL DEVICES/EQUIPMENT/POWER CONNECTIONS SHOWN ARE NEW UNLESS OTHERWISE STATED.

PROVIDE 120V POWER CONNECTIONS (C/W WIRING AND RACEWAYS), BACKBOXES, LOW VOLTAGE WIRING AND CONDUIT REQUIRED FOR THE DOOR OPERATOR SYSTEM (C/W TWO PUSH BUTTONS, PUSH–TO–LOCK BUTTON, ELECTRIC STRIKE AND AUTO OPERATOR) FOR A FULLY OPERATIONAL SYSTEM. ELECTRIC STRIKE, POWER SUPPLY, AUTO OPERATOR, ACTUATORS, PUSH–TO–LOCK BUTTON, LED PLATE, RELAY, AND TRANSFORMER ARE TO BE SUPPLIED UNDER ARCHITECTURAL DIVISION. INSTALLATION OF ALL COMPONENTS SHALL BE BY DIVISION 26. SUPPLY OF ALL WIRING, RACEWAYS AND BACKBOXES SHALL BE BY DIV.26. COORDINATE INSTALLATION WITH OTHER TRADES DURING CONSTRUCTION. STANDARD OF ACCEPTANCE FOR DOOR OPERATOR IS HORTON – SERIES 710D SURFACE APPLIED

REFER TO ARCHITECTURAL DRAWINGS FOR DEVICE/EQUIPMENT HEIGHT AND LOCATION PRIOR TO ROUGH–IN. ROUGH–IN ACCORDINGLY.

CONTRACTOR TO PROVIDE POWER FOR THE NEW DEVICES FROM THE NEAREST ELECTRICAL PANEL. PROVIDE ALL BREAKERS, WIRING AND CONDUITS.

VERIFY ON SITE LOCATION OF LOCAL DISCONNECT OF EQUIPMENT.

NOT THE GRANTING OF A PERMIT NOR REVIEWING OF SPECS & DRAWINGS NOR INSPECTIONS MADE DURING INSTALLATION BY THE OFFICIAL HAVING JURISDICTION SHALL RELIEVE THE OWNER FROM REQUIREMENTS OF THE ONTARIO BUILDING CODE AND ANY OTHER REFERENCED REQUIREMENTS.

Waterloo Region District School Board

NOTE:
This drawing and all associated documentation are the confidential property of BJC architects + assocs. inc. and must be returned upon request. Any duplication, reuse, revision and/or distribution in part or whole without the prior written authorization of BJC architects + assocs. inc. is strictly prohibited. Each contractor will check and verify all dimensions and report all errors and omissions to the design professional whose seal is affixed to this drawing. Do not scale this drawing.
The information and material herein reflect the best judgement of BJC architects + assocs. inc., in light of the information available to them at the time of preparation of these documents. Any use which a third party makes of these documents, or any reliance on or decisions to be made based on them, is the sole responsibility of such third party. BJC architects + assocs. inc. accepts no responsibility for damages, if any, suffered by any third party as a result of decisions made or actions based on these documents © BJC architects + assocs. inc. 2026.

No.	REVISIONS	date
03	RE–ISSUED FOR PERMIT	2026.06.01
02	ISSUED FOR ADDENDUM #1	2026.04.20
01	ISSUED FOR TENDER	2026.03.24

PROJECT NORTH
TRUE NORTH
scale AS NOTED

Consultant:
SAB ENGINEERING Inc.
188 EDWARD AVE., UNIT 25, RICHMOND HILL, ONT., L4C 9Y8
TEL. (905) 787 8885 FAX (905) 787 6771

drawn JM
last worked on 2026.03.06 by JM
checked O.S.
print date 24/03/26

BJC architects inc.
R.R.#2 8016 HIGHWAY #7, GUELPH, ONTARIO, CANADA N1H 6H8
TEL. (519) 822.7390 FAX (519) 822.5881
www.bjcarchitects.com

client
WATERLOO REGION DISTRICT SCHOOL BOARD
51 ARDELT AVENUE
KITCHENER ONTARIO

project
CHALMERS PUBLIC SCHOOL RENOVATION
35 CHALMERS STREET SOUTH
CAMBRIDGE ONTARIO

drawing title
LIGHTING & F/A LAYOUT – DEMO & NEW WORK

reference

project no. 25–104
client reference number

sheet no. E-02 01

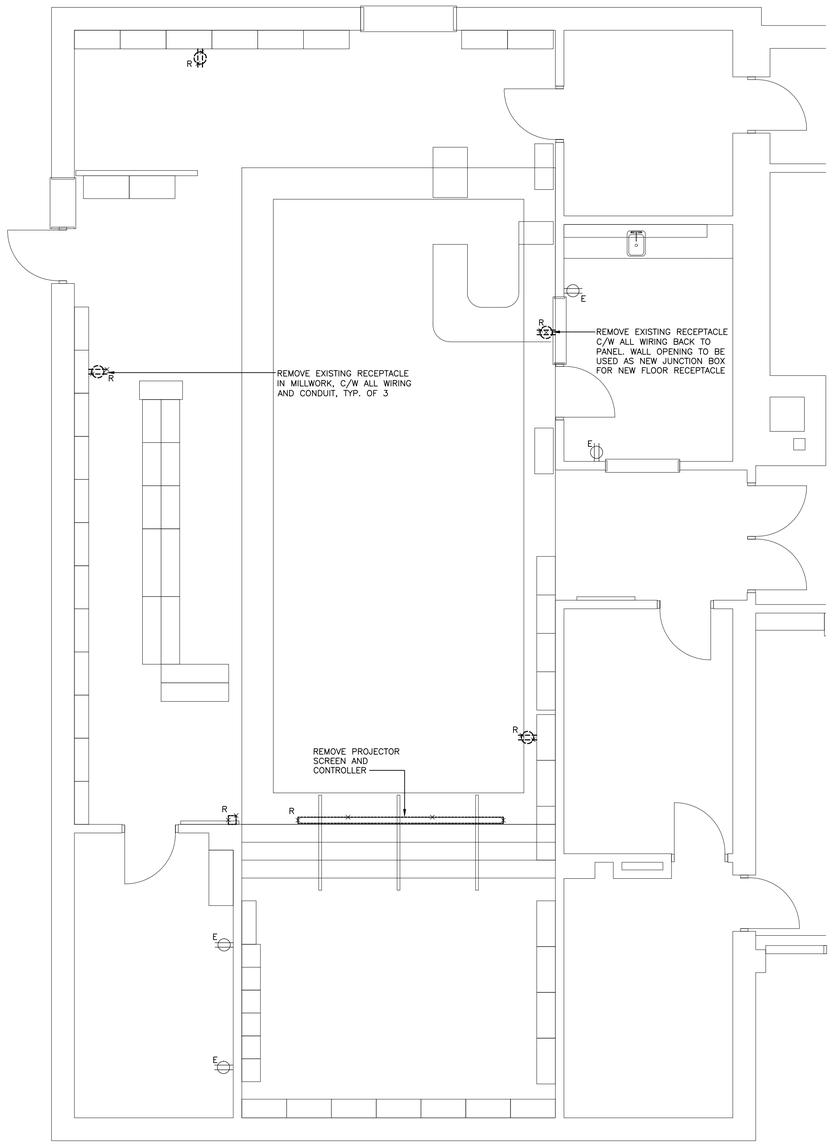

GROUND FLOOR LIBRARY – POWER LAYOUT – EXISTING AND DEMO WORK
SCALE: 1:50

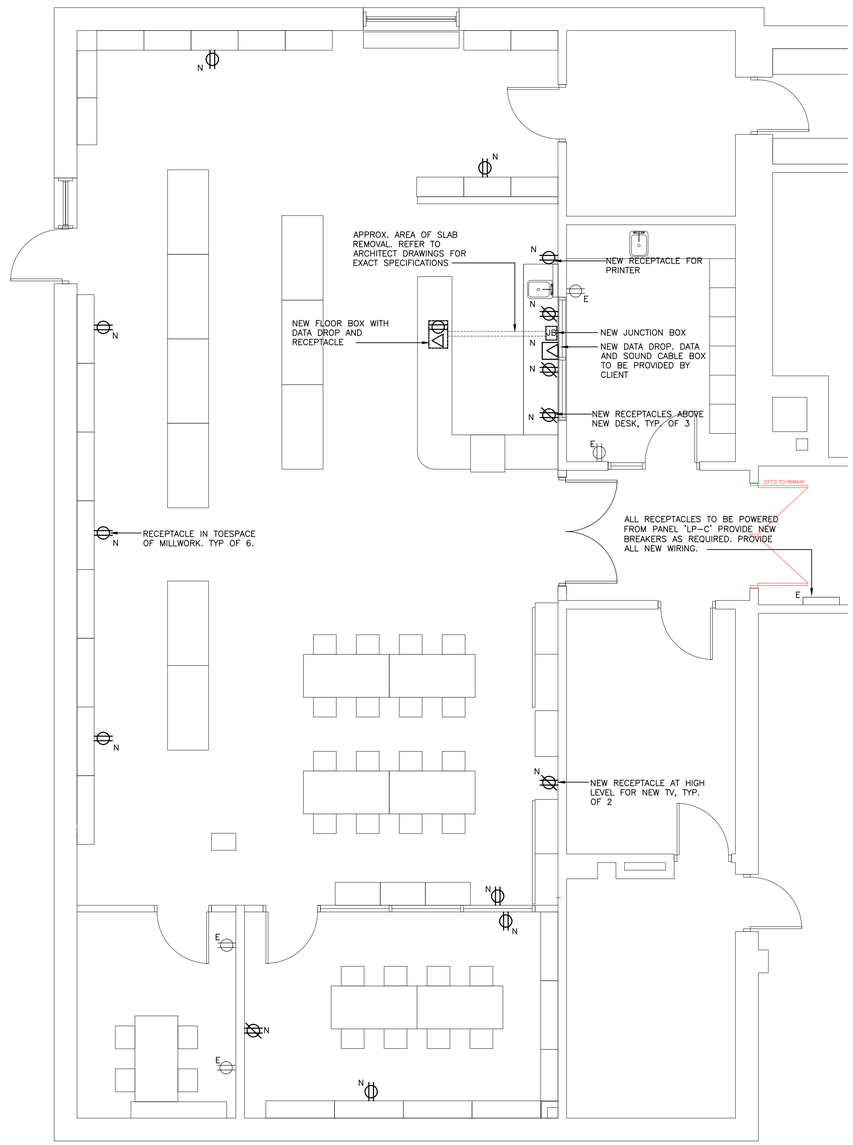

GROUND FLOOR LIBRARY – POWER LAYOUT – NEW WORK
SCALE: 1:50

NEW WORK NOTES:

ELECTRICAL CONTRACTOR SHALL EXERCISE EXTREME CAUTION IN EXCAVATING AND TRENCHING ON THIS SITE TO AVOID EXISTING CONDUITS, PIPING AND DUCTS, ETC. AND TO PREVENT HAZARD TO PERSONNEL AND DAMAGE TO EXISTING UNDERGROUND UTILITIES OR STRUCTURES. THE ENGINEER IS NOT RESPONSIBLE FOR THE LOCATION OF UNDERGROUND UTILITIES OR STRUCTURES WHETHER OR NOT SHOWN OR DETAILED AND INSTALLED BY THIS OR ANY OTHER CONTRACTS. THE CONTRACTOR SHALL IMMEDIATELY NOTIFY THE OWNER SHOULD SUCH UNIDENTIFIED CONDITIONS BE DISCOVERED. THESE DRAWINGS AND SPECIFICATIONS DO NOT INCLUDE NECESSARY COMPONENTS FOR CONSTRUCTION SAFETY.

NEW FLOOR BOX SHALL BE LEGRAND RFBA SERIES, 2 GANG MINIMUM CAPACITY, C/W COVER

NOT THE GRANTING OF A PERMIT NOR REVIEWING OF SPECS & DRAWINGS NOR INSPECTIONS MADE DURING INSTALLATION BY THE OFFICIAL HAVING JURISDICTION SHALL RELIEVE THE OWNER FROM REQUIREMENTS OF THE ONTARIO BUILDING CODE AND ANY OTHER REFERENCED REQUIREMENTS.

Waterloo Region District School Board

NOTE:
This drawing and all associated documentation are the confidential property of BJC architects + assocs. inc. and must be returned upon request. Any duplication, reuse, revision and/or distribution in part or whole without the prior written authorization of BJC architects + assocs. inc. is strictly prohibited. Each contractor will check and verify all dimensions and report all errors and omissions to the design professional whose seal is affixed to this drawing. Do not scale this drawing.
The information and material herein reflect the best judgement of BJC architects + assocs. inc., in light of the information available to them at the time of preparation of these documents. Any use which a third party makes of these documents, or any reliance on or decisions to be made based on them, is the sole responsibility of such third party. BJC architects + assocs. inc. accepts no responsibility for damages, if any, suffered by any third party as a result of decisions made or actions based on these documents © BJC architects + assocs. inc. 2026.

No.	REVISIONS	date
01	ISSUED FOR TENDER	2026.03.24

PROJECT NORTH
TRUE NORTH
scale AS NOTED

Consultant:
SAB ENGINEERING Inc.
588 EDWARD AVE., UNIT 25, RICHMOND HILL, ONT., L4C 9Y6
TEL. (905) 787 8885 FAX (905) 787 8771

drawn JM
last worked on 2026.03.24 by JM
checked O.S.
print date 24/03/26

BJC architects inc.
R.R.#2 8016 HIGHWAY#7, GUELPH, ONTARIO, CANADA N1H 6H8
TEL. (519) 822.7390 FAX (519) 822.5881
www.bjcarchitects.com

client
WATERLOO REGION DISTRICT SCHOOL BOARD
51 ARDELT AVENUE
KITCHENER ONTARIO

project
CHALMERS PUBLIC SCHOOL RENOVATION
35 CHALMERS STREET SOUTH
CAMBRIDGE ONTARIO

drawing title
POWER LAYOUT LAYOUT – DEMO & NEW WORK

reference

project no. 25-104
client reference number

sheet no. E-03 01

NOT THE GRANTING OF A PERMIT NOR REVIEWING OF SPECS & DRAWINGS NOR INSPECTIONS MADE DURING INSTALLATION BY THE OFFICIAL HAVING JURISDICTION SHALL RELIEVE THE OWNER FROM REQUIREMENTS OF THE ONTARIO BUILDING CODE AND ANY OTHER REFERENCED REQUIREMENTS.

REVISION HISTORY			
REV	DESCRIPTION	DATE	APPROVED

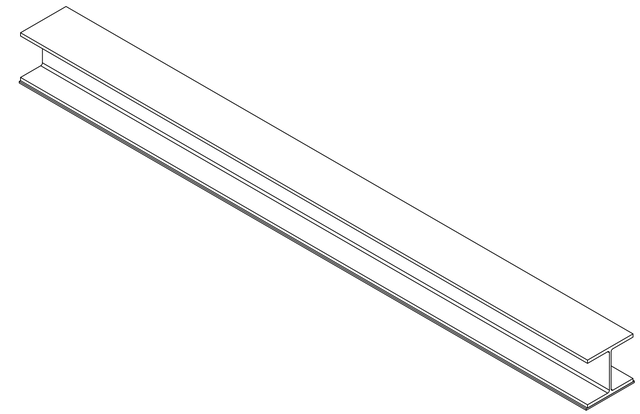

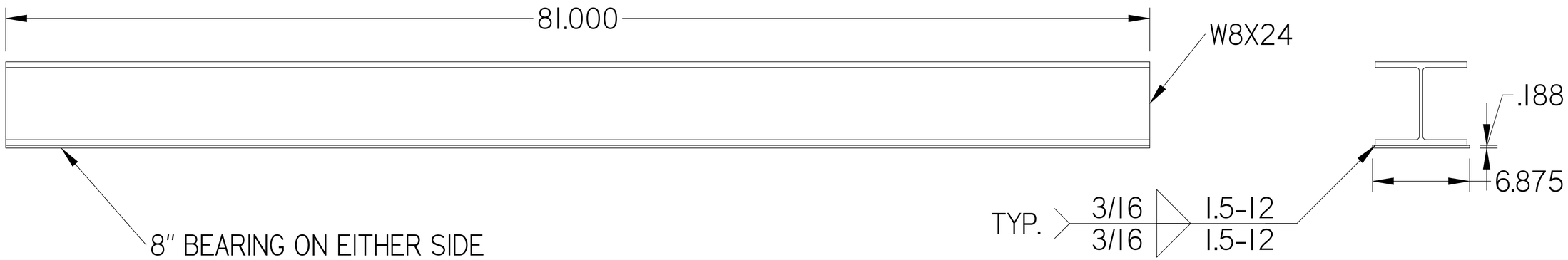

06-15-26

Reviewed as noted:

Michael Shifflett P.Eng.
Shifflett Engineering Ltd.

MATERIAL: STEEL
FINISH: PRIMED
QUANTITY: 1

LICENSED PROFESSIONAL ENGINEER
June 3,2026
N. M. N. MANSOUR
100058882
PROVINCE OF ONTARIO

for Connections Only
Lintel Beam section provided in drawing A110

	NAME	DATE
DRAWN	G.W.	06/02/26
CHECKED		
ENG APPR		
MGR APPR		

UNLESS OTHERWISE SPECIFIED
DIMENSIONS ARE IN INCHES
ANGLES ±X.X°
2 PL ±X.XX 3 PL ±X.XXX

OCEL METAL FAB

TITLE: BEAM LINTEL

SIZE: D | DWG NO: 1 | REV: 1

FILE NAME: Beam Lintel.dft

SCALE: | WEIGHT: | SHEET 1 OF 1