COMMON PIPING SYSTEM LEGEND

OR — PIPING, REFER TO PIPING IDENTIFICATION SCHEDULE

DIRECTION OF FLOW IN PIPE

ELECTRIC HEAT TRACING SYSTEM (WHEN ASSOCIATED PIPING IS NOT FOR FIRE PROTECTION)

HTCP — HEAT TRACE CONTROL PANEL

OR — PIPE UP

OR — PIPE DOWN

OR — CONNECTION TO RISER

OR — ELBOW

OR — TEE

OR — CROSSED TEE

OR — TOP RUNOUT CONNECTION

OR — BOTTOM RUNOUT CONNECTION

PIPE CONNECTIONS TO EQUIPMENT (SEE DETAILS FOR ACCESSORIES)

XXXX — SUPPLY AND RETURN PIPING RUNOUTS TO EQUIPMENT 'XXXX' = LIQUID FLOW RATE (WHEN LIQUID FLOW RATE IS NOT NOTED, REFER TO SCHEDULE(S) OF THE ASSOCIATED EQUIPMENT)

UNION

FLANGE

FLEXIBLE CONNECTOR

CONCENTRIC REDUCER

ECCENTRIC REDUCER

CAP (SCREWED OR FLANGED)

CAP (WELDED)

ISOLATION VALVE (TYPE SHALL BE AS PER SPECIFICATIONS)

BALL VALVE

BUTTERFLY VALVE

PLUG VALVE

GATE VALVE

LOCKSHIELD VALVE

GLOBE VALVE

DOUBLE REGULATING (CIRCUIT BALANCING) VALVE FOR EQUIPMENT C/W REDUCERS LIQUID FLOW RATE TO MATCH EQUIPMENT FLOW RATE.

XXXX — DOUBLE REGULATING VALVE (CIRCUIT BALANCING VALVE) FOR BRANCH PIPING C/W REDUCERS 'XXXX' = LIQUID FLOW RATE

DIRECTION OF FLOW — CHECK VALVE

MANUAL 3-WAY VALVE

DIRECTION OF FLOW — PRESSURE REGULATING VALVE, SELF-OPERATED

DIRECTION OF FLOW — PRESSURE REGULATING VALVE, EXTERNALLY OPERATED

XXXX — PRESSURE RELIEF VALVE IF SHOWN 'XXXX' = RELIEF PRESSURE SETPOINT

XXXX — PRESSURE RELIEF VALVE WITH DRIP PAN BELOW IF SHOWN 'XXXX' = RELIEF PRESSURE SETPOINT

DIRECTION OF FLOW — Y-STRAINER

DIRECTION OF FLOW — Y-STRAINER WITH BLOWOUT

BASKET STRAINER

EJ — EXPANSION JOINT

RUN ANCHOR

MAIN ANCHOR

EJ — GUIDE

VL — VARIABLE LOAD SUPPORT

CL — CONSTANT LOAD SUPPORT

ISOLATION HANGER

P — PRESSURE GAUGE

T — TEMPERATURE GAUGE

COMBINATION PRESSURE AND TEMPERATURE TEST PLUG

MV — MANUAL AIR VENT

AAV — AUTOMATIC AIR VENT ASSEMBLY

DRAIN VALVE AND CAP

PUMP (SCHEMATIC)

M — METER

FILTER

PIPING IDENTIFICATION (1)

#-YYYY OR #-YYYY OR # YYYY

'YYYY' = PIPE TYPE AS DESCRIBED BY ABBREVIATION BELOW
IF SHOWN, '#' = NPS SIZE OF THE PIPE
IF SHOWN AND PRECEDED BY 'Ø', '#' = DN SIZE OF THE PIPE

LINETYPE	PIPE TYPE
— · —	DOMESTIC COLD WATER
— - - —	DOMESTIC HOT WATER
— - - - —	DOMESTIC HOT WATER RECIRCULATION
———	DRAIN LINE (NON-BURIED) (SEE TEXT ABBREVIATION)
———	DRAIN LINE (BURIED OR ON FLOOR BELOW) (SEE TEXT ABBREVIATION)
— —	PLUMBING VENT
— —	VENT (SEE TEXT ABBREVIATION)
———	SUPPLY LINE (SEE TEXT ABBREVIATION)
———	RETURN LINE (SEE TEXT ABBREVIATION)

ABBREVIATION	PIPE TYPE
	PLUMBING AND DRAINAGE
SAN	SANITARY
STM	STORM
PSAN	PUMPED SANITARY
PSTM	PUMPED STORM
OF	OVERFLOW (STORM)
BFPZ	ZONE BACKFLOW PROTECTED WATER (SEE PIPE LINETYPE)
	FIRE PROTECTION
F	FIRE PROTECTION SUPPLY
FSP	FIRE STANDPIPE
SP	FIRE SPRINKLER
PA	PRE-ACTION SPRINKLER
DRY	DRY PIPE SPRINKLER
CA-F	CLEAN AGENT
FDC	FIRE DEPARTMENT CONNECTION

MISCELLANEOUS LEGEND

EXISTING MECHANICAL EQUIPMENT OR SERVICE TO REMAIN

EXISTING MECHANICAL EQUIPMENT OR SERVICE TO BE REMOVED

RL — EXISTING MECHANICAL EQUIPMENT OR SERVICE TO BE RELOCATED

RL — NEW LOCATION OF RELOCATED MECHANICAL EQUIPMENT OR SERVICE

Acc(XX) EQUIP — PROTECTED SPACE RESERVED FOR SERVICING AND ACCESS WITH CLEAR HEIGHT OF XXm

XX/YY — DEMARCATION POINT
ITEMS TO THE LEFT OF THE POINT ARE BY DIV. 'XX'
ITEMS TO THE RIGHT OF THE POINT ARE BY DIV. 'YY'

APPROXIMATE LOCATION (±3m [10ft]) OF A SOURCE OF 120V/1PH/60Hz, 15A, POWER PROVIDED BY ELECTRICAL DIVISION. MECHANICAL DIVISION TO PROVIDE WIRING FROM THIS POINT TO CONTROLS, FIXTURES, AND EQUIPMENT THAT IS NOT DIRECTLY WIRED BY ELECTRICAL DIVISION.

AP OR AP — ACCESS PANEL/DOOR FOR SPECIFIC PURPOSE PROVIDED IN ADDITION TO THOSE DESCRIBED IN SPECIFICATIONS.
WALL TYPE SHOWN ON LEFT
CEILING TYPE SHOWN ON RIGHT

NOMINAL SIZES FOR PIPING AND TUBING

NOMINAL PIPE SIZE (NPS)	DIAMETRE NOMINAL (DN)
1/2	15
5/8	--
3/4	20
1	25
1 1/4	32
1 1/2	40
2	50
2 1/2	65
3	80
4	100
6	150
8	200
10	250
12	300
14	350
16	400
18	450
20	500
24	600

- THE PIPE SIZES SHOWN ARE NOMINAL SIZES.
- MATERIAL OF PIPING/TUBING TO BE AS SHOWN AND AS SPECIFIED.
- REFER TO SPECIFICATIONS FOR ASSOCIATED PIPING/TUBING STANDARDS THAT DEFINE THE DIMENSIONS.

EQUIPMENT LABELS

XXX.## — ITEM NUMBER
CATEGORY LABEL

LABEL	DESCRIPTION
AC	SPLIT SYSTEM AIR CONDITIONER OR AIR SOURCE HEAT PUMP (INDOOR UNIT)
AHU	AIR HANDLING UNIT
ATU	AIR TERMINAL UNIT
B	BOILER
CC	COOLING COIL
CH	CHILLER
CT	COOLING TOWER
CU	CONDENSING UNIT / CONDENSER
DOAU	DEDICATED OUTDOOR AIR UNIT
DWH	DOMESTIC WATER HEATER
ECU	EVAPORATIVE COOLING UNIT
EF	EXHAUST FAN
ERD	ENERGY RECOVERY DEVICE
ERV	ENERGY RECOVERY VENTILATOR
FC	FAN COIL
FPB	FAN POWERED TERMINAL BOX
H	HEATER
HC	HEATING COIL
HE	HEAT EXCHANGER
HP	WATER SOURCE HEAT PUMP
HUM	HUMIDIFICATION GENERATOR
HUMD	HUMIDIFIER
M	METER
MAU	MAKE-UP AIR UNIT
ME	MISCELLANEOUS EQUIPMENT
P	PUMP
PRV	PRESSURE REDUCING VALVE
RF	RETURN FAN
RHC	REHEAT COIL
RTU	ROOFTOP UNIT
SF	SUPPLY FAN
SL	SILENCER
T	TANK
TF	TRANSFER FAN
UH	UNIT HEATER
V	VALVE

PLUMBING FIXTURE LABELS

XXX## — '##' = REFERENCE (SHOWN WHEN THERE ARE MULTIPLE TYPES)
'XXX' = CATEGORY LABEL

LABEL	DESCRIPTION
AD	AREA DRAIN
BT	BATHTUB
DF	DRINKING FOUNTAIN
FD	FLOOR DRAIN
FDF	FUNNEL FLOOR DRAIN
FDM	FLOOR DRAIN FOR FINISHED MEMBRANE FLOORS
FFFD	FLOOR DRAIN FOR FLOATING FLOORS
FRFD	FLUSHING RIM FLOOR DRAIN
HD	HUB DRAIN
HDX	HUB DRAIN FOR FIRE PROTECTION
JS	JANITOR SINK
KFD	FLOOR DRAIN FOR KITCHENS
L	LAVATORY
LFD	FLOOR DRAIN FOR LABORATORIES
LFDM	FLOOR DRAIN FOR LABORATORIES WITH MEMBRANE FLOORS
PAD	AREA DRAIN FOR PARKING DECKS
PD	PIT DRAIN
RD	ROOF DRAIN
RDD	DECK DRAIN
RDG	GREEN ROOF DRAIN
RDV	ROOF DRAINS - IRMA ROOF
S	SINK
SAN-TD	SANITARY TRENCH DRAIN
SAN-TDH	SANITARY TRENCH DRAIN - TRUCK ENTRANCES
SD	SHOWER DRAIN
SDA	SHOWER DRAIN WITH ANGLE GRATE
SH	SHOWER
TAD	AREA DRAIN FOR TRUCK DOCKS
TD	TRENCH DRAIN
TDM	TRENCH DRAIN - MEMBRANE
TDS	TRENCH DRAIN - SHALLOW SLABS
TDT	TRENCH DRAIN - TRUCK ENTRANCES
TMV	TEMPERATURE MIXING VALVE
U	URINAL
VTR	PLUMBING VENT THROUGH ROOF
W	WATER CLOSET

GENERAL
1. THIS LEGEND APPLIES TO THE WORK UNDER DIVISIONS 20 TO 25.
2. THESE DRAWINGS SHALL BE READ IN CONJUNCTION WITH THE SPECIFICATIONS SECTIONS OF DIVISION 20 TO 25 AND THE APPLICABLE SECTIONS OF DIVISION 01.
3. ITEMS SHOWN SCREENED ARE EXISTING TO REMAIN
4. NOT ALL SYMBOLS IN THE LEGENDS ARE PRESENT ON THE DRAWINGS
5. ITEMS SHOWN ARE DIAGRAMMATIC AND ILLUSTRATE THE GENERAL LOCATION OF EQUIPMENT AND GENERAL ROUTING OF PIPING AND DUCTWORK. CONTRACTOR SHALL VERIFY ALL ITEMS ON SITE PRIOR TO COMMENCING WORK.
6. UNLESS OTHERWISE NOTED, PIPE SIZES ARE SHOWN IN NOMINAL PIPE SIZE (NPS)
7. UNLESS OTHERWISE NOTED, DUCT SIZES ARE SHOWN IN MILLIMETRE (mm)
8. UNLESS OTHERWISE NOTED, ALL DIMENSIONS ARE IN MILLIMETRE (mm)
9. UNLESS OTHERWISE NOTED, ALL AIR FLOW RATES ARE LISTED IN LITRES PER SECOND (L/s)
10. UNLESS OTHERWISE NOTED, ALL LIQUID FLOW RATES ARE LISTED IN LITRES PER SECOND (L/s)
11. THE EXISTING ITEMS SHOWN HAS BEEN TAKEN FROM BEST AVAILABLE SOURCE AND DOES NOT NECESSARILY CAPTURE ALL AS-BUILT CONDITIONS. CONTRACTOR TO VERIFY & CONFIRM MECHANICAL LAYOUT AND EQUIPMENT PRIOR TO CARRYING OUT ANY PORTION OF MECHANICAL WORK. WORK TO BE COORDINATED WITH ARCHITECTURAL DRAWINGS.

PIPING SYSTEMS:
1. FOR WORK IN EXISTING BUILDINGS, CONTRACTOR SHALL ALLOW FOR DRAINING OF THE SYSTEMS AS REQUIRED TO COMPLETE WORK
2. FOR WORK IN EXISTING BUILDINGS, ASSUME EXISTING SHUT-OFF VALVES ARE HOLDING
3. CAP ALL PIPE ENDS DURING DEMOLITION
4. ALL SANITARY PIPING SHOWN TO HAVE A MINIMUM 1% SLOPE UNLESS OTHERWISE INDICATED
5. CO-ORDINATE LOCATION OF DEVICES LOCATED IN CEILING REQUIRING ACCESS (VALVES, REGULATORS, ETC.) WITH CEILING ACCESS PANELS
6. FOR WORK IN EXISTING BUILDINGS, SIZE AND EXACT LOCATION OF EXISTING RISERS TO BE CONFIRMED ON SITE

VENTILATION SYSTEMS:
1. FOR WORK IN EXISTING BUILDINGS, ALL DUCT COLLARS MADE REDUNDANT BY THE PROJECT SHALL BE CAPPED OFF
2. FOR WORK IN EXISTING BUILDINGS, DURING CONSTRUCTION, COVER OPEN ENDS OR REGISTERS/GRILLES OF ACTIVE RETURN AND EXHAUST AIR DUCTS WITH FILTER MEDIA SECURED BY METAL BAND PULLED TIGHT AROUND DUCT BY MEANS OF SCREWS. MAINTAIN THIS MEDIA UNTIL WORK IN AREA IS COMPLETED.
3. LENGTH OF FLEX DUCT SHALL NOT EXCEED 1800mm (6'-0"). USE RIGID ROUND DUCT IF THE DISTANCE BETWEEN THE AIR TERMINAL AND THE SPIN-ON CONNECTION/BRANCH TAP REQUIRES LONGER LENGTHS.
4. ALL SUPPLY AIR DUCTWORK INCLUDING FLEX DUCTS SHALL BE INSULATED
5. SERVICES ABOVE RETURN GRILLES TO BE PAINTED FLAT BLACK

CONTROLS:
1. SPACE TEMPERATURE SENSORS, THERMOSTATS, SPACE HUMIDITY SENSORS, AND HUMIDISTATS TO BE APPROXIMATELY 1200mm (4'-0") AFF AND ALIGNED WITH LIGHT SWITCHES. FINAL LOCATION TO BE REVIEWED WITH THE CONSULTANT PRIOR TO INSTALLATION.
2. FOR WORK IN EXISTING BUILDINGS, CONTROLS WORK TO BE CARRIED OUT BY BASE BUILDING CONTROLS CONTRACTOR

DEMOLITION
1. DEMOLISH SYSTEMS AND EQUIPMENT WHERE SHOWN ON DRAWINGS OR SPECIFICATIONS. OTHERWISE, EXISTING SYSTEMS AND EQUIPMENT ARE TO REMAIN, EVEN IF NOT SHOWN ON THE DRAWINGS.

DRAWING LIST

M0-00	MECHANICAL LEGEND AND DRAWING LIST - SHEET 1
M0-01	MECHANICAL LEGEND AND DRAWING LIST - SHEET 2
M1-00	EQUIPMENT SCHEDULES
M1-01	MECHANICAL DETAILS
M2-00	PLUMBING SERVICES PLAN
M3-00	FIRE PROTECTION SERVICES PLAN
M4-00	HVAC SERVICES PLAN
M9-01	PLUMBING DEMOLITION PLAN
M9-02	FIRE PROTECTION DEMOLITION PLAN
M9-03	HVAC DEMOLITION PLAN

ABBREVIATIONS

AFF	ABOVE FINISHED FLOOR
C/W	COMPLETE WITH
CTE	CONNECT TO EXISTING
DCW	DOMESTIC COLD WATER
DHW	DOMESTIC HOT WATER
DHWR	DOMESTIC HOT WATER RECIRCULATION
DN	DOWN
EA	EXHAUST OR RELIEF AIR
OA	OUTDOOR AIR
OED	OPEN ENDED DUCT
RA	RETURN AIR
RWL	RAIN WATER LEADER
SA	SUPPLY AIR
(TYP.)	TYPICAL OF MULTIPLE INSTANCES
(TYP. #)	TYPICAL FOR QUANTITY '#'
(TYP. XXX)	TYPICAL FOR 'XXX', WHERE 'XXX' PROVIDES DESCRIPTION
U/C	UNDER CUT
VFD	VARIABLE FREQUENCY DRIVE

HHAngus

Project
WLU-Waterloo Campus Faculty of Education
Wilfrid Laurier University Waterloo Campus
75 University Avenue West
Waterloo, ON N2L 3B5

Prepared For
Wilfrid Laurier University
75 University Avenue West
Waterloo, ON N2L 3C5

HOK, Inc.
480 University Avenue, Suite 1100
Toronto, Ontario M5G 1V2 Canada
t +1 416 203 9993
www.hok.com/studios/toronto

All reproduction & intellectual property rights reserved © 2025

In Association with

HHAngus
Mechanical & Electrical Engineering
1176 Eglinton Avenue East, Suite 800
Toronto, ON M3C 0S1

SPECTECH Technology Consulting and Project Management
Communications Engineering
201-17360 Yonge Street
Newmarket, ON L3Y 7R6

Key Plan

Professional Seals

LICENSED PROFESSIONAL ENGINEER
M. MAROTTA
100541014
2026-10-29
PROVINCE OF ONTARIO

No.	Description	Date
01	ISSUED FOR 100% DD	08/21/2026
02	ISSUED FOR 60% CD	09/17/2026
03	ISSUED FOR 90% CD	10/08/2026
04	ISSUED FOR PERMIT/TENDER	10/29/2026

Project No: 2251005

Sheet Title

MECHANICAL LEGEND AND DRAWING LIST - SHEET 1

Original is 42 x 30. Do not scale contents of this drawing.

Sheet Number

M0-00

PLUMBING LEGEND

	FLOOR DRAIN, AREA DRAIN, OR FLOOR SINK
	FUNNEL FLOOR DRAIN
XX	CUSTOM FUNNEL DRAIN. REFER TO ASSOCIATED DRAWING NOTE FOR DETAILS.
LxW	TRENCH DRAIN. 'L' = ACTIVE LENGTH 'W' = ACTIVE WIDTH
	ROOF DRAIN
	ROOF DRAIN ABOVE
	SCUPPER DRAIN
	CATCH BASIN
	DRAIN (SCHEMATIC)
	CONNECTION TO PLUMBING FIXTURE VIA P-TRAP
	RUNNING TRAP
CO	CLEANOUT
CO	FLOOR CLEANOUT TOP SYMBOL USED FOR PLANS THAT ARE ASSOCIATED WITH THE CLEANOUT'S ACCESS. BOTTOM SYMBOL USED FOR PLANS THAT ARE ASSOCIATED WITH THE CLEANOUT'S PIPING.
HB	WALL HYDRANT
NFWH	NON-FREEZE WALL HYDRANT
AFBV X-Y.Y	AUTOMATIC FLOW BALANCING VALVE AS PER SECTION 22 05 23 C/W REDUCERS 'X' = VALVE SIZE 'Y.Y' = FLOW RATE
BFP XXXX	BACK-FLOW PREVENTER 'XXXX' = 'DCVA' DENOTES DOUBLE CHECK VALVE ASSEMBLY 'XXXX' = 'RP' DENOTES REDUCED PRESSURE PRINCIPLE
TSP	TRAP SEAL PRIMER PANEL

FIRE PROTECTION SYSTEMS LEGEND

	PENDANT SPRINKLER HEAD
EC	EXTENDED COVERAGE PENDANT SPRINKLER HEAD
	UPRIGHT SPRINKLER HEAD
EC	EXTENDED COVERAGE UPRIGHT SPRINKLER HEAD
	DRY PENDANT SPRINKLER HEAD
EC	EXTENDED COVERAGE DRY PENDANT SPRINKLER HEAD
	SIDEWALL SPRINKLER HEAD
EC	EXTENDED COVERAGE SIDEWALL SPRINKLER HEAD
	CONCEALED SPRINKLER HEAD
EC	EXTENDED COVERAGE CONCEALED SPRINKLER HEAD
	INSTITUTIONAL SPRINKLER HEAD
	WINDOW SPRINKLER HEAD
	SMOKE DETECTOR
	HEAT DETECTOR
SV XX	SUPERVISED VALVE 'XX' = SUPERVISED VALVE NUMBER
	ALARM VALVE
	DRY-PIPE VALVE
	DELUGE VALVE
	PRE-ACTION VALVE
AMD	AIR MAINTENANCE DEVICE
SCC	SPRINKLER CONTROL CABINET
	FIRE DEPARTMENT CONNECTION (SURFACE MOUNTED)
	FIRE DEPARTMENT CONNECTION (FLUSH MOUNTED)
FHC	FIRE HOSE CABINET
FHC	FIRE HOSE CONNECTION CABINET
HC	FIRE HOSE CONNECTION (EXPOSED)
SV XX BFP SV YY	BACK-FLOW PREVENTER C/W SUPERVISED VALVES 'XX' = SUPERVISED VALVE NUMBER 'YY' = SUPERVISED VALVE NUMBER
PT	PRESSURE SWITCH (TROUBLE)
PA	PRESSURE SWITCH (ALARM)
FS	FLOW SWITCH
	LISTED HEAT TRACING SYSTEMS FOR FIRE PROTECTION (WHEN ASSOCIATED PIPING SERVES FIRE PROTECTION)
FHTCP	LISTED HEAT TRACE CONTROLLER FOR FIRE PROTECTION
FE	FIRE EXTINGUISHER
FE	FIRE EXTINGUISHER CABINET

VENTILATION SYSTEMS LEGEND (2)

UP OR UP	DUCT OFFSET UP
DN OR DN	DUCT OFFSET DOWN
OR	FLEXIBLE DUCT
OR	FLEXIBLE CONNECTION
D OR D	BALANCING DAMPER
BDD OR BDD	BACKDRAFT DAMPER
OR	MOTORIZED DAMPER
FD OR FD	FIRE DAMPER
MFD OR MFD	MOTORIZED FIRE DAMPER
SD OR SD	SMOKE DAMPER
CSFD OR CSFD	COMBINATION FIRE AND SMOKE DAMPER
OR	SILENCER
OR	DUCT-MOUNTED COIL
H OR H	DUCT-MOUNTED HUMIDIFIER IN SECTION OF WATERPROOF DUCT
XX YYYYY OR XX YYYYY	AIR TERMINAL UNIT 'XX' = UNIT SIZE 'YYYYY' = AIR TERMINAL UNIT REFERENCE
XX YYYYY OR XX YYYYY	AIR TERMINAL UNIT WITH HYDRONIC REHEAT COIL 'XX' = UNIT SIZE 'YYYYY' = AIR TERMINAL UNIT REFERENCE
XX YYYYY OR XX YYYYY	AIR TERMINAL UNIT WITH ELECTRIC REHEAT COIL 'XX' = TERMINAL BOX SIZE 'YYYYY' = AIR TERMINAL UNIT REFERENCE
	FAN (SCHEMATIC)
XX YYY OR XX YYY OR XX YYY OR XX YYY OR XX YYY OR XX YYY	'XX' = SUPPLY REGISTER, GRILLE, OR DIFFUSER TYPE REFERENCE 'YYY' = AIRFLOW RATE IF SHOWN, ARROW(S) REFER TO THE AIRFLOW DIRECTION(S) FOR AIR PATTERN CONTROLLER / DEFLECTION DAMPER SETTINGS.
ZZZ XX OR ZZZ XX	'XX' = RETURN/EXHAUST GRILLE TYPE REFERENCE IF SHOWN, 'ZZZ' = AIRFLOW RATE
XX-### YYY OR XX-### YYY	SUPPLY DIFFUSER '###' = NECK SIZE IF SHOWN, SHADED REGION = BLANK OFF AIRFLOW IN THAT DIRECTION
XX-### YYY OR XX-### YYY	ROUND SUPPLY DIFFUSER '###' = NECK SIZE
XX-###x### YYY OR XX-###x### YYY	CEILING SUPPLY REGISTER / GRILLE '###x###' = REGISTER / GRILLE SIZE
XX-###x### YYY OR XX-###x### YYY	SIDEWALL SUPPLY REGISTER / GRILLE '###x###' = REGISTER / GRILLE SIZE
ZZZ XX-###x### OR ZZZ XX-###x###	CEILING PLENUM RETURN GRILLE '###x###' = GRILLE SIZE
ZZZ XX-###x### OR ZZZ XX-###x###	CEILING RETURN/EXHAUST GRILLE '###x###' = GRILLE SIZE
ZZZ XX-###x### OR ZZZ XX-###x###	SIDEWALL RETURN/EXHAUST GRILLE '###x###' = GRILLE SIZE
XX-### YYY OR XX-### YYY	PLENUM SLOT / T-BAR DIFFUSER '###' = NECK SIZE
LxN XX-# YYY OR LxN XX-# YYY	SLOT DIFFUSER C/W PLENUM BLOCK '#' = NUMBER OF SLOTS 'YYY' = LEAVING AIRFLOW (EACH PLENUM BLOCK) 'L' = PLENUM LENGTH 'N' = NECK SIZE TOTAL SLOT LENGTH SHALL BE AS PER ARCHITECTURAL DRAWINGS BLANK OFF PORTIONS OF SLOTS NOT COVERED BY PLENUM BLOCK.
XX-### YYY OR XX-### YYY	LIGHT TROFFER DIFFUSER (SINGLE BOOT) '###' = NECK SIZE ATTACH TO LIGHT FIXTURE
XX-### YYY OR XX-### YYY	LIGHT TROFFER DIFFUSER (DOUBLE BOOT), TOP CONNECTION '###' = NECK SIZE ATTACH TO LIGHT FIXTURE
XX-### YYY OR XX-### YYY	LIGHT TROFFER DIFFUSER (DOUBLE BOOT), SIDE CONNECTION '###' = NECK SIZE ATTACH TO LIGHT FIXTURE
IH	ISOLATION HANGER
AFM OR AFM	AIRFLOW MEASURING STATION

VENTILATION SYSTEMS LEGEND (1)

WxH OR WxH WxH OR WxH	RECTANGULAR DUCT
ØD OR ØD ØD OR ØD	ROUND DUCT
OR	DUCTWORK TO BE ACOUSTICALLY LINED
OR	INSULATE DUCTWORK THAT IS NOT NORMALLY INSULATED AS DESCRIBED BY THE SPECIFICATIONS. [NOTE 1].
OR	FIRE PROTECTED DUCTWORK.
OR	END OF DUCT
WxH OR WxH OR	ELBOW FOR RECTANGULAR DUCT
ØD OR	ELBOW FOR ROUND DUCT
W1xH1 W2xH2 OR OR	TRANSITION (RECTANGULAR TO RECTANGULAR)
ØD1 ØD2 OR	TRANSITION (ROUND TO ROUND)
W1xH1 ØD OR OR	TRANSITION (RECTANGULAR TO ROUND)
OR	RECTANGULAR SUPPLY DUCT UP
OR	RECTANGULAR SUPPLY DUCT DOWN
OR	RECTANGULAR RETURN DUCT UP
OR	RECTANGULAR RETURN DUCT DOWN
OR	RECTANGULAR EXHAUST DUCT UP
OR	RECTANGULAR EXHAUST DUCT DOWN
OR	ROUND SUPPLY DUCT UP
OR	ROUND SUPPLY DUCT DOWN
OR	ROUND RETURN DUCT UP
OR	ROUND RETURN DUCT DOWN
OR	ROUND EXHAUST DUCT UP
OR	ROUND EXHAUST DUCT DOWN
XX-##	'XX-##' = THE FAN ASSOCIATED WITH THE DUCT
WcxHc WsxHs OR WbxHb	WYE [NOTE 2]
WbxHb WcxHc WbxHb OR	TEE [NOTE 2]
WcxHc OR WbxHb	RADIUS BRANCH TAP [NOTE 2]
WcxHc OR WbxHb	45° ENTRY BRANCH TAP [NOTE 2]
WcxHc OR ØDb	RECTANGULAR MAIN TO ROUND TAP, ECCENTRIC [NOTE 2]
WcxHc OR ØDb	RECTANGULAR MAIN TO ROUND TAP, CONICAL [NOTE 2]
WcxHc OR ØDb	RECTANGULAR MAIN TO ROUND TAP (SPIN-ON) [NOTE 2]
ØDc OR ØDb	ROUND 45° WYE [NOTE 2]
ØDc OR ØDb	ROUND CONICAL TAP [NOTE 2]
ØDc OR ØDb	ROUND 45° BRANCH TAP [NOTE 2]
ØDc OR ØDb	ROUND TAP (SPIN-ON) [NOTE 2]

EXPLANATORY NOTES:
[1] REFER TO GENERAL NOTES OR DRAWING NOTES FOR INSULATION DETAILS.
[2] BALANCING DAMPERS (BD) ARE NOT SHOWN FOR BREVITY. REFER TO SPECIFICATIONS AND/OR DETAIL DRAWINGS FOR REQUIREMENTS OF BD's.

HHAngus

Project
WLU-Waterloo Campus
Faculty of Education
Wilfrid Laurier University Waterloo Campus
75 University Avenue West
Waterloo, ON N2L 3B5

Prepared For
Wilfrid Laurier University
75 University Avenue West
Waterloo, ON N2L 3C5

HOK, Inc.
480 University Avenue, Suite 1100
Toronto, Ontario M5G 1V2 Canada
t +1 416 203 9993
www.hok.com/studios/toronto

All reproduction & intellectual property rights reserved © 2025

In Association with

HHAngus
Mechanical & Electrical Engineering
1176 Eglinton Avenue East, Suite 800
Toronto, ON M3C 0S1

SPECTECH Technology Consulting and Project Management
Communications Engineering
201-17360 Yonge Street
Newmarket, ON L3Y 7R6

Key Plan

Professional Seals

LICENSED PROFESSIONAL ENGINEER
M. MAROTTA
100541014
2026-10-29
PROVINCE OF ONTARIO

No.	Description	Date
01	ISSUED FOR 100% DD	08/21/2026
02	ISSUED FOR 60% CD	09/17/2026
03	ISSUED FOR 90% CD	10/08/2026
04	ISSUED FOR PERMIT/TENDER	10/29/2026

Project No: 2251005

Sheet Title
MECHANICAL LEGEND AND DRAWING LIST - SHEET 2

Original is 42 x 30. Do not scale contents of this drawing.

Sheet Number
M0-01

GRILLE AND DIFFUSER SCHEDULE

'A' CEILING MOUNTED SUPPLY AIR DIFFUSER
E.H. PRICE 'SPD' OR EQUAL. SQUARE PLAQUE SUPPLY AIR DIFFUSER. WHITE. 24"X24" SURFACE. INLET SIZE AS SHOWN.

'B' LINEAR SUPPLY AIR DIFFUSER
E.H. PRICE 'TBD3' OR EQUAL. 1' SINGLE SLOT LINEAR DIFFUSER C/W ICE TONG PATTERN CONTROLLER AND SUPPLY AIR PLENUM TO MATCH SIZE. FOR INSTALLATION IN CONTINUOUS SLOT OR INDIVIDUAL SECTION; DRYWALL CEILING INSTALLATION.

'C' LOUVERED FACE SUPPLY AIR GRILLE
E.H. PRICE '520' OR EQUAL. STEEL REGISTER WITH 45° STEEL DOUBLE DEFLECTION DAMPERS AND BALANCING DAMPER. FRONT BLADES PARALLEL TO LONG DIMENSION. SIZE AS SHOWN.

'D' CEILING MOUNTED EGGCRATE RETURN AIR GRILLE
E.H. PRICE '80' OR EQUAL. 20"x8" TYP. UNLESS NOTED OTHERWISE ON PLAN.

'E' LOUVERED FACE RETURN GRILLE
E.H. PRICE '530' OR EQUAL. STEEL REGISTER WITH 45° STEEL SINGLE DEFLECTION DAMPERS. BLADES PARALLEL TO LONG DIMENSION. SIZE AS SHOWN.

'F' CEILING MOUNTED SUPPLY AIR DIFFUSER
E.H. PRICE 'RPD' OR EQUAL. ROUND PLAQUE SUPPLY AIR DIFFUSER. WHITE. 6" SIZE.

'G' LINEAR RETURN AIR DIFFUSER
E.H. PRICE 'TBD3' OR EQUAL. 1' SINGLE SLOT LINEAR DIFFUSER AND RETURN AIR PLENUM TO MATCH SIZE. FOR INSTALLATION IN CONTINUOUS SLOT OR INDIVIDUAL SECTION; DRYWALL CEILING INSTALLATION.

PLUMBING FIXTURES

'S-1' SINK
ELKAY 'ELUHAD141855PD' LUSTERTONE SINGLE BOWL UNDERMOUNT ADA SINK WITH PERFECT DRAIN. 16-1/2"x20-1/2"x5-3/8" DEEP. STAINLESS STEEL CONSTRUCTION. ADA COMPLIANT. PROVIDE MANUFACTURER'S MOUNTING HARDWARE, TEMPLATE, BASKET STRAINER, AND ALL ACCESSORIES REQUIRED FOR COMPLETE INSTALLATION.

DELTA TRINSIC '9959TL-DST' TOUCH2O BAR/PREP FAUCET WITH TOUCHLESS TECHNOLOGY. HANDS-FREE ACTIVATION. SINGLE HOLE MOUNT. 1.8 GPM (6.8 L/MIN) MAX FLOW. CHROME FINISH. ADA COMPLIANT. BATTERY POWERED. PROVIDE FLEXIBLE STAINLESS STEEL SUPPLY CONNECTIONS, ANGLE STOPS, ESCUTCHEONS, AND ALL NECESSARY FITTINGS FOR A COMPLETE INSTALLATION.

PROVIDE STAINLESS STEEL BASKET STRAINER, CHROME-PLATED CAST BRASS P-TRAP WITH CLEANOUT, TAILPIECE, ESCUTCHEONS, AND ALL REQUIRED FITTINGS. CONNECT TO SANITARY DRAIN AND VENT SYSTEM. INSTALL IN ACCORDANCE WITH LOCAL PLUMBING CODE REQUIREMENTS AND MANUFACTURER'S RECOMMENDATIONS.

'S-2' CLASSROOM SINK
ELKAY 'ELUHAD281655PD' LUSTERTONE SINGLE BOWL UNDERMOUNT ADA SINK WITH PERFECT DRAIN. 30-1/2"x18-1/2"x5-3/8" DEEP. STAINLESS STEEL CONSTRUCTION. ADA COMPLIANT. PROVIDE MANUFACTURER'S MOUNTING HARDWARE, TEMPLATE, BASKET STRAINER, AND ALL ACCESSORIES REQUIRED FOR COMPLETE INSTALLATION.

DELTA CORDOVA '9085TL-PR-DST' KITCHEN FAUCET WITH TOUCHLESS TECHNOLOGY IN LUMICOAT CHROME FINISH. HANDS-FREE ACTIVATION. SINGLE HOLE MOUNT. 1.8 GPM (6.8 L/MIN) MAX FLOW. ADA COMPLIANT. PROVIDE AC ADAPTER KIT. PROVIDE FLEXIBLE STAINLESS STEEL SUPPLY CONNECTIONS, ANGLE STOPS, ESCUTCHEONS, AND ALL NECESSARY FITTINGS FOR A COMPLETE INSTALLATION.

PROVIDE STAINLESS STEEL BASKET STRAINER, CHROME-PLATED CAST BRASS P-TRAP WITH CLEANOUT, TAILPIECE, ESCUTCHEONS, AND ALL REQUIRED FITTINGS. CONNECT TO SANITARY DRAIN AND VENT SYSTEM. INSTALL IN ACCORDANCE WITH LOCAL PLUMBING CODE REQUIREMENTS AND MANUFACTURER'S RECOMMENDATIONS.

'L-1' LAVATORY
SLOAN BASYS 'AD-81000' AER-DEC 1 WALL-MOUNT STATION SINK. CAESARSTONE QUARTZ. 30"x34"x23"D. ADA COMPLIANT. PROVIDE MANUFACTURER'S MOUNTING HARDWARE, CARRIER, TEMPLATE, STRAINER, AND ALL ACCESSORIES REQUIRED FOR COMPLETE INSTALLATION.

SLOAN BASYS 'EFX-200' HARDWIRED-POWERED DECK-MOUNTED MID BODY FAUCET. INFRARED SENSOR ACTIVATION. 0.5 GPM. POLISHED CHROME FINISH. ADA COMPLIANT. PROVIDE FLEXIBLE STAINLESS STEEL SUPPLY CONNECTIONS, ANGLE STOPS, ESCUTCHEONS, AND ALL NECESSARY FITTINGS FOR A COMPLETE INSTALLATION.

'WC-1' WATER CLOSET
AMERICAN STANDARD AFWALL MILLENIUM TOP SPUD ELONGATED WALL-HUNG EVERCLEAN BOWL. WHITE FINISH. 1.1-1.6 GPF (4.2-6.0 LPF). SIPHON JET FLUSH. COMPLETE WITH HEAVY DUTY OPEN FRONT SEAT LESS COVER AND SELECTRONIC TOUCHLESS FLUSH VALVE IN POLISHED CHROME. PROVIDE MANUFACTURER'S MOUNTING HARDWARE, CARRIER, TEMPLATE, SUPPLY CONNECTIONS, ANGLE STOPS, ESCUTCHEONS, AND ALL NECESSARY FITTINGS AND ALL ACCESSORIES REQUIRED FOR COMPLETE INSTALLATION.

'BF-1' BOTTLE FILLER
ELKAY 'LZSDWSLK' ON-WALL BOTTLE FILLING STATION WITH MOUNTING FRAME. FILTERED, NON-REFRIGERATED. HANDS FREE SENSOR ACTIVATION. LAMINAR FLOW. ADA COMPLIANT. UL 399 AND CAN/CSA C22.2 NO. 120 CERTIFIED. 115V/1/60. 1 FLA.

FAN

REFERENCE	BASIS OF DESIGN		STYLE	PERFORMANCE			VIBRATION CONTROL			MOTOR					REMARKS
TAG	MAKE	MODEL	DRIVE TYPE	AIRFLOW RATE	EXTERNAL STATIC PRESSURE	FAN SPEED	BASE TYPE	ISOLATION TYPE	MINIMUM STATIC DEFLECTION	VOLTAGE	OPERATING POWER	MCA	SPEED CONTROL	MOTOR REMARKS	
				cfm	inwg	RPM			in	V/PH/Hz	HP	A			
EF-1	GREENHECK	CSP-A410	DIRECT	361	0.25	1000	N/A	SPRING HANGER	1/2	115/1/60	0.06	2.1	ECM	N/A	

SUPPLY AIR TERMINAL UNITS

REFERENCE	CONSTRUCTION					AIR PERFORMANCE		REHEAT AIR PERFORMANCE			HYDRONIC REHEAT				BASIS OF DESIGN		CONTROL SEQUENCE REFERENCE	REMARKS
VAV TYPE REFERENCE	REHEAT TYPE	ATTENUATOR TYPE	INLET CONNECTION DIAMETER	OUTLET WIDTH	OUTLET HEIGHT	MAX AIRFLOW	STATIC PRESSURE DROP AT DESIGN AIRFLOW WITH DAMPER OPEN	REHEAT AIRFLOW	ENTERING AIR TEMP.	LEAVING AIR TEMP.	LIQUID TYPE	MAXIMUM LIQUID FLOW	LIQUID PRESSURE DROP	ENTERING LIQUID TEMP.	MANUFACTURER	MODEL		
			in	in	in	cfm	inwg	cfm	F	F		gpm	ft hd	F				
6H	HYDRONIC	3 FT	6	12	8	400	0.25	200	55.0	85	WATER	0.7	0.3	180	PRICE	SDV	CS101	1, 2, 3
6	NO REHEAT	3 FT	6	12	8	450	0.01	--	--	--	--	--	--	--	PRICE	SDV	CS100	1, 2
8	NO REHEAT	3 FT	8	12	10	900	0.01	--	--	--	--	--	--	--	PRICE	SDV	CS100	1, 2
10	NO REHEAT	3 FT	10	14	13	1,400	0.01	--	--	--	--	--	--	--	PRICE	SDV	CS100	1, 2

REMARKS KEY
[1] PRESSURE INDEPENDENT TYPE
[2] ACCESS PANEL FOR DAMPER
[3] REHEAT COIL TO BE SHIPPED LOOSE TO ALLOW INSTALLING CONTRACTOR TO MOUNT AT DISCHARGE END OF ATTENUATOR

CONTROL POINT LEGEND

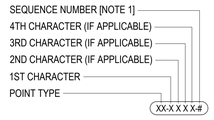

EXPLANATORY NOTES:
[1] A SEQUENTIAL POINT NUMBER IS ADDED TO THE END OF AN ABBREVIATION IF THERE IS MORE THAN ONE INSTANCE OF THE SAME TYPE OF INSTRUMENT OR DEVICE ON THE SAME SCHEMATIC.

POINT TYPE

AI	ANALOG INPUT
AO	ANALOG OUTPUT
DI	DISCRETE INPUT
DO	DISCRETE OUTPUT
SC	SERIAL COMMUNICATION

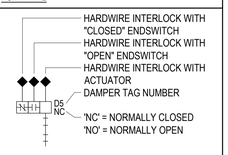

POINT ABBREVIATION

LETTER	1st CHARACTER (FUNCTION)	2nd CHARACTER (MODIFIER)	3rd CHARACTER (MODIFIER)	4th CHARACTER (MODIFIER)
A	GAS ANALYSIS		ALARM	ALARM
C	MANUAL CONTROL	CLOSE	CLOSE	
D	DAMPER	DIFFERENTIAL		
E	EQUIPMENT (GENERAL)			
F	FLOW			
H	HUMIDITY	HIGH	HIGH	
I	CURRENT, VOLT, OR kW			
L	LEVEL	LOW	LOW	
O		OPEN	OPEN	
M	MISCELLANEOUS			
P	PRESSURE			
R	RATE, CAPACITY, OUTPUT	RESET	REVERSE	
S	SPEED, FREQUENCY	START/STOP		
T	TEMPERATURE	STATUS		
V	VALVE			
X	PILOT LIGHT	TRANSMITTER		
Z		POSITION		

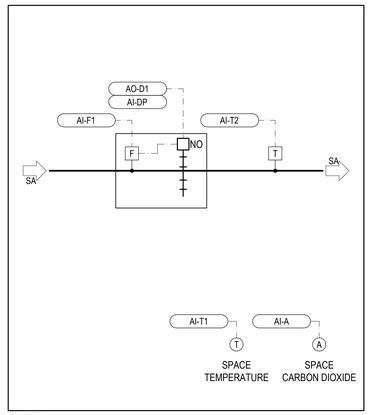

1 M1-00 CS100: VAV ATU
N.T.S.

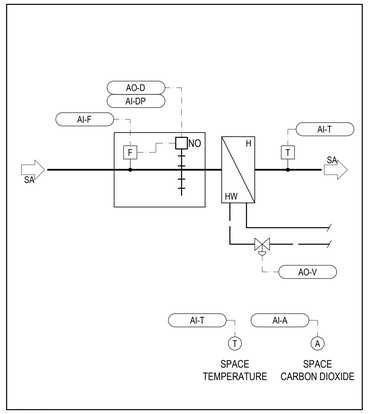

2 M1-00 CS101: VAV ATU + REHEAT
N.T.S.

HHAngus

Project
WLU-Waterloo Campus
Faculty of Education
Wilfrid Laurier University Waterloo Campus
75 University Avenue West
Waterloo, ON N2L 3B5

Prepared For
Wilfrid Laurier University
75 University Avenue West
Waterloo, ON N2L 3C5

HOK, Inc.
480 University Avenue, Suite 1100
Toronto, Ontario M5G 1V2 Canada
t +1 416 203 9993
www.hok.com/studios/toronto

All reproduction & intellectual property rights reserved © 2025

In Association with

HHAngus
Mechanical & Electrical Engineering
1176 Eglinton Avenue East, Suite 800
Toronto, ON M3C 0S1

SPECTECH Technology Consulting and Project Management
Communications Engineering
201-17360 Yonge Street
Newmarket, ON L3Y 7R6

Key Plan

Professional Seals



No.	Description	Date
01	ISSUED FOR 100% DD	08/21/2026
02	ISSUED FOR 60% CD	09/17/2026
03	ISSUED FOR 90% CD	10/08/2026
04	ISSUED FOR PERMIT/TENDER	10/29/2026

Project No: 2251005
Sheet Title
EQUIPMENT SCHEDULES

Original is 42 x 30. Do not scale contents of this drawing.
Sheet Number
M1-00

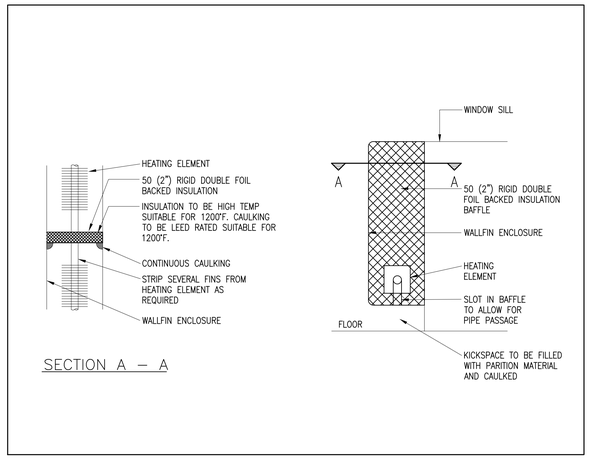

07 M1-00 TYPICAL RADIATION ENCLOSURE SOUND BAFFLE DETAIL

N.T.S.

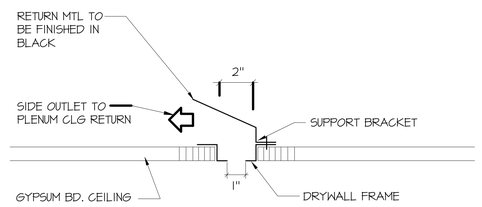

04 M1-00 TYPICAL DETAIL OF SLOT RETURN

N.T.S.

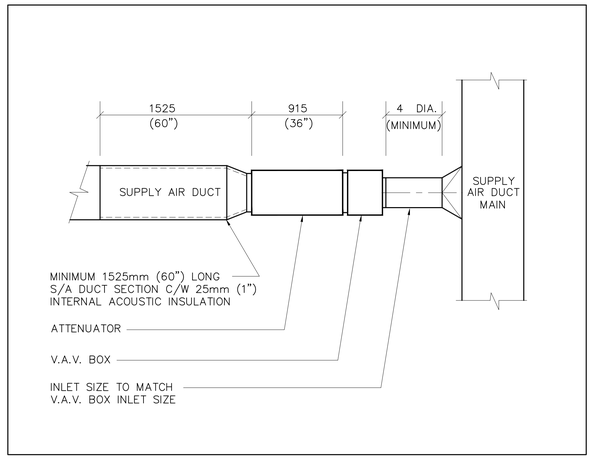

01 M1-00 TYPICAL DETAIL OF V.A.V. BOX WITH ATTENUATOR

N.T.S.

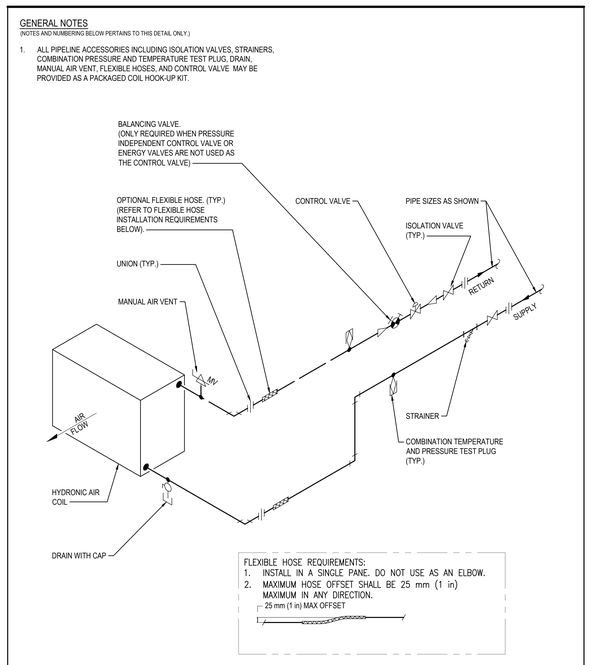

08 M1-00 DUCT MOUNTED REHEAT COIL PIPING DETAIL

N.T.S.

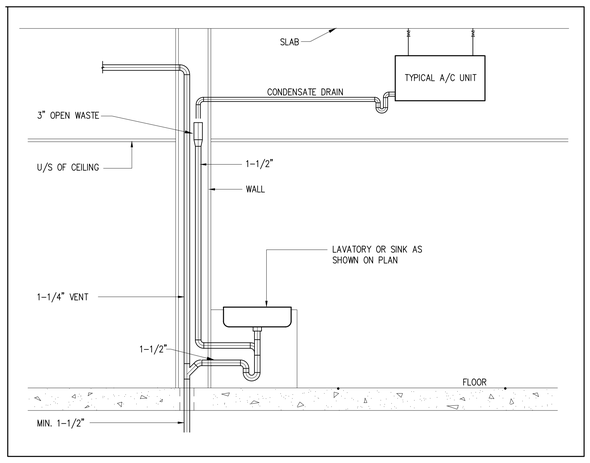

05 M1-00 TYPICAL DETAIL OF CONDENSATE DRAIN TO SINK

N.T.S.

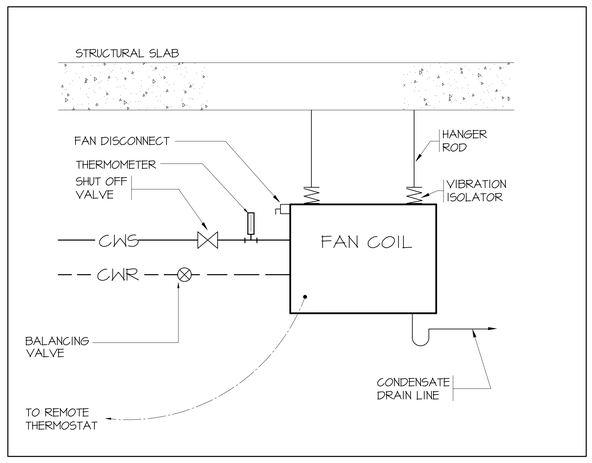

02 M1-00 TYPICAL AC UNIT DETAIL

N.T.S.

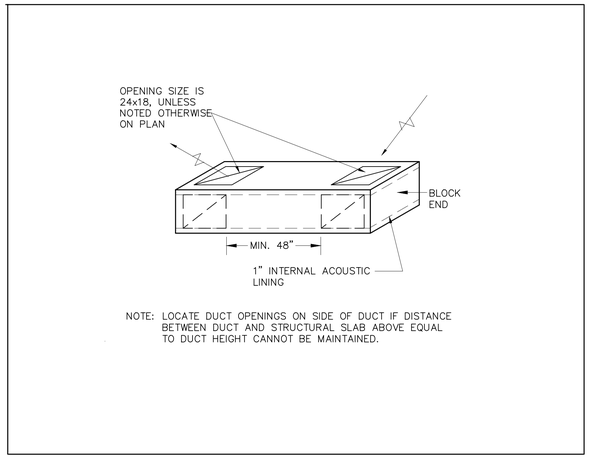

06 M1-00 TYPICAL TRANSFER AIR DUCT DETAIL

N.T.S.

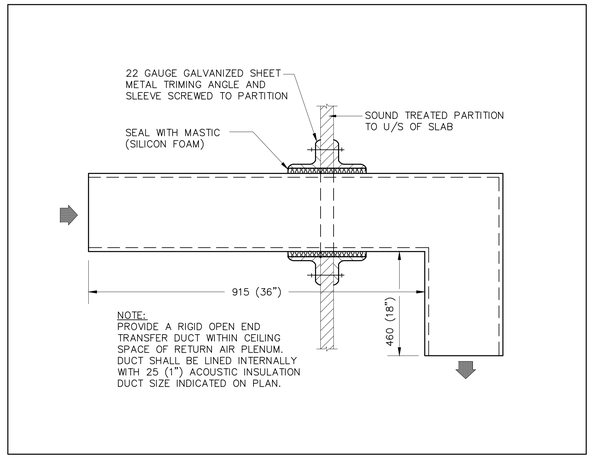

03 M1-00 TYPICAL TRANSFER DUCT DETAIL (PLAN VIEW)

N.T.S.

HHAngus

Project
WLU-Waterloo Campus
Faculty of Education
Wilfrid Laurier University Waterloo Campus
75 University Avenue West
Waterloo, ON N2L 3B5

Prepared For
Wilfrid Laurier University
75 University Avenue West
Waterloo, ON N2L 3C5

HOK, Inc.
480 University Avenue, Suite 1100
Toronto, Ontario M5G 1V2 Canada
t +1 416 203 9993
www.hok.com/studios/toronto

All reproduction & intellectual property rights reserved © 2025

In Association with

HHAngus
Mechanical & Electrical Engineering
1176 Eglinton Avenue East, Suite 800
Toronto, ON M3C 0S1

SPECTECH Technology Consulting and Project Management
Communications Engineering
201-17360 Yonge Street
Newmarket, ON L3Y 7R6

Key Plan

Professional Seals

LICENSED PROFESSIONAL ENGINEER
M. MAROTTA
100541014
2026-10-29
PROVINCE OF ONTARIO

No.	Description	Date
01	ISSUED FOR 100% DD	08/21/2026
02	ISSUED FOR 60% CD	09/17/2026
03	ISSUED FOR 90% CD	10/08/2026
04	ISSUED FOR PERMIT/TENDER	10/29/2026

Project No: 2251005

Sheet Title

MECHANICAL DETAILS

Original is 42 x 30. Do not scale contents of this drawing.

Sheet Number

M1-01

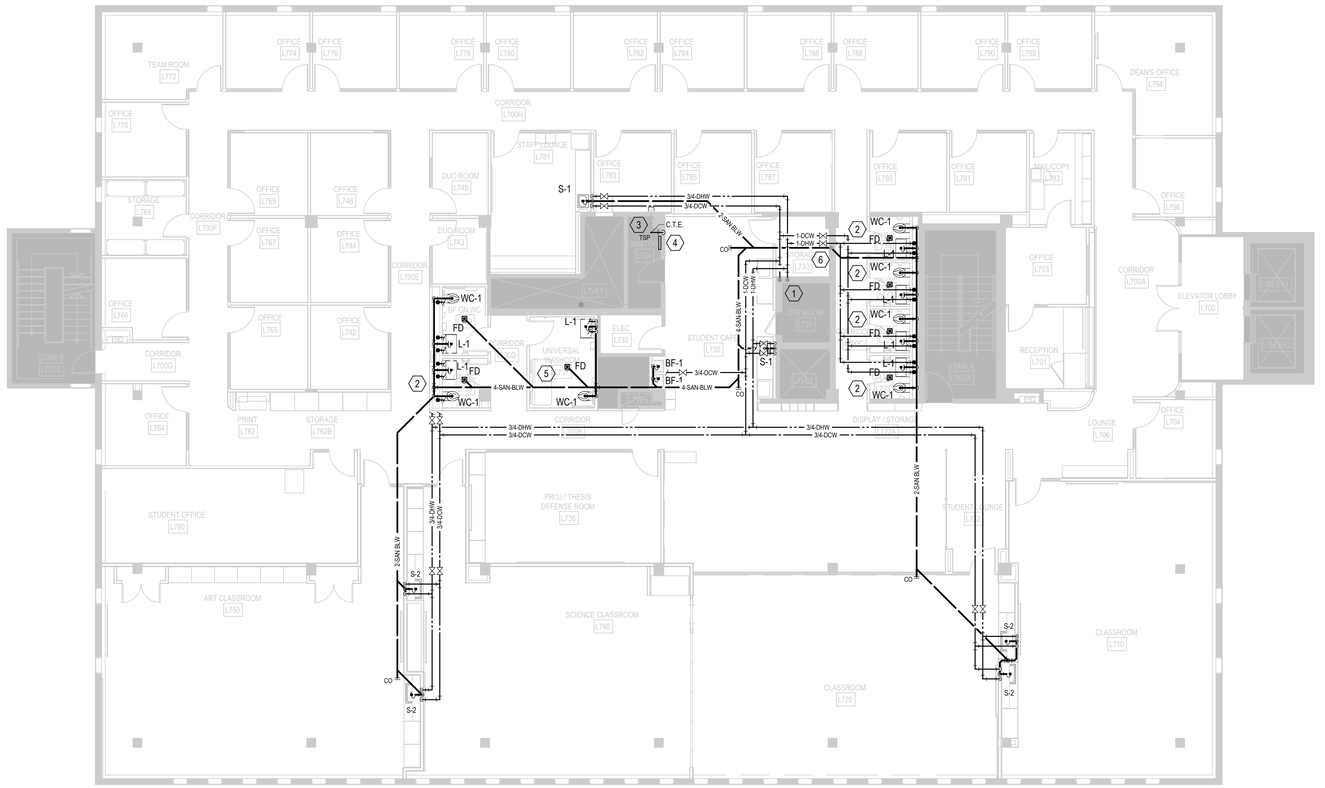

GENERAL NOTES

(NOTES AND NUMBERING BELOW PERTAINS TO THIS DRAWING ONLY.)

1. LOCATIONS OF MAIN PLUMBING AND DRAINAGE SERVICE RISERS TO BE CONFIRMED THROUGH ON-SITE INSPECTION
2. MAIN WASHROOM PLUMBING RISERS TO BE RELOCATED AS INDICATED IN PREPARATION FOR FUTURE WASHROOM STACKING SCOPE

REFERENCE NOTES

(NOTES AND NUMBERING BELOW PERTAINS TO THIS DRAWING ONLY.)

1. CONNECT NEW DCW AND DHW LINES TO THE EXISTING RISERS.
2. PROVIDE DHW, DCW, DRAINAGE AND VENT CONNECTIONS FOR NEW WASHROOM PLUMBING FIXTURES. PROVIDE ACCESS PANEL IN WALL FOR CLEANOUT AND MAINTENANCE. (TYP.)
3. CUT AND CAP EXISTING HARD WATER SUPPLY TO PREVIOUS SHARED WASHROOMS.
4. PROVIDE NEW TRAP SEAL PRIMER. EXTEND PRIMER LINE TO ALL FLOOR DRAINS ON FLOOR.
5. PROVIDE NEW FLOOR DRAIN. REFER TO ARCHITECTURAL DRAWINGS FOR EXACT LOCATIONS. (TYP.)
6. CONNECT TO EXISTING SANITARY RISER ON FLOOR BELOW.

HHAngus

Project
WLU-Waterloo Campus
Faculty of Education
Wilfrid Laurier University Waterloo Campus
75 University Avenue West
Waterloo, ON N2L 3B5

Prepared For
Wilfrid Laurier University
75 University Avenue West
Waterloo, ON N2L 3C5

HOK, Inc.
480 University Avenue, Suite 1100
Toronto, Ontario M5G 1V2 Canada
t +1 416 203 9993
www.hok.com/studios/toronto

All reproduction & intellectual property rights reserved © 2025

In Association with

HHAngus
Mechanical & Electrical Engineering
1176 Eglinton Avenue East, Suite 800
Toronto, ON M3C 0S1

SPECTECH Technology Consulting and Project Management
Communications Engineering
201-17360 Yonge Street
Newmarket, ON L3Y 7R6

Key Plan

Professional Seals

LICENSED PROFESSIONAL ENGINEER
M. MAROTTA
100541014
2026-10-29
PROVINCE OF ONTARIO

No.	Description	Date
01	ISSUED FOR 100% DD	08/21/2026
02	ISSUED FOR 60% CD	09/17/2026
03	ISSUED FOR 90% CD	10/08/2026
04	ISSUED FOR PERMIT/TENDER	10/29/2026

Project No: 2251005

Sheet Title

LEVEL 7 NEW FLOOR PLAN - PLUMBING

Original is 42 x 30. Do not scale contents of this drawing.

Sheet Number

M2-00



GENERAL NOTES

(NOTES AND NUMBERING BELOW PERTAINS TO THIS DRAWING ONLY.)

1. EXISTING FIRE HOSE CABINET C/W 75FT HOSE AND FIRE EXTINGUISHER TO REMAIN.
2. EXISTING FIRE HOSE CABINET C/W 75FT HOSE AND FIRE EXTINGUISHER TO BE RELOCATED TO NEW LOCATION AS SHOWN.
3. EXISTING FIRE PIPING TO BE ADJUSTED BASED ON RELOCATED FIRE HOSE CABINETS.

HHAngus

Project
WLU-Waterloo Campus
Faculty of Education
Wilfrid Laurier University Waterloo Campus
75 University Avenue West
Waterloo, ON N2L 3B5

Prepared For
Wilfrid Laurier University
75 University Avenue West
Waterloo, ON N2L 3C5

HOK, Inc.
480 University Avenue, Suite 1100
Toronto, Ontario M5G 1V2 Canada
t +1 416 203 9993
www.hok.com/studios/toronto

All reproduction & intellectual property rights reserved © 2025

In Association with

HHAngus
Mechanical & Electrical Engineering
1176 Eglinton Avenue East, Suite 800
Toronto, ON M3C 0S1

SPECTECH Technology Consulting and Project Management
Communications Engineering
201-17360 Yonge Street
Newmarket, ON L3Y 7R6

Key Plan

Professional Seals



No.	Description	Date
01	ISSUED FOR 100% DD	08/21/2026
02	ISSUED FOR 60% CD	09/17/2026
03	ISSUED FOR 90% CD	10/08/2026
04	ISSUED FOR PERMIT/TENDER	10/29/2026

Project No: 2251005

Sheet Title

LEVEL 7 NEW FLOOR PLAN - FIRE PROTECTION

Original is 42 x 30. Do not scale contents of this drawing.

Sheet Number

M3-00

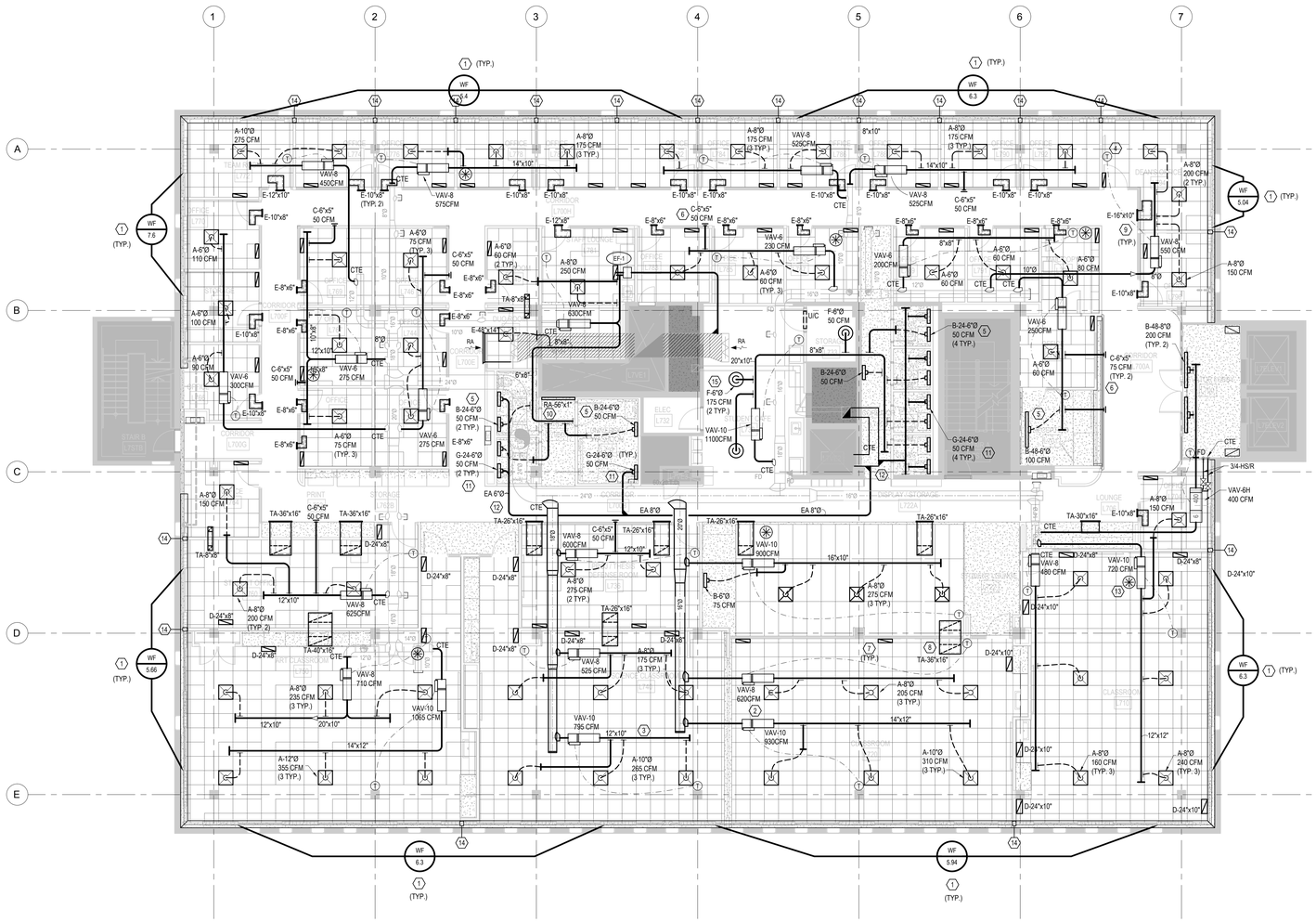
1
2
3
4
5
6
7
A
B
C
D
E
(1) (TYP.)
WF 9.4
WF 6.3
WF 5.04
WF 7.6
WF 5.66
WF 5.94
(14)
A-10"Ø 275 CFM
A-8"Ø 175 CFM (3 TYP.)
A-8"Ø 175 CFM (3 TYP.)
VAV-8 525CFM
8"x10"
A-8"Ø 175 CFM (3 TYP.)
VAV-8 450CFM
E-10"x8"
E-12"x10"
E-10"x8" (TYP. 2)
CTE
VAV-8 575CFM
14"x10"
E-10"x8"
E-10"x8"
E-10"x8"
E-10"x8"
E-10"x8"
VAV-8 525CFM
C-6"x5" 50 CFM
E-10"x8"
E-10"x8"
A-8"Ø 200 CFM (2 TYP.)
16"x10"
E-16"x10"
(2)
A-8"Ø 150 CFM
A-6"Ø 110 CFM
C-6"x5" 50 CFM
A-6"Ø 75 CFM (TYP. 3)
C-6"x5" 50 CFM
A-6"Ø 50 CFM (2 TYP.)
A-8"Ø 250 CFM
EF-1
E-12"x8"
E-8"x6"
C-6"x5" 50 CFM
E-8"x6"
VAV-6 230 CFM
E-8"x6"
E-8"x6"
E-8"x6"
E-8"x6"
A-6"Ø 60 CFM
A-6"Ø 60 CFM
A-6"Ø 80 CFM
VAV-6 550 CFM
A-8"Ø 150 CFM
A-8"Ø 100 CFM
E-8"x6"
E-10"x8"
E-10"x8"
E-8"x6"
E-8"x6"
E-8"x6

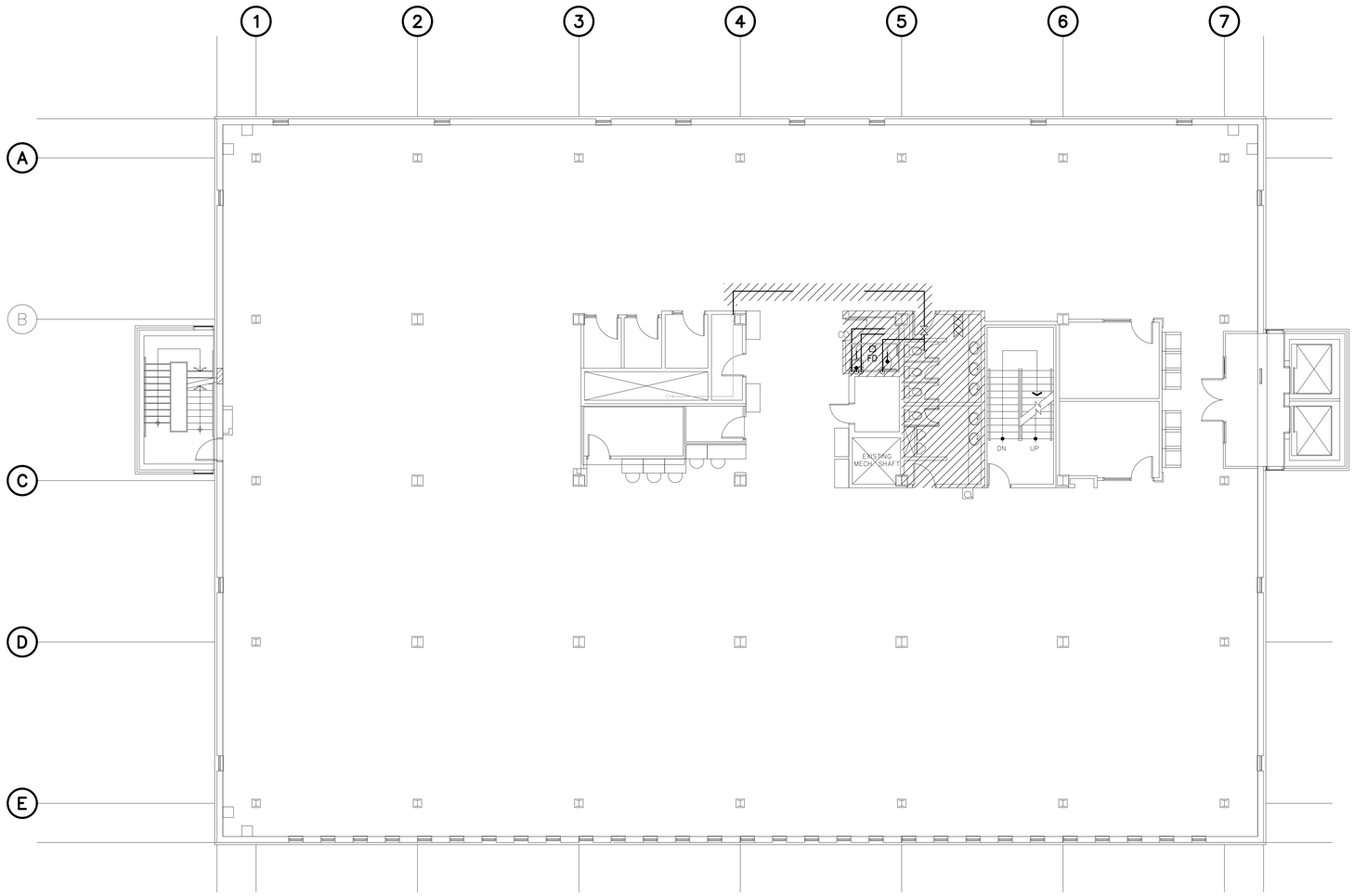

GENERAL NOTES

(NOTES AND NUMBERING BELOW PERTAINS TO THIS DRAWING ONLY.)

1. EXISTING WASHROOM PLUMBING TO BE CUT AND CAPPED IN CEILING SPACE.
2. ALL VALVES AND PIPING EQUIPMENT AND ACCESSORIES SERVING THE EXISTING WASHROOMS TO BE DEMOLISHED.
3. EXISTING DRAINAGE FROM FIXTURES TO BE DEMOLISHED UP TO POINT OF CONNECTION TO MAIN HORIZONTAL PIPE ON FLOOR BELOW. BRANCH TO BE CAPPED.

HHAngus

Project
WLU-Waterloo Campus
Faculty of Education
Wilfrid Laurier University Waterloo Campus
75 University Avenue West
Waterloo, ON N2L 3B5

Prepared For
Wilfrid Laurier University
75 University Avenue West
Waterloo, ON N2L 3C5

HOK, Inc.
480 University Avenue, Suite 1100
Toronto, Ontario M5G 1V2 Canada
t +1 416 203 9993
www.hok.com/studios/toronto

All reproduction & intellectual property rights reserved © 2025

In Association with

HHAngus
Mechanical & Electrical Engineering
1176 Eglinton Avenue East, Suite 800
Toronto, ON M3C 0S1

SPECTECH Technology Consulting and Project Management
Communications Engineering
201-17360 Yonge Street
Newmarket, ON L3Y 7R6

Key Plan

Professional Seals



No.	Description	Date
01	ISSUED FOR 100% DD	08/21/2026
02	ISSUED FOR 60% CD	09/17/2026
03	ISSUED FOR 90% CD	10/08/2026
04	ISSUED FOR PERMIT/TENDER	10/29/2026

Project No: 2251005

Sheet Title

LEVEL 7 DEMOLITION PLAN - PLUMBING

Original is 42 x 30. Do not scale contents of this drawing.

Sheet Number

M9-01

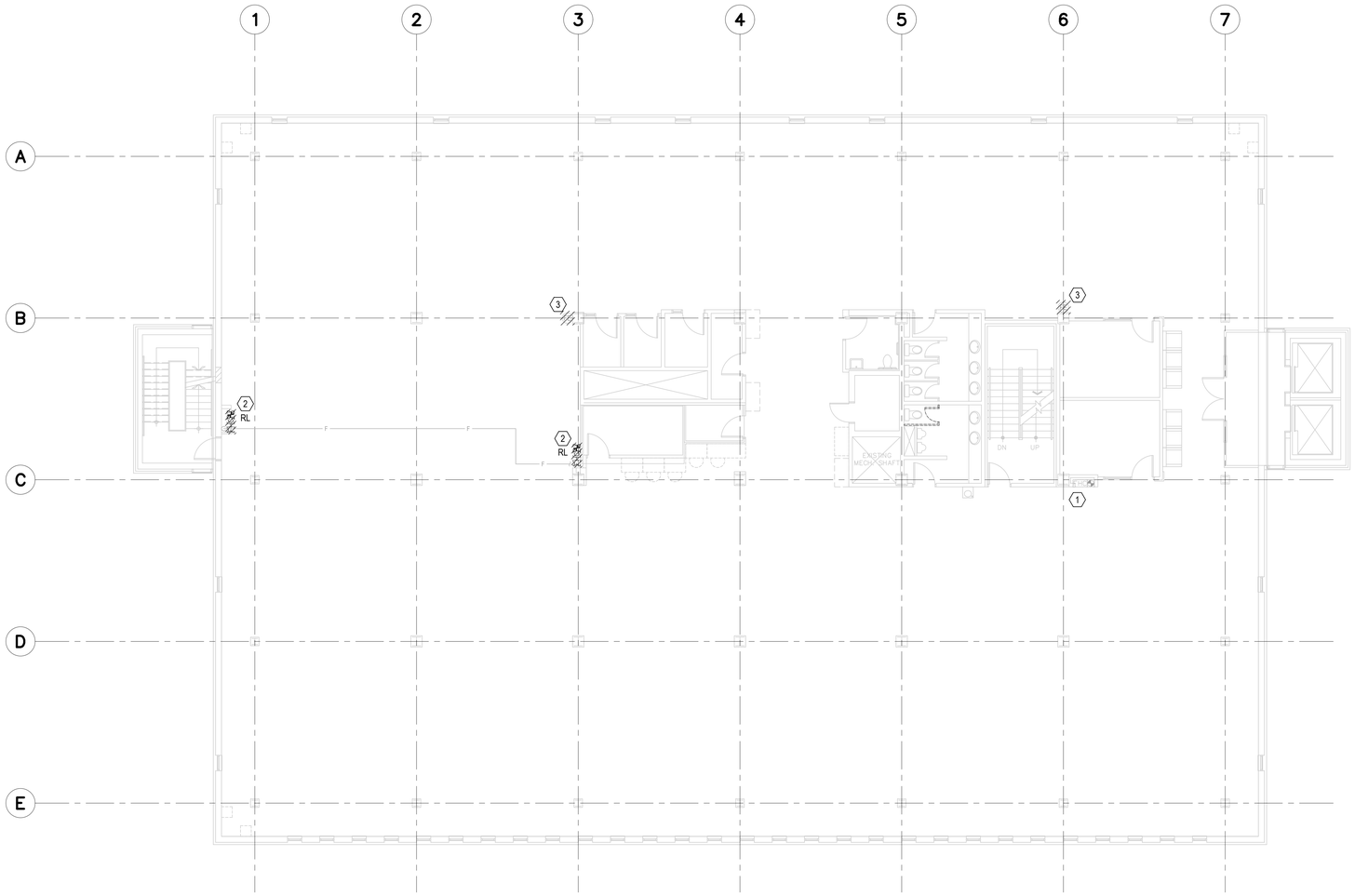

GENERAL NOTES

(NOTES AND NUMBERING BELOW PERTAINS TO THIS DRAWING ONLY.)

1. ALL FIRE HOSE CABINETS TO HAVE 100' HOSE TO ENSURE ADEQUATE COVERAGE THROUGHOUT NEW FLOOR PLAN.

REFERENCE NOTES

(NOTES AND NUMBERING BELOW PERTAINS TO THIS DRAWING ONLY.)

1. EXISTING FIRE HOSE CABINET C/W 75 FT HOSE AND FIRE EXTINGUISHER TO REMAIN.
2. FIRE HOSE CABINET AND ASSOCIATED STANDPIPE TO BE RELOCATED.
3. EXISTING FIRE EXTINGUISHER TO BE REMOVED.

HHAngus

Project
WLU-Waterloo Campus
Faculty of Education
Wilfrid Laurier University Waterloo Campus
75 University Avenue West
Waterloo, ON N2L 3B5

Prepared For
Wilfrid Laurier University
75 University Avenue West
Waterloo, ON N2L 3C5

HOK, Inc.
480 University Avenue, Suite 1100
Toronto, Ontario M5G 1V2 Canada
t +1 416 203 9993
www.hok.com/studios/toronto

All reproduction & intellectual property rights reserved © 2025

In Association with

HHAngus
Mechanical & Electrical Engineering
1176 Eglinton Avenue East, Suite 800
Toronto, ON M3C 0S1

SPECTECH Technology Consulting and Project Management
Communications Engineering
201-17360 Yonge Street
Newmarket, ON L3Y 7R6

Key Plan

Professional Seals



No.	Description	Date
01	ISSUED FOR 100% DD	08/21/2026
02	ISSUED FOR 60% CD	09/17/2026
03	ISSUED FOR 90% CD	10/08/2026
04	ISSUED FOR PERMIT/TENDER	10/29/2026

Project No: 2251005

Sheet Title

LEVEL 7 DEMOLITION PLAN - FIRE PROTECTION

Original is 42 x 30. Do not scale contents of this drawing.

Sheet Number

M9-02

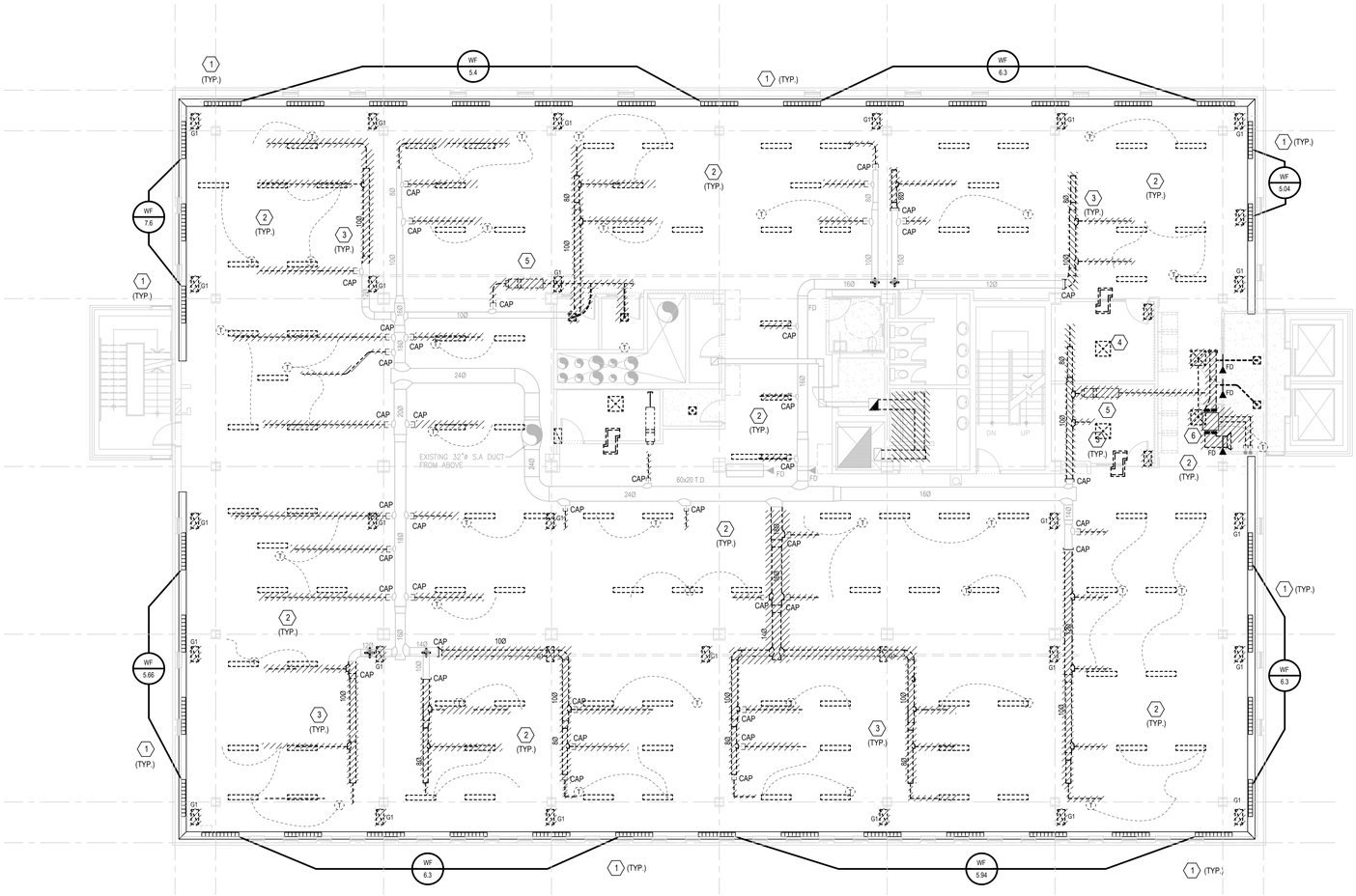

GENERAL NOTES

(NOTES AND NUMBERING BELOW PERTAINS TO THIS DRAWING ONLY.)

1. REMOVE ALL EXISTING BRANCH DUCTWORK, DIFFUSERS, GRILLES, VAVS, AND ACCESSORIES SUITED TO THE PREVIOUS FLOOR PLAN.

REFERENCE NOTES

(NOTES AND NUMBERING BELOW PERTAINS TO THIS DRAWING ONLY.)

1. EXISTING WALLFIN TO REMAIN. REMOVE EXISTING CONTROL VALVE AND THERMOSTAT. ENGAGE BASE-BUILDING CONTROLS CONTRACTOR FOR REPLACEMENT AND BAS INTEGRATION. (TYP.)

   SIEMENS REPRESENTATIVE:
   JAKE RENDULIC
   E: JAKE.RENDULIC@SIEMENS.COM
   T: 905-541-7433

2. REMOVE ALL EXISTING S.A. DIFFUSERS AND R.A. GRILLES. (TYP.)
3. REMOVE PARTIAL S.A. DUCTWORK AND CAP AS SHOWN ON DRAWING. (TYP.)
4. REMOVE ALL EXISTING TRANSFER AIR DUCTS. (TYP.)
5. REMOVE EXISTING VAV BOX, ASSOCIATED DUCTWORK AND THERMOSTAT. (TYP.)
6. REMOVE EXISTING CABINET UNIT HEATER. CUT HYDRONIC PIPING BACK TO RISER AND CAP.

HHAngus

Project
WLU-Waterloo Campus
Faculty of Education
Wilfrid Laurier University Waterloo Campus
75 University Avenue West
Waterloo, ON N2L 3B5

Prepared For
Wilfrid Laurier University
75 University Avenue West
Waterloo, ON N2L 3C5

HOK, Inc.
480 University Avenue, Suite 1100
Toronto, Ontario M5G 1V2 Canada
t +1 416 203 9993
www.hok.com/studios/toronto

All reproduction & intellectual property rights reserved © 2025

In Association with

HHAngus
Mechanical & Electrical Engineering
1176 Eglinton Avenue East, Suite 800
Toronto, ON M3C 0S1

SPECTECH Technology Consulting and Project Management
Communications Engineering
201-17360 Yonge Street
Newmarket, ON L3Y 7R6

Key Plan

Professional Seals

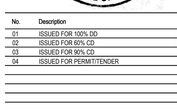

No.	Description	Date
01	ISSUED FOR 100% DD	08/21/2026
02	ISSUED FOR 60% CD	09/17/2026
03	ISSUED FOR 90% CD	10/08/2026
04	ISSUED FOR PERMIT/TENDER	10/29/2026

Project No: 2251005

Sheet Title

LEVEL 7 DEMOLITION PLAN - HVAC

Original is 42 x 30. Do not scale contents of this drawing.

Sheet Number

M9-03