.2 90 mm (3½ in) dial type, , dual kPa/psi scale readings,

.3 suitable for air and water.

Standard of Acceptance

° Winters - fig. PFE series
° Ashcroft

.2 Supervisory switches:

.1 listed to ULC-S548 and FM approved for fire service,

.2 mechanically secured, with N.O. and N.C. contacts and supervisory capability,

Standard of Acceptance

° Potter Electric - fig. OSYSU - for OS&Y gate valves
° Potter Electric - fig. PCVS – for post indicating valves and butterfly valves
° Potter Electric - fig. RBCS - for ball valves.

.3 Pressure switches on alarm check valves:

.1 listed to ULC-S548 and FM approved for fire service,

.2 for loss of normal water pressure on wet sprinkler system,

.3 for monitoring of low water pressure on wet sprinkler system with excess pressure pump.

Standard of Acceptance

° Potter Electric - fig. PS100-21: for detecting water flow alarm condition
° Potter Electric - fig. PS120A: for monitoring low water pressure

.4 Flow switches:

.1 listed to ULC-S548 and FM approved for fire service,

.2 vane-type flow switch, for mounting in sprinkler zone piping.

.3 fitted with;

(a) sealed retard,

(b) visual indication of switch activation,

(c) mechanical delay adjustment

Standard of Acceptance

° Grinnell - fig. F-620
° Potter Electric - fig. VSR
° System Sensor - fig. WFD

2.9 Dielectric Fittings

.1 Dielectric unions – NPS 2 and under:

.1 body and union nut material selected to suit connecting piping materials, including carbon steel/copper, carbon steel/stainless steel, and copper/stainless steel,

.2 flat-face union design,

.3 tail-piece with FNPT ends with thermobaked epoxy coating, and Teflon shoulder gasket,

.4 head-piece with integral O-ring, with threaded or soldered pipe ends.

.5 union nut,

.6 pressure rating: Class 3000.

.7 dielectric coating resistance rating: minimum 500 V/mil thickness.

Standard of Acceptance

° Hart Industrial Unions - fig. D-3136

.2 Dielectric insulating flanges – NPS 2-1/2 to NPS 4:

.1 for connecting copper to carbon steel piping.

.2 ductile iron flanges, Class 125 to ANSI B16.42.

.3 copper tailpiece for soldered joint,

.4 FNPT thread to AMSE B1.20.1 x copper solder joint,

.5 BUNA-N gasket,

.6 maximum design pressure: 1200 kPa (175 psi)

.7 maximum operating temperature: 82°C (180°F)

Standard of Acceptance

° Watts No. LF3100

.3 Dielectric insulated flange – single face with copper tube tailpiece – NPS 2-1/2 to NPS 4;

.1 for connecting copper to carbon steel piping.

.2 Van Stone style carbon steel flange with copper tailpiece with flared end,

.3 carbon steel flange, Class 150 to ANSI B16.5, with powder coated finish.

.4 copper tailpiece with rolled flange face-end, and EPDM insulting gasket isolating the copper tube from the steel flange.

Standard of Acceptance

° CTS Flange Canada - fig. CTS Copper Flange Adaptor

3 EXECUTION

3.1 Commencement Point of Fire Suppression Water Service

.1 [Commence work under this Division at the pipe flange provided under Division 22 that is located downstream of the municipal water meter assembly;

.1 provide service isolation valve at this location and the backflow protection device as shown.

3.2 Piping Installation General Requirements

.1 General layout of mains, risers, run-outs and connection details of piping systems are shown.

.2 Install concealed pipes close to building structure to keep furring spaces to minimum and minimize obstruction to other services in ceiling spaces.

.3 Run exposed piping parallel to walls and conserve headroom and space, except where specific installation details are shown.

.4 Support piping in accordance with the requirements of the NFPA standard applicable to the system type, subject to and in accordance with the requirements of specification section 20 05 29.

.5 Ream pipe after cutting to length and clean off scale and dirt inside and outside of pipe before threading, grooving or welding.

.6 Provide bends, expansion loops, hoses or joints to compensate for pipe seismic movement.

.7 Anchor, guide and laterally support vertical and horizontal piping to support filled weight and absorb thrust under operating conditions.

.8 Erect piping so that gravity forces and thrust from changes in direction do not stress connections to apparatus.

.9 Provide di-electric couplings or flanges where steel pipe connects to copper tube.

.10 Install drain valves at low points in water piping systems and in valved run-outs from risers so that system or isolated parts of system can be drained.

.11 Do not use galvanized materials in contact with glycols.

.12 Personnel involved in installation of grooved joint piping and fittings to be trained by product manufacturer and be conversant with;

.1 pipe end preparation and special tools,

(a) pipe ends to be clean and free from indentations, projections and roll marks in area from pipe end to groove.

(b) dimensions to be according to standard cut groove or roll groove in accordance with CSA

.2 coupling and fitting selection.

.3 joint assembly to accommodate expansion, contraction, and flexibility,

.4 specifications and/or recommendations with respect to support, anchorage and guiding of pipe systems.

3.3 Pipe Joints

.1 Refer to applicable fire suppression system specification sections for permissible type of pipe joints to be used and any restrictions therein.

.2 Use flat-faced steel flanges when attaching to cast iron flanges.

3.4 Dielectric Fittings

.1 Provide dielectric fittings where copper tubing is connected to carbon steel or galvanized steel pipe.

.2 Dielectric fittings are not required to separate carbon steel or galvanized steel pipe from:

.1 brass or bronze valves provided that carbon steel pipe or galvanized steel pipe is connected to both sides of the valve, or

.2 hose valves.

.3 Bronze or brass valves are not to be used as dielectric fittings. Where a brass or bronze valve is installed at the connection point between carbon steel/galvanized steel pipe and copper tube systems, provide a dielectric fitting on either side of the valve.

3.5 Manual Service Valves

.1 Provide service valves in accordance with specification section 21 05 23[.][except as required in specification section 22 05 19 for valves associated with the municipal water meter dedicated for fire suppression systems.]

3.6 Backflow Protection

.1 Provide a premises backflow prevention in accordance with the requirements of the applicable building code or plumbing code and as specified in other sections of Division 21.

.2 Provide reduced pressure principle backflow preventers to isolate the portion of the fire protection system where the municipal water is modified by the addition of chemicals including anti-freeze chemicals.

.3 Install backflow preventers in accordance with CSA B64.10.

.4 Provide drain piping for intermediate drain fittings on reduced pressure backflow preventers and run drain to nearest floor drain. Size drain piping in accordance with the following table unless valve manufacturer recommends larger size drains.

Reduced pressure backflow preventer Size NPS	Minimum Drain Size NPS
NPS 2 and smaller	2
NPS 4, 6	3
NPS 8 and larger	4

3.7 Welding Procedures

.1 Welding of fire suppression piping to be in accordance with specification section 20 05 24 except as otherwise required by the NFPA standard applicable to the type of fire suppression system.

.2 Welding acceptance criteria to be in accordance with the NFPA standard applicable to the type of fire suppression system.

3.8 Pressure and Leak Testing

.1 In accordance with the applicable specification sections of Division 21.

END OF SECTION

STANDPIPE AND HOSE SYSTEMS
21 12 13

1 GENERAL

1.1 Scope

.1 Provide Standpipe and Hose Systems as shown with header assembly, piping, supervised valves, Fire Department Connections (Siamese connection), firehose cabinets, hose and fire extinguishers.

.2 Provide fire rated pipe insulation on standpipe risers as shown.

.1 For greater clarity, the contractor under this Section of the Work is responsible for providing the standpipe fire protection system, including any sub-contracting of all or a portion of the Work to another trade.

1.2 Related Sections

.1 Without limiting the scope of work or applicability of other specification sections, the work under this section directly integrates with or refers to the following specification sections:

.1 20 05 63 Safety Bollards and Machine Guards

.2 21 05 01 Common Work Results for Fire Suppression

.3 20 08 11 Testing of Integrated Mechanical Life Safety and Fire Protection Systems

.4 21 05 23 General-Duty Valves for Fire Protection

1.3 Definitions and Abbreviations

.1 The following definitions apply to this section.

.1 ***Class I*** (hose cabinet) – in accordance with NFPA 14 (NPS 2-1/2 valve only),

.2 ***Class II*** (hose cabinet) – in accordance with NFPA 14 (NPS 1-1/2 valve only),

.3 ***Class III*** (hose cabinet) – in accordance with NFPA 14 (NPS 1-1/2 and NPS 2-1/2 valves),

1.4 Applicable Codes and Standards

.1 Legislation:

.1 Ontario Building Code

.2 Installation codes and standards:

.1 NFPA 14 Standard for the Installation of Standpipe and Hose Systems

.2 NFPA 24 Standard for the Installation of Private Fire Service Mains and Their Appurtances

.3 NFPA 25 Standard for the Inspection, Testing, and Maintenance of Water-Based Fire Protection Systems

.3 Product standards:

.1 ULC-S511 Standard for Lined Fire Hose for Interior Standpipes and Municipal and Industrial Fire Protection Service

.2 ULC-S513 Standard for Threaded Couplings for 38 mm and 65 mm Fire Hose

.3 ULC-S543 Standard for Internal Lug Quick-Connect Couplings for Fire Hose

.4 UL401 Standard for Portable Spray Hose Nozzles for Fire-Protection Services

1.5 Qualified Tradesperson

.1 Work to be performed by qualified, licensed and recognized fire protection firm with an established reputation in this field, using tradesperson holding applicable certificates of competency for fire protection systems.

1.6 Design Criteria

.1 Piping design temperature: 38°C (100°F)

.2 Piping design pressure: 1200 kPa (175 psig)

.3 Standpipe system type: stand-alone.

.1 Wet pipe sprinkler system to conform to specification section 21 13 13.

.4 Consultant's indicative system layout is hydraulically designed to NFPA 14[and FM requirements

.1 Hydraulic calculations are based on water supply test results, down-rated in accordance with requirements of the AHJ.

1.7 Design Services

.1 Provide engineering design services for the standpipe system, including piping system detailed fabrication and installation drawings, supported by contractor's own hydraulic calculations and water supply test flow data.

.2 Design of standpipe systems is to conform with the requirements of NFPA 14 of the edition adopted by the AHJ, except/and as otherwise specified herein.

.3 Coordinate standpipe system layout with the work of other Trades. Prepare fabrication/installation drawings taking into account this coordination.

.4 Conduct a site water flow test and prepare hydraulic calculations based on those test results.

1.8 Submittals

.1 Submit product data sheets for:

.1 fire hose cabinets,

.2 fire department connections.

.2 Prepare and submit shop drawings for standpipe system fabrication and installation drawings including hydraulic calculations;

.1 forward three copies to Owners Insurers for review and acceptance,

.2 after shop drawings are accepted by reviewing authority, submit copies of these stamped shop drawings and product data sheets to Consultant for review.

1.9 Operating and Maintenance Data

.1 Submit record documents including operating and maintenance materials as required by NFPA 14, including a copy of NPFA 25.

2 PRODUCTS

2.1 General

.1 Provide firehose cabinets, hose racks, hose fittings, fire extinguishers and fire department connections, from one manufacturer/supplier. Product model numbers of National Fire Equipment Ltd. have been used to indicate construction features and quality standards not otherwise described.

Standard of Acceptance

- National Fire Equipment
- Wilson & Cousins
- Impact Fire Equipment

2.2 Pipe, Fittings and Valves

.1 Pipe and fittings: in conformance with specification section 21 05 01 except/and as specified herein.

.2 Valves: in conformance with specification section 21 05 23.

.3 Pipe minimum wall thickness: in accordance with Table 1 except as follows:

.1 use schedule 40 of either ASTM A53 or A135 in the following locations:

(a) exposed vertical piping in parking garages, truck docks and other areas subject to vehicular traffic, between floor level and to a height of 3.0 m (10 ft) above floor level,

(b) exposed vertical piping in factories and manufacturing plants, between floor level and to a height of 5.0 m (15 ft) above floor level or the bottom of the roof structural steel, whichever is lower,

(c) do not use ASTM 795 in the above listed locations.

Table 1: Pipe Selection and Minimum Pipe Wall Thickness

Pipe Size	Jointing Method	ASTM A53, ASTM A135	ASTM A795
≤ 2-1/2	Threaded, Cut Groove	Schedule 40	Standard Weight
2-1/2 to 6	Welded, Roll Groove	Schedule [10][40]	Light-Weight
	Cut Groove	Schedule 40	Standard- Weight
8 to 10	Welded Roll Groove	Schedule [20][30][40]	Light-Weight
	Cut Groove	Schedule 40	Standard-Weight
≥ 12	Welded, Roll Groove	9.5 mm (0.375 in)	Not applicable

2.3 Hose Cabinets

.1 Flush mounted in finished areas, and surface mounted in service areas, unless otherwise shown.

.2 Cabinets to include:

.1 NPS 1-1/2 angle hose valve and/or NPS 2-1/2 valve based on cabinet Class type,

.2 Ø38 mm (1-1/2 in. dia.) hose and rack, fire hose nozzle and spanner (Class II and III only),

.3 fire extinguisher.

.3 Tub:

.1 1.2 mm (18 ga) steel tub, baked white enamel finish,

.2 size:

(a) Class I cabinets: 356 x 1067 x 203 mm (14 x 42 x 8 in)
(b) Class II and III and III cabinets: 762 x 762 x 203 mm (30 x 30 x 8 in).

.3 pipe openings to suit NPS 1-1/2, NPS 2-1/2, or both valve connections as shown;
(a) for Class I and III cabinets, located hose valve at bottom of cabinet.
(b) centerline distance between valve openings (Class III cabinets): 560 mm (22 in.).

.4 Door:

.1 2.0 mm (14 ga) steel door and trim frame, baked grey enamel finish, 50 mm (2 in) wide face frame with 12 mm (1/2 in.) turnback edge,

.2 full-length semi-concealed piano hinge allowing full 180° door opening swing,

.3 flush stainless steel door latch,

.4 6 mm (¼ in) plate glass viewing panel [90 % area of door] [33% of door area].

.5 [][Door lock with break glass:

.1 only for designated cabinets as shown,

.2 doors equipped with a common-keyed door lock,

.3 door glass to be break-glass or scored glass, to permit access to an internal door lock release lever.]

.6 Surface finish as specified in article “Finishes for Fire Hose Cabinets and Components”.

Standard of Acceptance

° National Fire Equipment - fig. Knight 100-2 (for Class II cabinets)
° National Fire Equipment - fig. Knight 200-2 (for Class I and III cabinets)

.7 Includes fire extinguisher in accordance with specification section 21 12 29.

2.4 Hose Racks for Cabinets

.1 Stationary pin-rack, zinc-plated pins, for mounting on back-wall of fire hose cabinet,

.2 Water stop for one-person use, prevents water flow until last hose fold is removed,

.3 With 30 m (100 ft) of Ø38 mm (1-1/2 in. dia.) single jacket lined hose.

Standard of Acceptance

° National Fire Equipment – fig. S-4 rack with fig. S-5 water stop.

2.5 Open Hose Racks for Standpipes

.1 Rotating pin-rack, zinc-plated pins, for direct mounting to standpipe, without fire hose cabinet,

.2 Nozzle clip holder,

.3 Water stop for one-person use, prevents water flow until last hose fold is removed,

.4 Steel body with powdercoat red finish,

.5 With 30 m (100 ft) of Ø38 mm (1-1/2 in. dia.) single jacket lined hose.

Standard of Acceptance

° National Fire Equipment - fig. HR

2.6 Fire Hose and Nozzle

.1 Hose:

.1 listed to ULC-S511 and FM approved,

.2 hose length and size: 30 m (100 ft) of Ø38 mm (1-1/2 in. dia.),

.3 material: polyurethane lined 100% synthetic twisted polyester filament type,

.4 end fittings: chrome plated forged brass couplings with spanner lugs on both male and female ends, to ULC-S513 (threaded) or ULC-S543 (internal lug quick connect) in accordance with local fire departments requirements.

.2 Nozzle:

.1 listed to UL401 and FM approved.

.2 nominal Ø38 mm (1½ in. dia.), chrome plated nozzle, adjustable combination fog-straight stream with shut-off, and bumper stop.

Standard of Acceptance

° National Fire Equipment - fig. A7B

2.7 First Aid Stream Angle Hose Valves (Ø38 mm hose valve)

.1 Listed to ULC/ORD-C668 and FM approved.

.2 Surface finish as specified in article “Finishes for Fire Hose Cabinets and Components”.

.3 Standard type:

.1 NPS 1½ angle pattern, brass or bronze body, with hand wheel and integral hydrolator.

.2 maximum inlet pressure rating: 1200 kPa (175 psig)

Standard of Acceptance

° National Fire Equipment - fig. A51

.4 Pressure restricting type:

.1 where standpipe operation pressure exceeds 690 kPa (90 psi) but not more than 1050 kPa (150 psi):

.2 NPS 1 ½ angle pattern, brass or bronze body, adjustable pressure restricting angle valve with hand wheel and integral hydrolator controlling maximum outlet residual pressure to 550 kPa (80 psi).

.3 maximum inlet pressure rating: 2000 kPa (300 psig)

Standard of Acceptance

° National Fire Equipment - fig. A156

.5 Pressure reducing type:

.1 where standpipe operation pressure exceeds 1050 kPa (150 psi):

.2 NPS 1½ angle pattern, bronze body, pressure reducing valve to control outlet residual and static pressure under flow and no-flow conditions to 550 kPa (80 psig).

.3 maximum inlet pressure rating: 2060 kPa (300 psig)

Standard of Acceptance

- National Fire Equipment - Model Z2100

2.8 Fire Department Angle Hose Valves (Ø65 mm hose valves)

.1 Listed to ULC/ORD-C668 and FM approved.

.2 Standard type:

.1 surface finish as specified in article “Finishes for Fire Hose Cabinets and Components”.

.2 NPS 2½ angle pattern, brass or bronze body, male outlet, with handwheel, cap and chain,

.3 valve thread compatible with local fire department hose.

.4 maximum inlet pressure rating: 2000 kPa (300 psi).

Standard of Acceptance

- National Fire Equipment - fig. NFE 25

.3 Pressure-reducing type:

.1 surface finish as specified in article “Finishes for Fire Hose Cabinets and Components”.

.2 NPS 2½ angle, bronze body, male outlet, with handwheel, cap and chain, outlet pressure factory set,

.3 factory set outlet pressure control setpoint,

.4 valve thread compatible with local fire department hose.

.5 maximum inlet pressure rating: 2750 kPa (400 psi).

.6 supplementary valve tag identifying the project floor level for which the valve outlet control pressure has been set, including inlet static and residual pressures.

Standard of Acceptance

- National Fire Equipment - fig. Z4000

2.9 Swinging Hose Reel

.1 Designed so that hose can be removed from reel when water is flowing, and with 38 mm (NPS 1½ in) nominal diameter hose 30 m (100 ft) long and Underwriters' type "fog-solid stream shut-off" nozzle.

.2 Hose station:

.1 hose: Ø40 mm (1½ in. dia.) unlined linen hose,

.2 hose Length: [23 m (75 ft)][30 m (100 ft)],

.3 wall-mounted hose reel rack, steel with baked enamel red finish, 180° swing

.4 with hydrolator, 1½ NPS angle valve and chrome plated combination fog, solid stream and shut-off nozzle.

Standard of Acceptance

- National Fire Equipment - fig. R15
- Wilson & Cousins - fig. IE7]

2.10 Fire Department Connection

.1 In accordance with specification section 21 05 01.

2.11 Pressure Reducing Valves

.1 Pressure reducing valves:

.1 in accordance with specification section 21 05 01.

.2 Pressure relief valves:

.1 for installation downstream of pressure reducing valve,

.2 of type and performance as recommended by pressure reducing valve manufacturer,

.3 direct acting type or pilot operated type,

.4 selected to suit capacity of pressure reducing valve,

.5 supplied with associated pressure reducing valves for field installation.

2.12 Finishes for Fire Hose Cabinets and Components

.1 Finished areas;

.1 cabinet tub interior: white.

.2 cabinet door and frame: [No.4 satin finish stainless steel] [prime painted],

.3 valves, nozzle, fittings, hose rack and spanner: chrome plated.

.2 In parking garages and building service rooms (mechanical areas, boiler rooms, penthouse mechanical rooms, and fan rooms):

.1 cabinet tub interior: white.

.2 cabinet door and frame: red.

.3 valves, nozzle, fittings, hose rack and spanner: rough brass or bronze.

2.13 Fire Rated Insulation for Pipe Protection

.1 Fire-rated pipe insulation):

.1 foil encapsulated, fire resistant insulation blanket,

.2 listed to CAN/ULC-S144 for two hour fire resistance rated ducts,

.3 manufacturer's supporting documentation for protection of piping for fire protection, for a period of two hours when exposed to temperatures up to 200°C (392°F) in a sprinklered building,

.4 listed to CAN/ULC-S102.2 for a flame spread rating not exceeding 25 and a smoke development rating not exceeding 50.

Standard of Acceptance

- Thermal Ceramics – Firemaster FastWrap XL
- 3M - Fire Barrier Duct Wrap 615 System]

3 EXECUTION

3.1 Backflow Protection

.1 Provide backflow preventers in accordance with specification section 21 05 01 except/and as specified herein.

.2 Provide a [double check valve assembly][reduce pressure principle] backflow preventer at the point of connection [to the building domestic water pipe.][for the premises isolation on municipal water services dedicated for fire protection.]

3.2 Piping Installation General Requirements

.1 Install standpipe piping and supports in accordance with specification section 21 05 01 except/and as specified herein.

.2 Install water piping and fire protection header as shown. Provide supervised isolating valves and run piping to fire hose cabinets, [hose racks,] [and automatic sprinkler zone piping.]

.3 Provide drain valves to drain piping system, arranged to allow isolation and draining of each standpipe riser without shutting down other parts of system.

.4 Install Fire Department connection for main fire line as shown, with check valve and NPS ¾ automatic drip connection in line between connection and check valve.

3.3 Fire Hose Cabinet Installation

.1 Install fire hose cabinets so that the horizontal centerline of the valve is located at the following height above adjacent finished floor level:

.1 Class I hose cabinets: 950 mm (37.5 in.) to NPS 2-1/2 valve,

.2 Class II hose cabinets: 1400 mm (55 in.) to NPS 1-1/2 valve,

.3 Class III hose cabinets: 950 mm (37.5 in.) to NPS 2-1/2 valve.

3.4 Pressure Gauges

.1 Install pressure gauge with 0 to 2000 kPa (0 to 300 psi) scale range, with isolating valves, at the following locations on the standpipe system:

.1 In the stand-pipe immediately downstream of a fire pump,

.2 on the connection to the municipal water supply,

.3 at the top of each standpipe riser or combination standpipe/sprinkler riser,

.4 on the inlet and outlet of each pressure reducing valve (except those in hose cabinets),

.5 on the inlet and outlet side of a pressure reducing valve,

.6 at the lowest elevation of each piping zone, such as a zone drain valve,

.7 at the system riser drain valve,

.8 and as shown.

.2 Select each pressure gauge range so that its maximum reading is at least 2.0 times the expected operating static pressure at the location of the gauge.

3.5 Protection of Standpipes from Mechanical Damage

.1 Where sprinkler risers are subject to impact from vehicles, including lift trucks and movable equipment, provide at least two (2) protection bollards in close proximity in front of the risers, constructed in accordance with specification section 20 05 63.

3.6 Protection of Standpipes from Fire Exposure

.1 Install vertical standpipe risers in exit stairwells or fire rated vertical service spaces. In other locations, unless otherwise shown to be protected by a building element having a 1 hour fire resistance rating, insulate the vertical standpipe riser with a 1 hr fire-rated insulation system.

.2 In non-sprinklered buildings, unless otherwise shown to be protected by a building element having a 1 hour fire resistance rating, insulate the horizontal standpipes, feed mains, and branch lines with a 1 hr fire -rated insulation system.

.3 Wrap pipe hangers in accordance with the fire-rated insulation manufacturer listed installation instructions.

.4 For clarity, fire protection of horizontal standpipes, feed mains, and branch lines are not required to be fire protected in a sprinklered building.

3.7 Flushing and Cleaning of Piping

.1 Flush and clean underground piping serving standpipe systems in accordance with the requirements of NFPA 14 and NFPA 24.

.2 Flush-out fire department connection piping up to the standpipe prior to installation of the fire department connection.

3.8 Pressure Testing

.1 Conduct a hydrostatic pressure test of standpipe piping systems in accordance with requirements of NFPA 14 and building insurer requirements, if any, and as follows.

.2 [][In existing buildings, conduct an initial pneumatic pressure test of the new and modified work before connection to the existing system, to test for significant leaks before filling the modified installation or new work with water.

.1 isolate the new piping from the existing system,

.2 pressure test the new piping at 280 kPa (40 psig) using oil-free compressed air or nitrogen,

.3 maintain pressure test for one hour without loss of pressure,

.4 if any leaks are discovered, repair leaks and retest.]

.3 Conduct hydrostatic pressure tests at the test pressures and for the test durations as follows:

.1 for new piping systems with a working pressure of 1030 kPa (150 psi) or less:

(a) a minimum of 1380 kPa (200 psi) for a test period of not less than two hours,

.2 for new piping systems or portion thereof with a working pressure of greater than 1030 kPa (150 psi):

(a) a minimum of the working pressure plus 345 kPa (50 psi) for a test period of not less than two hours,

.3 pressure measurements to be taken at the lowest level of the system or zone under test,

.4 Where testing with water may pose a risk due to freezing temperatures, conduct an initial pneumatic test with dry-nitrogen or dry-compressed air, at a pressure of 280 kPa (40 psi) for a period of 24 hours;

.1 acceptance criteria: a pressure drop of not less than 10 Pa (1.5 psi) at the end of the test period,

.2 conduct a final hydrostatic pressure test once the risk of freezing is no longer present.

.5 For pressure testing of modifications to existing systems:

.1 isolate new portions of the Work and pressure test as specified above for new systems,

.2 where the new work terminates at a direct pipe connection or at a valve, the new piping up the first new valve is to be subjected only to an in-service hydrostatic pressure test,

.6 Pressure testing of multi-storey buildings:

.1 pressure test the standpipe risers zones separate and isolated from each other except that the feed main connecting the risers may be included in the riser pressure test,

.2 in combined sprinkler/standpipe systems, hydrostatically pressure test the sprinkler zone piping separate from the standpipe riser,

.7 Pressure test acceptance criteria:

.1 pressure loss not exceeding 35 kPa (5 psi) as measured by installed pressure gauge, or where visual examination of all pipe joints determines there are no visible leaks.

3.9 Operational Testing

.1 Verify hose connections are compatible with the local fire department hoses.

.2 Conduct a water flow test in accordance with NPFA 14 and as specified herein. Arrange and pay for any temporary equipment or services required to perform the tests.

.3 Conduct a flow test by flowing water simultaneously from the minimum number of hose outlets required for the system.

.4 Test and verify static and residual operating pressures at the top of each standpipe riser and at the lowest hose connection on each riser during the water flow rate tests.

.5 Test and verify correct operation of pressure reducing valves (both system and hose valves) under flow and no-flow conditions. Test and verify correction pressure setting of pressure restricting hose valves under flow conditions.

.1 for hose valves, apply a permanent adhesive label adjacent to each hose valve indicating static and residual as-tested pressures.

.6 Test and verify the operation of backflow preventers in accordance with CSA B64.10, by a person authourized by the municipality to conduct such tests. Submit a written test report for each backflow preventer tested.

.7 Test and verify operation of all manual valves, and alarm annunciation of supervisory devices.

.8 Schedule testing to give at least two weeks' notice to AHJs having jurisdiction for:

.1 building/plumbing Inspector,

.2 fire department representative,

.3 insurer's representative,

.4 Owner, and

.5 Consultant.

.9 Prior to testing, ensure that valves, pressure switches, supervisory switches and other devices are functioning and in-service.

3.10 Integrated Testing of Life Safety and Fire Protection Systems

.1 Participate as required in the integrated system testing of the standpipe system in accordance with specification section 20 08 11.

3.11 Testing Reports and Certificates

.1 Provide completed and signed Contractor's Material and Test Certificate for above ground piping in accordance with NFPA 14.

.2 Submit copies of completed Certificates to the Consultant, and include copies in the Operating and Maintenance manuals.

END OF SECTION

COMMON WORK RESULTS FOR PLUMBING PIPING
22 05 01

1 GENERAL

1.1 Scope

.1 Provide piping systems for plumbing, drain and vent systems for:

- .1 potable (domestic) water systems,
- .2 non-potable water piping systems,
- .3 drainage system including:
  - (a) sanitary drainage and vent systems,
  - (b) storm water drainage systems,
  - (c) pumped sewage systems.
- .4 other plumbing systems including:
  - (a) irrigation systems,
  - (b) grey water systems,
  - (c) specific duty piping systems otherwise specified in Division 22.

1.2 Related Sections

.1 Without limiting the scope of work or applicability of other specification sections, the work under this section directly integrates with or refers to the following specification sections:

- .1 20 05 73.13 Mechanical Services for General Facility Equipment
- .2 22 05 19 Utility Water Meters

1.3 Applicable Codes and Standards

.1 Legislation:

- .1 Ontario Building Code
- .2 Municipal bylaws regarding potable water, water services, and sewage systems.

.2 Installation standards and codes:

- .1 AWWA C651 Disinfecting Water Mains.

.3 Product standards:

- .1 CSA B272 Pre-Fabricated Self Sealing Roof Vent Flashings

1.4 Qualified Tradesmen

.1 Work to be performed by qualified and recognized firm with an established reputation in this field, using tradesmen holding certificates of competency.

1.5 Design Criteria – Pressure Piping Systems

.1 The following design conditions apply unless otherwise shown on drawings.

.2 System design criteria:

- .1 Domestic Cold Water Service (to building):
  - (a) Design pressure: 900 kPa (130 psig)
  - (b) Design temperature: 25°C (77°F)

.2 Potable water:
  (a) Design pressure: 900 kPa (130 psig)
  (b) Design temperature: 107°C (225°F)

.3 Non-potable water:
  (a) Design pressure: 900 kPa (130 psig)
  (b) Design temperature: 107°C (225°F)

.4 Pumped sanitary and storm:
  (a) Design pressure: [350 kPa (50 psig)][700 kPa (100 psig)]
  (b) Design temperature: 65°C (150°F)

.5 Grey water:
  (a) Design pressure: 900 kPa (130 psig)
  (b) Design temperature: 38°C (100°F)

2 PRODUCTS

2.1 Flashings

.1 Through-roof penetration flashing, and other waterproofed areas:
  .1 manufactured from composite material in accordance with CSA B272,
  .2 minimum dimensions of 500 mm x 500 mm (20 in x 20 in),
  .3 with sleeve extending at least 150 mm (6 in) above roof.

3 INSTALLATION

3.1 Piping

.1 Piping system routing is shown diagrammatically. Locate mains, risers and runouts concealed behind furrings or above ceilings except in mechanical equipment rooms and access spaces where piping is to be exposed.

.2 Determine areas without ceilings from Architectural Drawings and Room Finish Schedules, and in these areas keep piping as high as possible.

.3 Anchor, guide and support vertical and horizontal runs of piping to resist dead load and absorb thrust.

3.2 Domestic Cold Water System Distribution

.1 Extend existing domestic cold water system with
  .1 distribution pipe and fittings,
  .2 valves,
  .3 premises backflow isolation,
  .4 zone or equipment backflow protection.

.2 Minimum water pressure at street level: approximately 500 kPa (70 psi).

.3 Provide valved connections from supply system, to fixtures and other equipment requiring cold water.

3.3 Domestic Hot Water System Distribution

.1 Extend existing domestic hot water system with

.1 distribution pipe and fittings

.2 valves

.3 zone or equipment backflow protection.

.2 Provide cold water connections to hot water tank, with shut-off and expansion tank on supply and valved drain at bottom of tank.

.3 Provide valved connections from hot water supply system to fixtures and other equipment requiring hot water.

3.4 Domestic Hot Water Recirculation System

.1 Extend existing domestic hot water recirculation system with

.1 distribution pipe and fittings

.2 valves

.3 pumps

.2 Connect ends of hot water risers to recirculation mains and extend to recirculation pump.

.3 Provide minimum flow balancing valves at each connection between the domestic hot water loop and the hot water recirculation loop.

3.5 Domestic Water Sub-Meters

.1 Where shown on drawings, install building domestic water sub-meters supplied by the contractor under Division 25.

3.6 Drainage

.1 Provide roof drains and storm drainage piping system.

.2 Provide waste and vent connections to plumbing fixtures and equipment.

.3 Drainage fittings;

.1 do not use double hubs, straight crosses, double T's, or double TY's in soil or waste pipe below any fixture,

.2 do not use branch fittings other than full "Y" or "Y" and an eighth bend, on soil or waste pipe running in horizontal direction,

.3 do not use quarter bend placed on its side,

.4 do not use inverted joints below fixtures,

.5 do not install cleanouts above food preparation or patient treatment areas. In these areas carry rodding connection up to floor cleanout fitted with adjustable gasketed access cover and plug, with cleanout body cast in floor slab above,

.6 drainage fittings to match connected piping for quality and wall thickness.

3.7 Flashings

.1 Provide flashing for piping penetrations through roofs and other waterproofed areas. Leave flashing ready for Roofing or Waterproofing Trades to make watertight connections.

3.8 Vent Termination (VTR)

.1 Fit vents passing through roof with vent stack sleeve terminating not less than 150 mm (6 in) above roof, above flood level of roof, and 900 mm (3 ft) above or 3500 mm (11.5 ft) horizontally from any air intake, door, or operable window.

3.9 Water and Waste Connections

.1 Provide hot and cold water, waste and vent connections to building service equipment. Provide connections to Owners equipment and equipment supplied by Divisions of the Work other than Division 20 to 25, as specified herein and in accordance with specification section 20 05 73.13.

.2 Provide vacuum breakers and backflow preventers on equipment connections, and hose bibs, and on fixture connections without adequate air gaps.

.3 Where hot and cold water supply pipes connect to combination supply fitting with shut-off valve on discharge, or where combination supply fitting is equipped with manual or thermostatic mixing valve, equip each hot and cold water supply pipe with composition disc swing check fitting.

.4 Provide shut-off valve on each service line close to the apparatus and brass traps complete with cleanout on waste connection unless waste discharges directly into floor drain or funnel drain.

.5 Where specific sizes are not shown, valves, and final connections to equipment to be one pipe size larger than equipment tapping size, and trap and drain size to be one pipe size larger than waste connection on apparatus.

3.10 Pressure Testing – Water Pressure Piping Systems

.1 Pressure test piping before insulation is applied.

.2 Initial pneumatic leak test:

.1 Conduct an initial pneumatic pressure test at a maximum pressure of 70 kPa (10 psig) prior to hydrostatic pressure test, to check for large leaks or incomplete joints.

.2 Remove compressed air source and maintain this pressure for the time necessary to inspect for leaks, but not less than 2 hours.

.3 Maintain pressure and examine each joint with commercial leak detector solution.

Standard of Acceptance

- Snoop
- Leak-tec

.4 Repair leaks where found prior to performing hydrostatic pressure tests.

.5 During pneumatic pressure tests, comply with the site safety requirements for notification and guarding during testing with compressed gasses.

.3 Final hydrostatic pressure test:

.1 Use the system design pressure for the entire installation, unless different design pressures are indicated for each floor.

.2 Fill the system with water and gradually increase the system pressure to 150% of the design pressure and hold for 10 minutes, then reduce pressure to the design pressure.

.3 Inspect each pipe joint for leaks.

.4 As an alternative to inspection of each joint for leaks, conduct a 24 hour standing pressure test:

(a) raise the water pressure to 150% of the design pressure for 10 minutes, then reduce pressure to design pressure,

(b) record the test pressure one (1) hour after establishing the system hydrostatic test pressure at the design pressure. Record ambient air temperature at the same time.

(c) at the end of the 24 hour standing test period, record the test pressure and ambient air temperature. Make adjustments to the measured end-of-test pressure to account for change in fluid density due to change in ambient air temperature,

(d) acceptance criteria: maximum pressure loss over 24 hours not to exceed 1% of test pressure, corrected for ambient temperature,

(e) where acceptance criteria is not met, inspect pipe joints for leaks.

.5 Where leaks are found, repair leaks and retest piping as specified above.

(a) for soldered or brazed joints, one attempt at repairing the joint is permitted. If joint continues to fail, cut-out and replace the fitting.

3.11 Pressure Test Report

.1 Maintain a log of all pressure tests, including locating of where leaks have been repaired. Submit the log to the Consultant for review when requesting prior to substantial completion of the Work. Where a piping system is subject to AHJ inspection, provide evidence of such inspection by means of an AHJ inspection report or name of the AHJ inspector and the date they witnessed the pressure test.

3.12 Flushing and Disinfecting - Water Service Pipe

.1 Complete piping pressure tests prior to flushing and disinfecting operations. Notify Consultant at least two days in advance of date when disinfecting operations are proposed, so that the Consultant may witness the tests.

.2 Isolate the water service pipe inside the building at the point of entry, from the building water distribution system. Flush water service pipes for a minimum of 10 minutes to produce a water velocity of 1.5 m/s (5 fps) and discharge water to drain or other acceptable area.

.1 Minimum flushing flow rates:

Pipe size	Minimum Flow	
NPS	L/s	USGPM
2	3.3	52
2 1/2	4.7	75
3	7.3	115
4	12.6	200
6	23.4	450
8	49	780
10	76	1200
12	110	1750

.3 Disinfect water service pipes NPS 4 and larger:

.1 Provide chemicals and equipment to clean, disinfect and flush domestic water service pipes in accordance with AWWA C651.

.2 Drain down system to remove flushing water.

.3 Isolate service water pipe from the building distribution system.

.4 Disinfect water supply pipe by introducing chlorine close to point of connection to the municipal water supply and evenly add to water as water service pipe is refilling, to provide an initial concentration of 50 mg/L.

.5 Close off drains and maintain chlorinated water in mains pipe for 24 hours.

.6 At the end of 24 hours, arrange and pay for laboratory testing of water samples taken from newly disinfected main. If the residual chlorine is < 25 mg/L, drain down water and repeat disinfection for an additional 24 hours and lab testing until a residual of minimum 25 mg/L is obtained.

.7 After the lab test indicates a residual of 25 mg/L, flush line to remove chlorine solution.

3.13 Flushing and Cleaning - Building Water Distribution Piping

.1 Conduct first fill and pressure testing of building distribution piping only after completion of flushing and disinfection of water service pipe.

.2 Complete piping pressure tests prior to flushing and cleaning operations.

.3 Flush water distribution piping through available outlets with sufficient flow to produce velocity of 1.5 m/s, within pipe for 10 minutes, or until foreign materials have been removed and flushed water is clear.

.4 Minimum flushing flowrates:

Pipe size	Minimum Flow	
NPS	L/s	USGPM
2	3.3	52
2 1/2	4.7	75
3	7.3	115
4	12.6	200

.5 Open and close valves, hydrants and service connections to ensure thorough flushing.[][

.6 When flushing has been completed to satisfaction of Consultant, introduce strong solution of chlorine into watermain and ensure that it is distributed throughout entire system:

.1 Drain down system to remove flushing water,

.2 Introduce Chlorine close to point of re-filling of system, and evenly add to water as system is refilling, to provide an initial concentration of 50 mg/L

.3 Operate valves, hydrants, and appurtenances while main contains chlorine solution.

.4 Flush line to remove chlorine solution after 24 hours contact time.

.5 Arrange and pay for laboratory testing of water samples taken from newly disinfected main.

.6 Where samples do not meet laboratory test standard for potable water, disinfection procedure and testing is to be repeated until satisfactory results are achieved.]

3.14 Testing and Balancing – Water Pressure Piping Systems

.1 Balance domestic water piping systems where double regulating valves are installed, including hot water recirculation piping and as otherwise shown.

END OF SECTION

GENERAL-DUTY VALVES FOR PLUMBING PIPING
22 05 23.13

1 GENERAL

1.1 Scope

.1 Provide valves for general duty service in plumbing piping systems, including shut-off valves, check valves, manual balancing valves, and automatic flow balancing valves.

.2 Valves under this specification section are provided for:

.1 Domestic (potable) water systems using copper tubing, stainless steel pipe or tube, ductile iron water piping, and galvanized steel piping.

.2 Non-potable water piping systems including:

(a) Process water systems,

(b) Irrigation systems,

(c) Grey water systems,

(d) Pumped sewage systems.

1.2 Related Sections

.1 Without limiting the scope of work or applicability of other specification sections, the work under this section integrates with or refers to the following specification sections:

.1 20 05 23 General Requirements for Valves

.2 22 05 01 Plumbing - General

1.3 Definitions

.1 The following definitions apply to this section.

.1 ***Contaminant-free:*** means the material is free of contaminants and impurities to the prescribed limits of NSF/ANSI 61 – section 8 (NSF/ANSI 61/8), but excludes evaluation for lead.

.2 ***Lead-free***: means the weighted average lead content does not exceed 0.25% when evaluated in accordance with the test methods in NSF/ANSI 61-Annes G or NSF/ANSI 372.

1.4 Submittals

.1 Conform to the requirements of Specification section 20 05 23 except/and as follows.

.2 For double regulating valves, in addition to manufacturer data sheets, submit a schedule listing all double regulating valves and include the following information:

.1 a valve reference number,

.2 valve service (e.g. associated equipment, or distribution piping service by drawing, room, etc.)

.3 associated pipeline size, NPS

.4 valve body size, NPS

.5 specified design flow rate,

.6 valve minimum and maximum flow rate limits,

.7 valve pressure drop at specified design flow rate,

.8 expected valve open position (number of valve turns open, percent valve stroke, etc.).

.3 For automatic flow balancing valves, in addition to manufacturer data sheets, submit a schedule listing all automatic flow balancing valves and include the following information:

.1 a valve reference number,

.2 valve service (e.g., where the valve is located, floor, room, etc.),

.3 associated pipeline size, NPS

.4 valve body size, NPS

.5 specified design flow rate,

.6 valve fixed flow rate,

.7 valve operating differential pressure range.

1.5 Applicable Codes and Standards

.1 Refer to section 20 05 23 and as specified herein.

.2 Product standards:

.1	CSA B125.3	Plumbing Fittings
.2	NSF/ANSI 61	Drinking Water System Components – Health Effects
.3	NSF/ANSI 372	Drinking Water System Components – Lead Content (formerly NSF/ANSI 61, Annex G).

2 PRODUCTS

2.1 General

.1 Where products are specified as being lead-free, they shall be listed to either:

.1 CSA B125.3;

.2 NSF/ANSI 61-G; or

.3 NSF/ANSI 372.

.2 Where products are specified as being contaminant-free, they shall be listed to either:

.1 CSA B125.3;

.2 NSF/ANSI 61-G; or

.3 NSF/ANSI 61/8

2.2 Ball Valves: Brass Body (type BV-1)

.1 NPS 4 and under, copper alloy body:

.1 To MSS SP-110, 600 CWP, two-piece bronze or DZR brass body, full port, stainless steel or chrome plated bronze ball, PTFE seat rings, solder or NPT threaded ends.

.2 Handle extensions suitable to clear 50 mm (2 in) pipe insulation thickness.

.3 Required MCPR: 2500 kPa (363 psig) at 93°C (200°F).

.4 Certified for lead-free and contaminant-free service.

.5 Soldered ends: NPS 2 and under.

Standard of Acceptance

- Kitz - fig. 859
- Apollo - fig. 77FLF-20x

- Nibco - fig. S-685-66-LF
- Watts - fig. LFB6081

.6 Threaded ends: NPS 4 and under.

Standard of Acceptance

- Kitz - fig. 858
- Apollo - fig. 77FLF-10x
- Nibco - fig. T-685-66-LF
- Watts - fig. LFB6080

2.3 Ball Valves: Stainless Steel Body (type BV-2)

.1 NPS 4 and under, threaded ends:

.1 To MSS SP-110, 600CWP, two piece T316 stainless steel body, full port, stainless steel or chrome plated bronze ball, PTFE seat rings, NPT threaded ends.

.2 Handle extensions suitable to clear 50 mm (2 in) pipe insulation thickness.

.3 Required MCPR: 2500 kPa (363 psig) at 93°C (200°F).

.4 Certified for lead-free and contaminant-free service.

Standard of Acceptance

- Apollo - fig. 76F-10x series (NPS 2 and under)
- Watts - fig. S-FBV-1 series

.2 NPS 1- ½ to NPS 12, flanged ends:

.1 To MSS SP-72, two piece CF8M stainless steel body, full port, stainless steel ball, PTFE seat rings, flanged ends.

.2 Locking handles up to NPS 4, and gear operators for NPS 6 and over.

.3 Certified for lead-free and contaminant-free service.

.4 ASME Class 150:

(a) Required MCPR: 1600 kPa (232 psig) at 93°C (200°F).

Standard of Acceptance

- Apollo - fig. 87A-200 series

.5 ASME Class 300:

(a) Required MCPR: 4000 kPa (580 psig) at 93°C (200°F).

Standard of Acceptance

- Apollo - fig. 87A-900 series

2.4 Globe Valves (type GLV-1)

.1 NPS 2 and under:

.1 To MSS SP-80, Class 125 bronze body valves, brass or bronze disc, threaded bonnet, threaded or soldered ends.

.2 Required MCPR: 1200 kPa (174 psi) at 93°C (200°F).

.3 Certified for lead-free and contaminant-free service.

.4 Soldered ends:

Standard of Acceptance

- Kitz - fig. 812
- Apollo - fig. 121S-LF

.5 Threaded ends:

Standard of Acceptance

- Kitz - fig. 811
- Apollo - fig. 121T-LF

2.5 Gate Valves: Bronze Body (type GTV-1)

.1 NPS 2 and under:

.1 To: MSS SP-80, Class 125; or MSS SP-139, 300 CWP, bonze body, solid wedge brass or bronze disc, non-rising stem, screw in or union bonnet.

.2 Required MCPR: 1200 kPa (174 psi) at 93°C (200°F).

.3 Certified for lead-free and contaminant-free service.

.4 Soldered ends:

Standard of Acceptance

- Kitz - fig. 828
- Apollo - fig. 102SLF
- Crane (GGC) - fig. LF1320
- Nibco - fig. S-111-LF

.5 Threaded ends:

Standard of Acceptance

- Kitz - fig. 827
- Apollo - fig. 102TLF
- Crane (GGC) fig. LF438
- Nibco - fig. T-113-LF

2.6 Gate Valves: Cast Iron Body (type GTV-2)

.1 NPS 2 to 12:

.1 To: MSS SP-70, Class 125, cast iron body, solid wedge bronze disc and bronze seat rings, adjustable graphite stem packing, bolted bonnet.

.2 Finish: FDA food grade epoxy power coat,

.3 Required MCPR: 1380 kPa (200 psi) at 38°C (100°F).

.4 CRN to CSA B51,

.5 Certified for lead-free and contaminant-free service.

.6 End connections: flat-faced flanged, suitable for ASME Class 125 and Class 150 pipe flanges,

.7 Non-rising stem:

Standard of Acceptance

- Apollo - fig. 610F-LF

.8 Outside screw and yoke:

Standard of Acceptance

- Apollo - fig. 611F-LF

2.7 Gate Valves, Non-Potable Applications (type GTVNP)

.1 For non-potable water systems only. Do not use on potable water systems.

.2 NPS 2½ to NPS 12, cast iron:

.1 To MSS SP-70, Class 125, cast iron body with flat faced flange, bronze or bronze faced solid wedge disc with bronze seat rings, OS & Y, bolted bonnet, flanged ends.

(a) Required MCPR: 1200 kPa (174 psi) at 93°C (200°F).

Standard of Acceptance

- Kitz - fig. 72
- Crane - fig. 465 ½
- Jenkins - fig. 454J
- Nibco - fig. F-617-O

.3 NPS 2½ to NPS 24, stainless steel:

.1 To ASME B16.34, Class 150, ASTM A216 grade WCB cast steel body with raised faced flange, flexible Type 416 stainless steel disc and hard faced seat rings, rising stem, OS & Y, bolted bonnet, flanged ends.

.2 ASME Class 150:

(a) Required MCPR: 1700 kPa (246 psi) at 93°C (200°F).

Standard of Acceptance

- Kitz - fig. 150 SCLS
- Crane - fig. 47 XU-F
- Jenkins - fig. J1009B8F
- Powell - fig.1503-FC8G

.3 ASME Class 300:

(a) Required MCPR: 4000 kPa (580 psi) at 93°C (200°F).

Standard of Acceptance

- Kitz - fig. 300 SCLS
- Crane - fig. 33 XU-F
- Powell - fig. 3003-FC8G

2.8 Butterfly Valves - Flanged

.1 NPS 2 to NPS 12, ductile iron (type BFV-1):

.1 To MSS-SP-67, ductile iron lug body style, with flange bolt holes drilled and tapped for ANSI 150 flange pattern.

.2 Required MCPR: 1200 kPa (174 psi) at 93°C (200°F).

.3 Stainless steel shaft, aluminum bronze or 316 stainless steel or ductile iron/nickel plated disc, and replaceable EPDM resilient seat to provide bubble tight shut-off under system pressure from either side with flange removed from un-pressurized side.

.4 ISO 5211 mounting pad.

.5 Locking handles up to NPS 4, and gear operators for NPS 6 and over.

.6 Certified for lead-free and contaminant-free service.

Standard of Acceptance

- Nibco - fig. LD-2000
- Apollo - fig. LD 141, LD 145
- Kitz - fig. 6122EL
- MA Stewart - fig. L-D-4-A-E-LH
- Watts - fig. DBF-03
- Milwaukee - fig. ML233E, ML333E
- Crane Center Line fig. 200

.2 NPS 2 to NPS 12, stainless steel (Type BFV-2):

.1 To MSS-SP-68, Class 300, CF8M stainless steel lug body style, with flange bolt holes drilled and tapped for ANSI 300 flange pattern.

.2 Required MCPR: 4000 kPa (580 psi) at 93°C (200°F).

.3 T316 or 17-4 stainless steel disc and shaft, TFM-PTFE seat complete with titanium or 316 stainless steel spiral wound back-up ring to provide bubble tight shut-off under system pressure from either side, when installed with single flange.

.4 ISO 5211 mounting pad.

.5 Locking handles up to NPS 4, and gear operators for NPS 6 and over.

.6 Certified for lead-free and contaminant-free service.

Standard of Acceptance

- Apollo - fig. 230
- Keystone - fig. K-Lok 37

2.9 Butterfly Valves – Groove Ends

.1 NPS 2 to NPS 12, stainless steel (type BFV-4).

.1 To MSS SP-67, CF8M stainless steel body, and grooved ends to CSA B242.

.2 Required MCPR: 2000 kPa (290 psi) at 93°C (200°F).

.3 Stainless steel shaft, CF8M stainless steel disc, and fluoroelastomer seat to provide bubble tight shut-off under system pressure from either side with flange removed from un-pressurized side.

.4 ISO 5211 mounting pad.

.5 Locking handles up to NPS 3, and gear operators for NPS 4 and over.

.6 Certified for lead-free and contaminant-free service.

Standard of Acceptance

- Victaulic - fig. Vic 300 MasterSeal series 461

.2 NPS 2-1/2 to NPS 6, grooved ends for copper tubing (type BFV-5).

.1 To MSS SP-67, brass or bronze body, grooved ends for copper tubing.

.2 Required MCPR: 2000 kPa (290 psi) at 93°C (200°F).

.3 Stainless steel shaft, aluminum bronze disc with fluoroelastomer seat or ductile iron with EPDM encased disc/seal combination.

.4 ISO 5211 mounting pad.

.5 Locking handles up to NPS 6.

.6 Certified for lead-free and contaminant-free service.

Standard of Acceptance

- Victaulic - fig. Vic 608N
- Gruvlok - fig. AN6721

2.10 Inline Silent Check Valves

.1 NPS 2 and under:

.1 To MSS SP-80, Class 125, bronze or stainless steel body, inline spring-actuated disc or ball type, and PTFE or EPDM seat.

.2 Required MCPR: 1200 kPa (174 psi) at 93°C (200°F).

.3 Certified for lead-free and contaminant-free service.

.4 Soldered ends:

Standard of Acceptance

- Nibco – fig. S-480-Y-LF
- Apollo – fig. CVB-LF (61LF-600)
- Kitz – fig. 826

.5 Threaded ends:

Standard of Acceptance

- Nibco - fig. T-480-Y-LF
- Apollo - fig. CVB-LF (61LF-500)
- Kitz - fig. 836

.2 NPS 2 to NPS 12:

.1 To MSS SP-125, cast iron body with flat faced flange or wafer body, inline spring-actuated silent type, replaceable PTFE or BUNA-N seats, bronze faced iron or bronze disc.

.2 Required MCPR: 13200 kPa (188 psi) at 65°C (150°F).

.3 Certified for lead-free and contaminant-free service.

.4 Class 125:

(a) Required MCPR: 1380 kPa (200 psi) at 65°C (150°F).

Standard of Acceptance

- Nibco - fig. F-910-W-LF, W-910-LF
- Valmatic - fig. VM-8802-S

.5 Class 250:

(a) Required MCPR: 2700 kPa (392 psi) at 65°C (150°F).

Standard of Acceptance

- Nibco - fig. F-960-W-LF, W-910-LF
- Valmatic - fig. VM-8802-S

.3 NPS 2 and over, grooved ends:

.1 CF8M stainless steel body with spring-assisted twin stainless steel discs, and fluoroelastomeric seat.

.2 Required MCPR: 2000 kPa (290 psi) at 93°C (200°F).

.3 Certified for lead-free and contaminant-free service.

Standard of Acceptance

- Victaulic - fig, 816

2.11 Swing Check Valves – Non-slam

.1 For building sump pumps service only.

.2 NPS 2 and larger, flanged:

.1 To MSS SP-71, Class 125, swing check type with external lever weight and/or spring closure, cast iron body, renewable bronze seat rings, bronze faced iron or bronze disc, bolted cap, flanged ends.

.2 Required MCPR: 1200 kPa (174 psi) at 93°C (200°F).

Standard of Acceptance

- Val-Matic - fig. 7800LW / 7800LS
- DeZurik - fig. APCP swing check

2.12 Double Regulating Valves (DRVLF)

.1 NPS 3 and under, threaded or soldered:

.1 Brass body, plug type stem with flow measurement ports and tamper-proof setting.

.2 NPT threaded or soldered ends.

.3 Required MCPR:

(a) Soldered: 2000 kPa (300 psig) at 93°C (200°F).

(b) Threaded: 2750 kPa (400 psi) at 93°C (200°F).

.4 Certified for lead-free and contaminant-free service.

Standard of Acceptance

- Bell and Gossett - fig. CB-*-LF, RF-*-LF
- Nexus - fig. Ultra MBNL
- Victaulic/Tour and Anderson - fig. 78BL

.2 Flow meter for DRVs:

.1 Differential pressure gauge with calibration charts or digital flow meter type.

.2 Hoses and fittings to suit manual double regulating valves.

Standard of Acceptance

- Bell and Gossett - Readout Kit

- Nexus - Meter Kit, MKM series

2.13 Automatic Flow Balancing Valve (AFBV)

.1 NPS ½ to NPS ¾, threaded:

.1 Automatic flow balancing valve providing constant flow rate over a wide differential pressure control range.

.2 Stainless steel or brass body, with stainless steel cartridge and EPDM seals.

.3 Performance:

(a) +/- 5% flow rate over 95% of control range.

(b) Differential pressure control range: minimum of 14 to 220 kPa (2 to 32 psi) operating range.

.4 NPT threaded ends.

.5 Minimum MCPR: 2750 kPa (400 psi) at 93°C (200°F).

.6 Certified for lead-free and contaminant-free service.

Standard of Acceptance

- Victaulic/Tour and Andersson - fig. 76X
- Griswald Controls - fig. K Valve

2.14 Solenoid Valves for Potable Water

.1 Construction:

.1 2-way bronze, brass or composite engineered plastic body valve with EPDM seals and disc,

.2 control function: On/Off,

.3 for normally closed or normally open operation as shown,

.4 pilot operated electric solenoid with general purpose enclosure and conduit hub,

.5 minimum allowable working pressure: 1035 kPa (150 psig),

.6 minimum operating differential pressure: 820 kPa (120 psi)

.7 minimum design temperature: 82°C (180°F)

.8 manual override operator for normally-closed valves,

.9 pipe ends: ASME B1.20.1 NPT threaded ends, or push/twist lock connector for copper tube,

.10 certified for lead-free and contaminant-free service.

.11 listed to CSA C22.2 No. 139,

.12 power supply: 24 VAC, 24 VDC or 120 VAC.

.13 valve size limits based on service temperature:

Valve Size	Maximum Water Temperature
NPS 1	50°C (122°F)
NPS ¾ and smaller	82°C (180°F)

Standard of Acceptance

- ASCO - fig 212

3 EXECUTION

3.1 Installation

.1 Refer to section 20 05 23 and as required herein.

.2 Use certified lead-free and contaminant-free valves on potable cold, hot and recirculating water systems. Valves not certified as lead-free may only be used on non-potable water systems, pumped drainage systems and other similar systems.

3.2 Valve Selection Based on Pressure Rating

.1 Unless otherwise specified herein or shown, select valves that have a Minimum Component Pressure Rating (MCPR) which exceed the applicable piping system Design Pressure and Design Temperature specified in section 22 05 01.

.2 Where drawings indicate either: (a) a pressure rating; or (b) a pressure rating and Class rating, by floor level then select valves as follows:

.1 for all valves, select a valve with a MCPR rating equal to or greater than the pressure rating indicated on the drawings for each floor level,

.2 for clarity, even if a valve has an ASME Class rating, do not select a valve based on its Class to match any Class rating shown on the drawings.

3.3 Manual Valve Selection Based on Service and Pipe Material

.1 Select manual valve types based on the requirements of Table 1.

Table 1: Manual Valve Selection

Piping System	Pipe and Tube Material	Manual Valve Type
Domestic Cold Water Domestic Hot Water Domestic Recirculating Water Domestic Tempered Water	Copper	BV-1 GLV-1 GTV-1, GTV-2 BFV-1, BFV-2, BFV-5
	Stainless Steel	BV-2 BFV-2, BFV-4
	Ductile Iron	BFV-1, BFV-2, GTV-2
Domestic Cold Water (Industrial Occupancies only)	Galvanized steel	BV-1 GTV-2 BFV-1, BFV-3
Non-potable water	Copper	BV-1 GLV-1 GTV-1 BFV-1, BFV-2, BFV-5
	Stainless Steel	BV-2 BFV-2, BFV-4
	Galvanized Steel	BV-1, BV-2 GLV-1 GTV-1, GTV-2, GTVNP BFV-1, BFV-2, BFV-3, BFV-4

Table 1: Manual Valve Selection		
Piping System	Pipe and Tube Material	Manual Valve Type
Pumped Sanitary Drainage Pumped Storm Drainage	Copper	BV-1, BV-2
	Galvanized Steel	BV-1, BV-2

3.4 Check Valves

.1 Select check valves based on the requirements of Table 2.

Table 2: Check Valve Type Selection	
General use	Inline silent check
Domestic water heaters	Inline silent check
Temperature mixing valves	Inline silent check
Elevator sump pump discharge Clear waste sump pump discharge	Inline silent check or non-slam swing check
Sanitary sump pump discharge Storm sump pump discharge	Non-slam swing check valve

3.5 Double Regulating Valves Installation

.1 [][Where double regulating valves are used, supply one flow meter for double regulating and triple duty valves and turn over to operating staff during operations and maintenance training. Obtain and provide a copy to the owner of a signed receipt showing time, date, and name of recipient.]

.2 Consult with double regulating valve manufacturer to ensure correct valve selection. Balancing valves to be sized according to design flow rate.

.3 Size and select valves for flows as shown, based on at 6 kPa (2 ft) pressure drop across the valve in the fully open position, and in accordance with manufactures recommendation. Table 3 identifies the nominal valve size selection:

Table 3: Double Regulating Valve Nominal Sizing				
Valve Size NPS	Nominal Flow			
	Min.	Max.	Min.	Max.
	L/s	L/s	gpm	gpm
½	0.038	0.177	0.6	2.8
¾	0.126	0.379	2.0	6.0
1	0.246	0.631	3.9	10.0

1-¼	0.316	0.947	5.0	15.0
1-½	0.416	1.262	6.6	20.0
2	0.795	2.272	12.6	36.0
2-½	2.398	6.310	38.0	100.0
3	1.956	8.203	31.0	130.0
4	4.291	12.620	68.0	200.0
5	5.679	20.192	90.0	320.0
6	11.48	28.395	182.0	450.0
8	23.16	51.742	367.0	820.0
10	34.07	82.030	540.0	1300.0
12	60.58	94.650	960.0	1500.0

.4 Install double regulating valves with five pipe diameters of straight pipe on inlet side, two pipe diameters on outlet side and 10 pipe diameters from any pump.

.5 Install double regulating valves with ports facing horizontal or facing up. Do not install with ports facing down to prevent debris from falling and accumulating inside the ports.

3.6 Automatic Flow Balancing Valves Installation

.1 Select automatic flow balancing valves to suit the flow rates as shown at a pressure differential of 35 kPa (5 psig). Where the indicated flow rate falls between two catalogued values, select the lower flow rated valve.

End of Section

TESTING ADJUSTING AND BALANCING FOR PLUMBING
22 05 93

1 GENERAL

1.1 Scope

.1 Test, adjust, and balance ("TAB") plumbing systems installed, modified or extended as part of this work, including:

.1 domestic cold water booster pumps,

.2 domestic hot water systems,

.3 domestic hot water recirculation systems

1.2 Qualified Tradesperson

.1 Work to be performed by qualified, licensed and recognized firm with an established reputation in this field, using tradesperson holding applicable certificates of competency.

1.3 Accuracy

.1 Adjust systems until operating values are within the acceptance criteria stated for each system type. Where an acceptance criterion is not stated, balance the system so that measured values are within ±5% of design value.

.2 Measurement device accuracy:

Measurement	Application	Device	Accuracy
Liquid Flow	Piping	Installed meter	As per meter rating
Liquid Flow	Equipment	Differential Pressure and equipment data	See below
Temperature	Liquids	Digital Electronic Thermometer	± 0.2°C over 0 to +40°C
Temperature	Liquid	Digital Electronic Thermometer	± 0.4°C < 0°C and >+40°C
Pressure	Liquid, Gas, Steam	Bourbon type	± 1.0% of reading
RPM	Motor, fans	Chronometer tachometer	± 1.0% of reading
Voltage	All	Portable	± 2.5% of reading
Current	All	Portable clamp-on ammeter	± 2.5% of reading

1.4 Audit Verification

.1 After review of the draft TAB report by Consultant, the Consultant may at their sole discretion require re-measurement of TAB results on an audit sample rate of 5% of all measured equipment, at no cost extra to the Contract Price or change to project schedule.

.2 If audited results indicate a variance of more than 10% between the original reported value and the audit measured value for a piece of equipment, re-balance the audited device. If this excessive variance condition occurs at more than 25% of the number of audited equipment sample, re-balance the entire affected system at no cost extra to the Contract Price or change to project schedule.

1.5 Preparatory Work

.1 Review design drawings and specifications, shop drawings, interference drawings and other related documentation to become familiar with their intended performance.

.2 Carry out site visits during later stages of construction to ensure that arrangements for TAB are incorporated. Confirm proper placement of thermometer wells, test ports, pressure gauge cocks, and balancing valves.

.3 Commence TAB measurements when building is “closed in” and work is sufficiently advanced including;

.1 permanent heating is in operation,

.2 potable water systems have been flushed and cleaned.

1.6 Measurement Parameters

.1 Reporting units of measure:

Parameter	Unit	Abbreviation
Mass	kilogram	kg
Length	metre	m
Volume	litre	L
Volume flow rate	Litres per second	L/s
Time	seconds	s
Temperature	Celsius	°C
Pressure	kilopascal	kPa
Pump Head	metre	m
Pump Pressure	kilopascals	kPa
Mass flow rate	kg per second	kg/s
Heat flow rate	kilowatts	kW
Electrical Power	kilowatts	kW
Voltage	Volts	V
Electrical Current	amps	A
Rotation speed	Rotations per minute	RPM

2 PRODUCTS

2.1 Not used.

3 EXECUTION – DOMESTIC WATER DISTRIBUTION

3.1 Measurement Parameters

.1 The following measurement parameters identify the minimum requirements for inclusion in the TAB process:

.1 volume flow rate,

.2 temperature,

.3 pressure (gauge),

.4 equipment related;

(a) rotational speed (rpm),

(b) electrical power, kW

(c) voltage. V

(d) current, A,

.2 Measurement are required at and around equipment to establish fluid side performance of;

.1 domestic water heaters and heat exchangers.

.2 domestic water booster pumps,

.3 hot water recirculation pumps.

.3 Measurement are required to characterize system performance;

.1 water flowrates at plumbing fixtures,

.2 hot water recirculation flow rates.

3.2 General Requirements

.1 Use permanent water flow meters, temporary non-invasive flow meters, or metered fittings and pressure gauges to determine flow rates for system balance.

.2 Base flow balance flow rates on (in order of preference):

.1 permanent flow meters,

.2 temporary non-invasive flow meters,

.3 double regulating valves,

.4 differential pressure measurement across heat transfer elements, with flowrate determined from manufacturer's literature, or

3.3 Domestic Cold Water Booster Pump Test Procedure

.1 For new building;

.1 open only sufficient number of fixture outlets to cause a minimum pump flow condition, with only one booster pump operating at minimum speed. Record pump performance results.

.2 open sufficient number of fixture outlets to cause the design number of booster pumps to start and to run to maximum design pump speed. Record pump performance results.

.3 reduce the number of fixture outlets to cause the booster pumps to operate at approximately 50% of design flow rates. Record pump performance results.

.2 For installation of booster pumps in existing buildings;

.1 place pumps into service, and monitor pump performance under building load for a 24 hour period. Use a data-logger to monitor pump differential pressure and motor current. Alternatively, a building control system may be configured to collect this data.

3.4 Hot Water Recirculation Balancing Procedure

.1 Where circuit-balancing valves are used on hot water recirculation systems, adjust each valve to obtain the required design flow rate.

.2 Where pressure-independent flow regulating valves are used in a hot water recirculation system, for each valve;

.1 measure system static pressure at the closest service sink to the pressure-independent flow control valve where a pressure gauge may be added to the faucet outlet (“adjacent system inlet static pressure”), and record system static pressure at the at-test system operating condition,

.2 measure system static pressure at the inlet to the recirculating pump,

.3 verify model type and size of each pressure-independent flow regulating valve and record results in the TAB report. Include the following data for each valve:

(a) location of flow control valve (i.e. floor level, room reference),

(b) adjacent system inlet static pressure,

(c) recirculation pump inlet static pressure,

(d) calculated differential pressure estimate (excluding pipe friction losses),

(e) valve model and size, with flow rate at the calculated differential pressure.

3.5 Plumbing Fixtures Hot Water Test Procedure

.1 At each floor level, measure the cold and hot water static pressure at the outlet of any fixture that can have a pressure gauge attached to it.

.2 For plumbing fixtures with automatic hot water temperature or pressure control, test and set each fixture as follows:

.1 flow hot water from the fixture for a sufficient time to stabilize hot water temperature,

.2 if hot water temperature is greater or less than specified water supply temperature, adjust fixture to obtain required hot water outlet temperature,

.3 record adjusted temperature results for all fixtures.

.3 [][For sinks and lavatories, perform the following hot water time-to-delivery test;

.1 randomly select 10% of all fixtures, evenly distributed by type and over each floor, with selections approved by Consultant,

.2 do not select a fixture where it shares a portion of a hot water dead-leg pipe with another selected test fixture,

.3 allow each floor to be at rest (no water flow from plumbing fixtures) for a period of 24 hours prior to conducting the time-to-delivery test,

.4 at each fixture, run hot water (or tempered water for fixtures with blending valves) into a receptacle that has a bottom outlet, with the outlet sized to allow water to collect in and simultaneously drain from the receptacle. Record the time required for the hot water in the receptacle to stabilize at the expected water outlet temperature,

.5 after completion of the preceding test, measure the flow rate from the fixture using another receptacle and a stop-watch,

.6 record the time-to-delivery of design hot water temperature and measured flow rate for each selected fixture. Include the fixture type and room location of the fixture.

4 EXECUTION - EQUIPMENT TESTING

4.1 Performance Data

.1 Submit the following data as a minimum. If contractor's standard forms provide for additional data, also submit such additional data.

.2 Include nameplate data and as-tested results.

.3 Hot water heaters:

.1 manufacturer and model,

.2 heat output rating (kW),

.3 electric power input rating (kW),

.4 gas and fuel oil input flow rating,

.5 gas and fuel oil input pressure rating (minimum, maximum),

.6 gas pressure regulator inlet and outlet pressure,

.7 pressure rating (MAWP),

.8 pressure relief valve rating (pressure setpoint, heat rating, steam rating),

.9 heat performance:

(a) entering and leaving water temperature,

(b) entering and leaving water pressure,

(c) liquid flow rate (minimum, maximum),

(d) steam flow rate and pressure,

(e) calculated heat output rating at measured design water flow rate and measured temperatures.

.4 Hot water heat exchangers:

.1 manufacturer and type,

.2 inlet and outlet temperatures,

.3 pressure drop,

.4 design pressure rating (MAWP),

.5 heat performance:

(a) entering and leaving water temperature,

(b) entering and leaving water pressure,

(c) liquid flow rate (minimum, maximum),

(d) input steam flow rate and pressure (where applicable),

(e) calculated heat output rating at measured design water flow rate and measured temperatures.

.5 Pumps:

.1 manufacturer name,

.2 model or serial number,

.3 flow rate,

.4 developed pump head,

.5 RPM.

5 EXECUTION - MISCELLANEOUS

5.1 Balance Position Marking

.1 Mark the balance position of valves at the completion of the final testing:

.1 valves: self-adhesive label, placed on piping (insulated or not) adjacent to valve, neatly filled in with either % valve open, or number of valve turns to open.

.2 Additional requirements for circuit-balancing valves with test ports:

.1 remove valve handle or other protective device, and set memory stop to limit valve open travel. Replace valve handle or protective cover.

6 EXECUTION - REPORT PRESENTATION AND VERIFICATION

6.1 Required Reports

.1 Provide the following reports:

.1 Water balancing and equipment test report.

6.2 Record Keeping

.1 Keep records of trial and final balance and submit preliminary report as each system is completed.

.2 Do not submit the final TAB report until all audit verification re-measurements, and any required re-balancing, is completed to the satisfaction of Consultant.

6.3 Report Format

.1 Reports to incorporate approved standard forms, with values expressed in the same units as shown on Contract Documents.

.2 Include "as-built" system schematics, marked-up to show as-measured flow quantities and measurement points. Use as-built drawings and ventilating line diagrams for reference.

.3 Submit an electronic PDF copy of the draft TAB report for review by Consultant. Where a report page length is more than 20 pages, include bookmarks in the PDF document organizes by system number and/or name.

.4 After any revisions requested by Consultant have been made and final review accepted by Consultant, submit the final TAB report in the following formats:

.1 two (2) hard copies of the completed report, each with index tabs and bound in “D” ring binders,

.2 electronic file PDF copies by email or drop-box as coordinated with Owner and Consultant.

6.4 Completion

.1 Continue TAB until reports are approved.

.2 The Substantial Performance of the Mechanical Work will be considered reached when the initial Start-Up and Performance Testing report is accepted by the Consultant and in the opinion of the Consultant all systems have been satisfactorily installed, operated tested, balanced, and adjusted to meet the specified and intended performance.

.3 The substantial performance of the Work is not dependent upon alternate season testing.

.4 The total performance of the Work will not be considered reached until the alternate season testing and balancing is completed and the final report submitted has been reviewed by Consultant and accepted by the Owner.

END OF SECTION

Master revised: February 5, 2022

DOMESTIC WATER PIPING - COPPER
22 11 16.13

1 GENERAL

1.1 Scope

.1 Provide copper tube and fittings for potable domestic water piping systems for aboveground installations.

1.2 Related Sections

.1 Without limiting the scope of work or applicability of other specification sections, the work under this section directly integrates with or refers to the following specification sections:

.1	20 05 24	Welding and Brazing
.2	22 05 01	Plumbing Piping Systems – General Requirements
.3	22 05 23.13	General-duty Valves for Pluming Piping
.4	20 05 29	Common Hanger and Support Requirements for Piping

1.3 Definitions

.1 The following definitions apply to this specification section:

.1 ***Exposed areas***: include inside service rooms and above lay-in tile ceilings, but excludes: vertical and horizontal service shafts; above any other ceiling construction; and inside walls and partitions.

1.4 Applicable Codes and Standards

.1 Installation standards:

.1	Copper Development Association (CDA)	Copper Tube Handbook

.2 Product standards:

.1	ASME B16.15	Cast Bronze Threaded Fittings, Classes 125 and 250
.2	ASME B16.18	Cast Copper Alloy Solder Joint Pressure Fittings
.3	ASME B16.22	Wrought Copper and Copper Alloy Solder Joint Pressure Fittings
.4	ASME B16.24	Cast Copper Alloy Pipe Flanges and Flanged Fittings; Class 150, 300, 400, 600, 900, 1500, & 2500.
.5	ASME B16.50	Wrought Copper and Copper Alloy Braze-Joint Pressure Fittings
.6	ASTM A193	Standard Specification for Alloy-Steel and Stainless Steel Bolting Materials for High Temperature
.7	ASTM A194	Standard Specification for Carbon and Alloy Steel Nuts for Bolts for High Pressure or High Temperature Service, or Both
.8	ASTM B32	Standard Specification for Solder Metal
.9	ASTM B88	Standard Specification for Seamless Copper Water Tube
.10	ASTM B813	Standards Specification for Liquid and Paste Fluxes for Soldering of Copper and Copper Alloy Tube
.11	ASTM B828	Standard Practice for Making Capillary Joints by Soldering of Copper and Copper Alloy Tube and Fittings.
.12	AWS A5.8	Brazing Filler Metal.

.13	AWS A5.31	Specification for Fluxes for Brazing and Braze Welding
.14	AWS C3.4	Specification for Torch Brazing
.15	CSA B242	Groove and Shouldered Type Mechanical Couplings
.16	MSS SP-106	Cast Copper Alloy Flanges and Flanged Fittings, Class 125, 150 and 300

2 PRODUCTS

2.1 Copper Tube

.1 Hard drawn, type L.

.2 Listed to ASTM B88 and to have certification markings made by testing agency accredited by Standards Council of Canada.

2.2 Fittings

.1 Brass or bronze flanges and flanged fittings: to ASME B16.24.

.2 Brass or bronze threaded fittings: to ASME B16.15.

.3 Solder/brazed fittings: cast bronze to ASME B16.18, or wrought copper and bronze to ASME B16.22.

.4 Threaded fittings including unions to ASME B16.15, Class 250.

.5 Roll groove full flow standard radius cast bronze fittings for sizes NPS 2 1/2 and larger: to CSA B242

2.3 Joints

.1 Solder: 95:5 tin-antimony solder to ASTM B-32.

.2 Silver brazing alloy to AWS A5.8 classification BCUP-5.

Standard of Acceptance

- Handy Harman "SIL-FOS"
- All-State Welding Alloys "SILFLO 15"

.3 Flanges:

.1 Threaded end connection: flat face, cast copper alloy to ASME B16.24, class 150 and 300, NPT threaded,

.2 Brazed end connection: flat face, cast copper alloy to MSS SP-106, class 150 or 300.

.3 Dielectric flanges: to specification section 22 05 01.

.4 Studs and bolts: stainless steel to ASTM A193.

.5 Nuts: stainless steel type 316, to ASTM A194.

.4 Flange gaskets:

.1 Full flat-faced style to ANSI B16.21.

.2 Suitable for use in potable water service and listed to NSF/ANSI 61.

.3 Ethylene propylene diene monomer (EPDM);

(a) required working pressure: 1700 kPa (250 psi) at up to 95°C (203°F)

.4 Compressed mineral fibers bonded with nitrile (NBR);

(a) required working pressure: 2750 kPa (400 psi) at up to 95°C (203°F)

Standard of Acceptance

- American-Biltrite (EPDM) – fig. AB-576
- Durlon (NBR) – fig. 7910

.5 Roll grooved piping:

.1 Roll groove positive clamp gasketed couplings or roll groove flange adapters for copper piping to CSA B242.

Standard of Acceptance

- Victaulic - fig. 607
- Gruvlock
- Couplox
- Shurjoint

3 EXECUTION

3.1 Installation

.1 Refer to section 22 05 01 for piping design criteria and general requirements for piping installation.

.2 Install tubing close to building structure to minimize furring and conserve headroom. Group tubing and run parallel to walls and ceilings.

.3 Cut tube square, ream tube ends and clean tubing and tube ends before joint assembly.

.4 Before making solder or brazed joints, remove working parts of valves, clean inside of solder fittings and outside of mating pipe with emery paper and coat with applicable flux.

3.2 Pipe Supports

.1 Support piping and tubing in accordance with specification section 20 05 29 except as specified herein.

.2 Support horizontal copper tubing at intervals in accordance with Table 1:

Table 1:
Horizonal Pipe Support Spacing for
Copper Tube

Pipe Size NPS	Rod Diameter	Maximum Spacing
½	M10 (3/8 in)	1.5 m (5 ft)
3/4 to 1¼	M10 (3/8 in)	1.8 m (6 ft)
1½	M10 (3/8 in)	2.4 m (8 ft)
2	M10 (3/8 in)	2.4 m (8 ft)
2½	M12 (½ in)	3.0 m (10 ft)
3	M12 (½ in)	3.0 m (10 ft)
4	M16 (5/8 in)	3.0 m (10 ft)

.1 Support vertical pipe and tube risers;

.1 at the base (bottom) of the riser by a support that is independent of any adjacent horizontal pipe supports,

.2 at every other floor level with pipe riser clamps, but not to exceed a vertical spacing of more than 7.5 m (24.5 ft).

3.3 Class Rated Fittings

.1 Select ASME Class rated fittings and flanges in accordance with the following Table 2 for design pressure limits at coincident design temperature limits unless otherwise shown on drawings.

Table 2:
Pressure and Temperature Limits for Class Rated Fittings

Class	Maximum Design Pressure	Maximum Coincident Design Temperature
150	1720 (250 psi)	≤ 38°C (100°F)
150	1400 kPa (200 psi)	≤ 121°C (250°F)
300	3700 kPa (535 psi)	≤ 38°C (100°F)
300	3100 kPa (450 psi)	≤ 121°C (250°F)

3.4 Joints and Fittings

.1 Joints in tubing:

.1 NPS ½ to NPS 2:

(a) soldered.

.2 NPS 2-1/2 and larger:

(a) brazed, flanged or roll-grooved joints.

.2 Make solder joints in accordance with the recommendations of the CDA handbook.

.3 Make braze joints in accordance with specification section 20 05 24.

.4 Use manufactured fittings. Use of fabricated pulled-tee's is subject to approval by the local municipal authority for plumbing, and only brazed butt weld joints shall be used.

.5 For flange joints, select gasket materials in accordance with the following Table 3 so that gasket pressure and temperature both exceed the piping system design pressure and design temperature.

Table 3:
Flange Gasket Selection

Gasket Temperature Limit	Gasket Pressure Limit	Gasket Material	Gasket Thickness	Figure
95°C (203°F)	1720 kPa (250 psig)	EPDM	1.5 m (1/6 in)	A-B AB-576
	2750 kPa (400 psig)	NBR	1.5 m (1/6 in)	Durlon 7910

3.5 Groove Joint Piping

.1 Make pipe ends clean and free of indentations, projections and roll marks, between the end of the pipe and the groove.

.2 Verify gasket style and material grade with supplier for use with intended service.

.3 Provide for manufacturers' service representative to conduct on-site training prior to piping rough-in and installation.

.4 Arrange and pay for a factory-trained representative to periodically visit the place of the Work and review the installation for compliance with the manufacturer's installation instructions.

.1 Correct any identified deficiencies.

.2 Correct any product that has been examined and which has not met the visual inspection criteria for proper installation

.3 Arrange and pay for re-examination by the manufacturer's representative after deficiencies have been corrected and/or materials replaced to verify the corrected installation prior to filling the system for testing or placing into service.

3.6 Equipment Connections

.1 Make pipe connections to equipment as follows.

.1 NPS 2 and smaller: threaded fittings.

.2 NPS 2 ½ and larger:

(a) flanged connections, or

(b) grooved end where equipment has compatible factory-prepared grooved ends.

.2 Where connection is made to equipment with a threaded fitting, provide a union between the isolation valve and the equipment connection.

.3 For threaded flanges, provide a sweat x NPT adaptor; do not thread tubing directly.

.4 Provide a dielectric union or dielectric flange in accordance with specification section 22 05 01 when connecting potable water piping to equipment with carbon steel connections. Dielectric fittings are not required when connecting to equipment with stainless steel connections.

3.7 Valves

.1 Provide valves in accordance with specification section 22 05 23.13.

.1 Isolate equipment, fixtures and branches with gate, ball or butterfly valves.

.2 Use globe, DRVs, ball or butterfly valves for throttling service.

3.8 Pressure Testing, Flushing and Balancing

.1 Pressure test, flush and balance water systems to specification section 22 05 01.

END OF SECTION

Master revised: 7 March 2023

DOMESTIC WATER PIPING SPECIALTIES
22 11 19

1 GENERAL

1.1 Scope

.1 Provide domestic water piping specialties and accessories.

1.2 Applicable Codes and Standards

.1 Product standards:

.1	ANSI/ASSE 1010	Water Hammer Arrestors
.2	CSA-B125	Plumbing Fittings.
.3	CSA B.64.1.1	Atmospheric Vacuum Breakers (AVB)
.4	CSA B.64.1.2	Pressure Vacuum Breakers (PVB)
.5	CSA B64.2.1	Hose Connection Vacuum Breaker (HCVB) with Manual Drain Feature
.6	CSA B64.4	Backflow Preventers, Reduced Pressure Principle (RP)
.7	CSA B64.5	Backflow Preventers, Double Check Valve Type (DCVA)
.8	CSA B64.10	Manual for the Selection and Installation of Backflow Prevention Devices/Manual for the Maintenance and Field Testing of Backflow Prevention Devices
.9	CSA B137.6	Chlorinated Polyvinylchloride (CPVC) Pipe, Tubing, and Fittings for Hot- and Cold-Water Distribution Systems
.10	CSA C22.2 No. 14	Industrial Control Equipment
.11	CSA C22.2 No. 94.1	Enclosures for Electrical Equipment, Non-Environmental Considerations
.12	NSF/ANSI/CAN 61	Drinking Water System Components – Health Effects
.13	NSF/ANSI/CAN 372	Drinking Water System Components – Lead Content
.14	PDI-WH201	Plumbing and Drainage Institute - Standard Water Hammer Arresters

1.3 Submittals

.1 Submit product data sheets for materials specified herein.

2 PRODUCTS

2.1 Dielectric Fittings

.1 Dielectric unions – NPS 2 and under:

.1 body and union nut material selected to suit connecting various dissimilar piping materials, including all pair combinations of copper, stainless steel, carbon steel and galvanized steel.

.2 flat-face union design,

.3 tail-piece with FNPT ends with thermobaked epoxy coating, and Teflon shoulder gasket,

.4 head-piece with integral O-ring, with threaded or soldered pipe ends.

.5 union nut,

.6 pressure rating: Class 3000.

.7 dielectric coating resistance rating: minimum 500 V/mil thickness.

Standard of Acceptance

° Hart Industrial Unions - fig. D-3136 series

.2 Dielectric insulating flanges – NPS 2-1/2 to NPS 4;

.1 for connecting copper to galvanized steel piping.

.2 Ductile iron flanges, Class 125 to ANSI B16.42.

.3 copper tailpiece for soldered joint,

.4 FNPT thread to AMSE B1.20.1 x copper solder joint,

.5 BUNA-N gasket,

.6 lead free materials to NSF 61+G.

.7 maximum design pressure: 1200 kPa (175 psi)

.8 maximum operating temperature: 82°C (180°F)

Standard of Acceptance

° Watts No. LF3100

.3 Dielectric insulated flange – single face with copper tube tailpiece – NPS 2 to NPS 6;

.1 for connecting copper to galvanized steel piping,

.2 Van Stone style carbon steel flange with copper tailpiece with flared end,

.3 carbon steel flange, Class 150 to ANSI B16.5, with powder coated finish.

.4 copper tailpiece with rolled flange face-end, and EPDM insulting gasket isolating the copper tube from the steel flange,

.5 copper tailpiece end connection: rolled groove or sweat.

Standard of Acceptance

° CTS Flange Canada - fig. CTS Copper Flange Adaptor

.4 Dielectric flange isolating gasket kits for flanges NPS 6 and over:

.1 for use with ASME Class 150 and 300 dimensional flanges.

.2 suitable for connecting various dissimilar piping materials, including all pair combinations of copper, stainless steel, carbon steel and galvanized steel.

.3 compatible with pressure and temperature service,

.4 gasket: BUNA-N or EPDM gasket seals compatible with potable water,

.5 flange bolt insulating sleeves: non-conductive isolating bolt sleeve and washer assemblies to prevent metal-to-metal contact between flange bolt and flange.

Standard of Acceptance

° Advance Products and Systems

2.2 Water Hammer Arresters

.1 Stainless steel construction with precharged air chamber of nesting bellows.

.2 Selected in accordance with Plumbing and Drainage Institute Standard PD1-WH201.

.3 Listed to ANSI/ASSE 1010

Standard of Acceptance

- Jay R. Smith - fig. Hydrotrol 5000 series
- Mifab - fig. WHB series
- Zurn - fig. Shocktrol Z-1700 series]

2.3 Trap Seal Primers

.1 Electrically operated manifold units – Type A:

.1 factory assembled in 1.5 mm (16 ga) recessed metal cabinet with hinged stainless steel lockable access door,

.2 atmospheric vacuum breaker,

.3 24 hr controller with manual over ride switch,

.4 120 Volt solenoid valve,

.5 NPS ¾ or NPS ½ valved inlet water connection,

.6 calibrated water distribution manifold,

.7 NPS ½ outlet compression fittings,

.8 power supply: 120 VAC.

Standard of Acceptance

- Precision Plumbing Products - fig PT-3 thru PT-30
- Mifab - fig.MI-100

.2 Electrically operated manifold units – Type B:

.1 Same as Type A electronic trap seal primer, except distribution manifold is shipped loose for field installation external to the trap primer cabinet.

2.4 Back-flow Preventers - Reduced Pressure Principle (“RP”)

.1 Listed to CSA B.64.4.

.2 Type: two independent check valves with intermediate relief valve and drain port,

.3 NPS ½ to 2:

.1 quarter turn full port resilient seated ball valves on inlet and discharge connections,

.2 bronze inlet strainer,

.3 four (4) ball-valve test cocks,

.4 air gap drain,

.5 listed to NSF/ANSI/CAN 61 including /G or NSF/ANSI/CAN 372.

.6 required MCPR: 1200 kPa (175 psi) at 82°C (180°F).

Standard of Acceptance

- Watts - fig. LF909QT
- Apollo - fig. RPLF4A

.4 NPS 2 to 10:

.1 butterfly or OS&Y resilient seated gate valves on inlet and discharge connections,

.2 four (4) ball-valve test cocks,

.3 air gap drain body,

.4 listed to NSF/ANSI/CAN 61 including /G or NSF/ANSI/CAN 372.

.5 required MCPR: 1200 kPa (175 psi) at 60°C (140°F).

Standard of Acceptance

- Watts - fig. LF909-OSY
- Apollo - fig. RPDA40
- Cla-val Company - fig. RP-1EX

2.5 Back-flow Preventers – Double Check Valve Assemblies ("DCVA")

.1 Listed to CSA B64.5.

.2 Type: double check valve backflow preventers, with two positive seating spring-loaded check valves.

.3 NPS ½ to 2:

.1 bronze body, replaceable seats and seat discs,

.2 quarter turn full port resilient seated ball valves on inlet and discharge connections,

.3 bronze inlet strainer,

.4 four (4) ball-valve test cocks,

.5 listed to NSF/ANSI/CAN 61 including /G or NSF/ANSI/CAN 372.

.6 required MCPR: 1200 kPa (175 psi) at 82°C (180°F).

Standard of Acceptance

- Watts - fig. LF007QT series
- Apollo - fig. DCLF4A series
-

.4 NPS 2-1/2 to NPS 10:

.1 T304 stainless steel body and stainless steel, bronze and EPDM trim,

.2 OS&Y resilient seated gate valves, or butterfly valves on inlet and discharge connections,

.3 four (4) ball-valve test cocks,

.4 listed to NSF/ANSI/CAN 61 including /G or NSF/ANSI/CAN 372.

.5 required MCPR: 1200 kPa (175 psi) at 60°C (140°F).

Standard of Acceptance

- Watts - fig. LF757, LF757N
- Apollo - fig. DCLF4A series (NPS 2-1/2 to 8 only).

2.6 Vacuum Breakers

.1 Atmospheric type ("AVB"):

.1 listed to CSA B.64.1.1.

.2 NPS ¼ to 3:

(a) atmospheric type (AVB), with single float and disc, and

(b) large atmospheric port.

Standard of Acceptance

- Watts - fig. 288A
- Cash Acme - fig. V-101

.2 Pressure type ("PVB"):

.1 listed to CSA B.64.1.2.

.2 NPS ½ to 2:

(a) pressure type (PVB) with spring loaded single float and disc,

(b) independent first check, shut off valves, and ball type test cocks.

Standard of Acceptance

- Watts - fig. 800

.3 Hose connection type ("HCVB"):

.1 listed to CSA B.64.2

.2 NPS ¾:

(a) atmospheric vent vacuum breaker with non-removable single check,

(b) hose connection,

(c) drainage feature to prevent freezing,

Standard of Acceptance

- Watts - fig. 8
- Cash Acme – fig. V-3

2.7 Backflow Preventer Valve Cabinets

.1 Recessed mount, [stainless steel with No. 4 satin polish finish][primed steel for field painting];

.2 1.2 mm (16ga) welded one piece tub with adjustable face frame,

.3 Solid door with rounded safety cornered door, continuous exposed piano hinge and cam latch,

.4 Integral 50mm (2") high drain pan at bottom of tub, sloping to an NPT 1" center drain outlet,

.5 Hole punching for piping penetrations as shown.

.6 Cabinet size:

.1 single valve : 826mm x 762mm x 152mm (32 ½" x 30" x 6") deep

.2 double valve: 826mm x 1219mm x 152mm (32 ½" x 48" x 6") deep

Standard of Acceptance

- Acudor - fig. BFP-1 for single valves
- Acudor - fig. BFP-2 for double valves

2.8 Pressure Reducing Valves – Direct Acting

.1 Listed to NSF/ANSI/CAN 61 including /G or NSF/ANSI/CAN 372.

.2 Regulator:

.1 self-contained type, single renewable nickel alloy seat and resilient disc.

.2 body lead free brass or bronze body,

.3 diaphragm: BUNA-N,

.4 required MCPR: 2060 kPa (300 psi) at 49°C (120°F).

.5 maintain outlet pressure with varying flow between no-flow and maximum flow rate.

.6 maximum flow rates and pressure reduction: as shown on drawings.

.3 Accessories:

.1 close coupled bronze strainer with stainless steel screen.

Standard of Acceptance

- Watts
- Cash Acme Valve
- Singer Valve
- Leslie
- Victaulic Bermad

2.9 Pressure Reducing Valves – Pilot Controlled

.1 General:

.1 main body pressure reducing valve with external pilot control regulator and low-flow bypass regulator,

.2 maintain outlet pressure with varying flow between no-flow and maximum flow rate.

.3 maximum flow rates and pressure reduction: as shown on drawings,

.4 operating temperature: 60°C (140°F)

.5 pressure rating: 2060 kPa (300 psi),

.6 listed to NSF/ANSI/CAN 61 including /G or NSF/ANSI/CAN 372.

Standard of Acceptance

- Watts - fig. LFF115 series
- Singer Valve – fig. 206-PR series
- Victaulic/Bermac – fig. 386 or 720 series

.2 Main regulator:

.1 ductile iron body to ASTM A536,

.2 internal coatings: NSF listed epoxy lining,

.3 stainless steel trim,

.4 diaphragm: EPDM,

.5 strainer: none.

.3 Pilot regulator:

.1 self-contained type, single renewable nickel alloy seat and resilient disc.

.2 body: lead free brass or bronze,

.3 diaphragm: suitable for 82°C (180°F) service,

.4 strainer: close coupled bronze strainer with stainless steel screen.

.4 Low-flow bypass regulator:

.1 direct-acting type pressure regulator,

.2 flow rate: for no-flow up to 10% of main regulator maximum flow rate.

.3 pressure setpoint: not more than 70 kPa (10 psi) above main regulator setpoint.

.4 self-contained type, single renewable nickel alloy seat and resilient disc.

.5 body: lead free brass or bronze,

.6 diaphragm: suitable for 82°C (180°F) service,

.7 strainer: none,

.8 bypass valve may be supplied separately for field installation in parallel to the main regulator.

.5 External control tubing:

.1 pressure sensing tubing: stainless steel or copper,

.2 adjustable closing speed device,

.3 adjustable opening speed device,

.4 strainer.

.6 Accessories:

.1 inlet and outlet pressure gauges.

2.10 Pressure Relief Valves

.1 Brass body to ASME Section IV.

.2 Preset pressure settings: 515, 700, 860 and 1030 kPa (75, 100, 125 and 150 psi).

.3 listed to NSF/ANSI/CAN 61 including /G or NSF/ANSI/CAN 372.

Standard of Acceptance

° Watts - fig. LF3L

2.11 Strainers

.1 NPS ½ to NPS 3:

.1 wye pattern, bronze body, solid retainer cap with gasket, and NPT threaded or soldered end,

.2 type 304 stainless steel baskets: 1.2 mm (3/64 in) diameter perforations,

.3 required MCPR: 2750 kPa (400 psi) at 93°C (200°F)

.4 listed to NSF/ANSI/CAN 61 including /G or NSF/ANSI/CAN 372.

Standard of Acceptance

° Watts - fig. LF777, LFS777
° Zurn - fig. YBXL
° Cash Acme

.2 NPS 4 to NPS 10:

.1 simplex basket strainer, cast iron body, bolted screen retainer cover, plugged drain/blowdown NPT connection, ASME Class 125 flat faced flange ends,

.2 type 304 stainless steel baskets: 3.2 mm (⅛ in) diameter perforations,

.3 required MCPR: 1370 kPa (200 psi) at 66°C (150°F),

.4 listed to NSF/ANSI/CAN 61 including /G or NSF/ANSI/CAN 372.

Standard of Acceptance

° Watts - fig. LF98FB-CIB

3 EXECUTION

3.1 Dielectric Fittings

.1 Provide dielectric fittings at the connection point between the following combinations of dissimilar metals:

.1 copper and stainless steel,

.2 copper and carbon steel or galvanized steel,

.3 stainless steel and carbon steel or galvanized steel.

.2 Brass or bronze valves are not to be used for the purpose of a dielectric fitting on potable water systems and non-potable water systems. Where a brass or bronze valve is installed at the connection point between carbon steel/galvanized steel pipe and copper tube systems, provide a dielectric fitting on either side of the valve.

.3 Where potable water connects to a backflow protection device for make-up water to an HVAC piping system or process piping system, install the dielectric fitting at either side of the backflow preventer.

3.2 Water Hammer Arresters

.1 Select, supply and install water hammer arrestors in accordance with PDI-WH 201 on branch supplies to each fixture or group of fixtures.

.2 In addition, provide water hammer arrestors on branch supplies to each piece of owner's process equipment, of the size as shown.

3.3 Trap Seal Primers

.1 Electronic manifolds:

.1 Install trap seal primer panels in the locations as shown on drawings to serve individual or groups of floor drains and/or hub drains.

.2 120V/1ph/60 Hz power supply will be brought to electric manifolded units under Division 26 and connected under Division 22.

.3 For Type B trap primer unit, pipe the outlet of the primer unit in type L hard-drawn copper down through the floor slab and connect to the trap primer distribution manifold located in ceiling space below.

.2 Trap primer tubing:

.1 Use soft annealed copper tube to connect trap primer distribution manifold to floor drains and/or funnel drains.

3.4 Back-Flow Preventers and Vacuum Breakers

.1 Provide back-flow preventers and vacuum breakers in accordance with CSA B64.10.

.2 Install backflow preventers horizontally, in accordance with manufacturer's recommendations, but not less than 750 mm (30 in.) and not greater than 1500 mm (59 in.) above the floor level, or a fixed work platform, in front of the valve.

.3 Install pressure vacuum breakers not more than 1500 mm (56 in.) above the floor level, or a fixed work platform, in front of the valve.

.1 exception: where the pipe connection to the protected fixture or equipment is higher than 1500 mm (56 in/) above the floor, locate the pressure vacuum breaker at an elevation just high enough so that the outlet pipe to the fixture/equipment does not rise above the vacuum breaker.

.4 Pipe relief ports and air vents from backflow preventer, with an air gap, to nearest floor/hub drain or service sink using hard-drawing DWV copper tube.

.5 Position backflow preventers and pressure vacuum breakers so that test ports are accessible.

.6 Provide cabinets for backflow preventers as shown.

3.5 Additional Requirements for Reduced Pressure Backflow Preventers

.1 For reduced pressure type (RP) backflow preventers, install an inline spring-loaded disc or ball type check valve with threaded ends, within 300 mm (12 in.) of the inlet connection to the RP backflow preventer. Provide a pipe union on the upstream side of this check valve.

3.6 Pressure-Reducing Valves

.1 Provide direct-acting and pilot-acting pressure regulators as shown. For high-flow / low-flow stations, provide a pilot-operated regulator for the high-flow range and a direct acting regulator for the low-flow range.

.2 Install pressure-reducing valves ("PRV") with upstream and downstream shut-off valve and unions and provide a 115 mm (4½ in) pressure gauge immediately downstream of the PRV.

.3 For high-flow/low-flow parallel PRV arrangements, install the high-flow valve in the pipe main run and the low-flow valve in the offset run. Set the low-flow PRV setpoint to be 35 to 70 kPa (5 to 10 psi) greater than the high-flow PRV setpoint.

3.7 Pressure Relief Valves

.1 Provide pressure relief valves as follows:

.1 after each pressure reducing valve,

.2 after each backflow preventer, and

.3 where shown on drawings.

.2 Select relief valve setpoint to be not more than the design pressure of the piping system.

3.8 Strainers

.1 Install with sufficient space to remove baskets.

.2 Provide a valved blow-down drain line on NPS 4 to NPS 10 basket strainers, and pipe blow-down line in hard type L copper tube and terminate over floor drain, hub drain or trench drain.

END OF SECTION

SANITARY WASTE AND VENT PIPING – CAST IRON AND COPPER
22 13 16.13

1 GENERAL

1.1 Scope

.1 Provide cast iron pipe and fittings and/or copper tube and fittings for sanitary soil and waste drain and vent piping, for aboveground and buried services.

.2 Provide PVC-DWV piping for urinal fixture drains and a portion of the fixture vent piping.

.1 For clarity, the use of PVC DWV piping under this specification section is restricted to this purpose.

1.2 Related Sections

.1 Without limiting the scope of work or applicability of other specification sections, the work under this section directly integrates with or refers to the following specification sections:

.1 20 05 25 Excavation and Backfilling

.2 20 05 29 Common Hanger and Support Requirements for Piping

1.3 Applicable Codes and Standards

.1 Installation standards and codes:

.1 Cast Iron Soil Pipe Institute (CISPI) Technical Manual

.2 Product standards:

.1 ASME B16.23 Cast Copper Alloy Solder Joint Drainage Fittings: DWV

.2 ASME B16.29 Wrought Copper and Wrought Copper Alloy Solder-Joint Drainage Fittings-DWV

.3 ASTM B32 Standard Specification for Solder Metal

.4 ASTM B306 Standard Specification for Copper Drainage Tube (DWV)

.5 ASTM C564 Standard Specification for Rubber Gaskets for Cast Iron Soil Pipe and Fittings.

.6 ASTM C1540 Standard Specification for Heavy Duty Shielded Couplings Joining Hubless Cast Iron Soil Pipe and Fittings.

.7 ASTM B828 Standard Practice for Making Capillary Joints by Soldering of Copper and Copper Alloy Tube and Fittings.

.8 CSA B70 Cast Iron Soil Pipe, Fittings, and Means of Joining

.9 CSA-B125 Plumbing Fittings.

.10 CSA B158.1 Cast Brass Solder Joint Drainage, Waste, and Vent Fittings

.11 CSA B602 Mechanical Couplings for Drain, Waste, and Vent Pipe and Sewer Pipe.

2 PRODUCTS

2.1 Copper DWV Pipe and Fittings

.1 Application: inside of buildings only. Do not use for buried drain or vent.

.2 Pipe:

.1 copper DWV tube to ASTM B306

.2 certification markings made by testing agency accredited by Standards Council of Canada.

.3 Fittings:

.1 copper or copper alloy to ASME B16.23, or ASME B16.29.

.4 Solder

.1 tin-antimony 95/5 to ASTM B32 alloy Sb5.

2.2 Cast Iron DWV Pipe and Fittings

.1 Application: inside of buildings and buried drain and vent.

.2 Pipe and fittings:

.1 cast to CSA B70,

.2 with heavy bituminous coating for buried service.

.3 riser fittings with integral riser support ring for hub-less piping installed in vertical risers.

.3 Joints above ground:

.1 Plain end made up using mechanical sleeve joints to CSA B602 and ASTM C1540 with neoprene or butyl rubber compression gaskets to ASTM C564, with stainless steel sleeve and not less than four stainless steel drive clamps with stainless steel worms.

.2 Hub and spigot made up neoprene gasket to ASTM C564 and lubricating compound.

2.3 PVC DWV Pipe and Fittings

.1 Application:

.1 Restricted to fixture drain piping and partial vent pipe for urinals.

.2 Pipe and fittings:

.1 PVC pipe and fittings to CSA-B181.2,

.2 flame spread rating (“FSR”) of not more than 25 when tested to ULC-S102.2,

.3 smoke developed rating (“SDR”) of not more than 50 when tested to ULC-S102.2.

.4 materials marked for CSA B181.2 and ULC-S102.2.

Standard of Acceptance

- IPEX -“System XFR 15-50”

.3 Joint cement:

.1 one-step CSA listed cement for pipe sizes NPS 1½ to NPS 6.

.2 IPS primer Type P-70 and Heavy Bodied IPS Cement Type 711 for pipe sizes larger than NPS 6.

.3 Volatile Organic Content: maximum 510 g/L.

3 EXECUTION

3.1 Installation General

.1 Install soil, waste and vent piping in accordance with the requirements of the plumbing code applicable at the project location. Except as otherwise shown, venting of fixtures may use any method permitted in the plumbing code.

.2 Install suspended piping to grade, parallel and close to walls and ceilings to conserve headroom and space.

.3 Install piping close to building structure to minimize furring. Group piping and run parallel to walls and ceilings.

3.2 Cast Iron Piping

.1 Install cast iron drainage piping in accordance with Cast Iron Soil Pipe and Fittings (CISPF) Technical Manual.

.2 Lay buried piping in bedding prepared in accordance with specification section 20 05 25. Support piping on 150 mm (6 in.) thick bedding material, shaped to accommodate hubs and fittings, to line and grade as shown. Backfill with cover material to 300 mm above top of pipe or to underside of floor slab whichever is less.

.3 Assemble and tighten mechanical sleeve joints to coupling manufacturers recommended torque value with torque wrench.

.4 Install cast iron hub-and-spigot joints with neoprene compression gasket and lubrication in accordance with manufacturer requirements.

.5 Provide thrust restraints consisting of pipe clamps and restraint rods installed across tees, elbows, and blind plugs (cleanouts), for cast iron drainage piping NPS 5 and larger.

.6 Provide sway braces on all horizontal piping where the hanger length is greater than 450 mm (18 in) measured from the top of the pipe to the structure connection point, as follows:

.1 transverse brace at 12 m (40 ft) intervals,

.2 longitudinal brace at 24 m (80 ft) intervals,

.3 a transverse brace of one pipe section may act as a longitudinal brace for a second pipe section connected perpendicular to the first section, provided the brace is located within 600 mm (24 in) of the connection.

.4 tor clarity, these braces are required even where seismic restraint is not required.

3.3 Copper Tubing

.1 Cut copper tube square, ream tube ends and clean tubing and tube ends before joint assembly.

.2 Before assembling solder joints, clean inside of solder fittings and outside of mating pipe with emery paper and coat with flux.

.3 Solder joints in copper pipe with blow torch or oxy-acetylene flame.

3.4 Pipe Supports

.1 Support piping in accordance with specification section 20 05 29 except as specified herein.

.2 Support horizontal copper DWV tubing in accordance with Table 1A:

Table 1A: Horizonal Pipe Support Spacing for Copper Tube		
Pipe Size NPS	Rod Diameter	Maximum Spacing
½	M10 (3/8 in)	1.5 m (5 ft)
3/4 to 1¼	M10 (3/8 in)	1.8 m (6 ft)
1½	M10 (3/8 in)	2.4 m (8 ft)
2	M10 (3/8 in)	2.4 m (8 ft)
2½	M12 (½ in)	3.0 m (10 ft)
3	M12 (½ in)	3.0 m (10 ft)
4	M16 (5/8 in)	3.0 m (10 ft)

.3 Support horizontal cast iron DWV piping in accordance with Table 1B and as follows;

.1 one pipe support for each end of the pipe, located at or within 150 mm (6 in) of each hub or mechanical joint,

.2 for mechanical joints, if the pipe length between adjacent fittings is 300 mm (12 in) or less, reduce the support spacing to a maximum of 1000 mm (39 in),

.3 where multiple joints occur within a 1000 mm (39 in) developed pipe length;

(a) support may be reduced to every other hub or mechanical joint, or

(b) where the pipe run is made of multiple fittings connected end-to-end, provide a 1.6 mm (16 ga) galvanized steel half sleeve underneath the pipe and fittings, and support the sleeve with a support at each end of the sleeve.

Table 1B: Horizontal Pipe Support Spacing for Cast Iron DWV Piping			
Pipe Size NPS	Maximum Spacing	Clevis Hanger: Minimum Rod Diameter	MJ Hanger: Minimum Rod Diameter
1-1/2	3 m (9.8 ft)	---	M10 (3/8 in)
2	3 m (9.8 ft)	---	M10 (3/8 in)
3 to 4	3 m (9.8 ft)	M10 (3/8 in)	M10 (3/8 in)
6	3 m (9.8 ft)	M12 (1/2 in.)	M12 (1/2 in.)
8 to 12	3 m (9.8 ft)	M16 (5/8 in)	---
15	3 m (9.8 ft)	M20 (3/4 in)	---

.4 Support vertical pipe and tube risers at the base (bottom) of the riser and as follows:

.1 for cast iron drain and vent piping,

(a) support piping at every floor level with a pipe clamp, arranged so that the pipe clamp is above the pipe section center of gravity,

(b) support the pipe below a hub, or support the pipe with a riser fitting for hub-less joints.

(c) support the base of a riser at a fitting hub, or for mechanical joints support the riser pipe at a riser fitting,

(d) for pipe sizes NPS 5 and larger, provide sway braces at the base support to limit movement in both horizontal directions.

.2 for other piping, support piping at every other floor level with pipe riser clamps,

.3 for all piping and tubing, do not exceed a vertical spacing of more than 7.5 m (24.5 ft),

.4 in addition, for cast iron drainage piping provide lateral guides;

(a) at the base and top of the pipe riser,

(b) and at every 9 m (30 ft) except where the pipe riser clamp is restrained to prevent lateral movement.

3.5 Special Requirements for Urinals

.1 Use cast iron DWV piping or PVC DWV piping for the following sections of the drainage piping and venting systems for all urinals (do not use copper tube or pipe):

.1 for the fixture drain between the urinal trap outlet and the connection to another part of the drainage system, other than drainage piping that only serves urinals,

.2 for the portion of the vent pipe that vents one or more urinals between the connection to the fixture drain and up to a height not less than the flood level rim of the urinal,

.3 for horizontal drains serving only multiple urinals, from the fixture drain and the connection to another part of the drainage system conveying soil or waste from plumbing fixtures other than urinals.

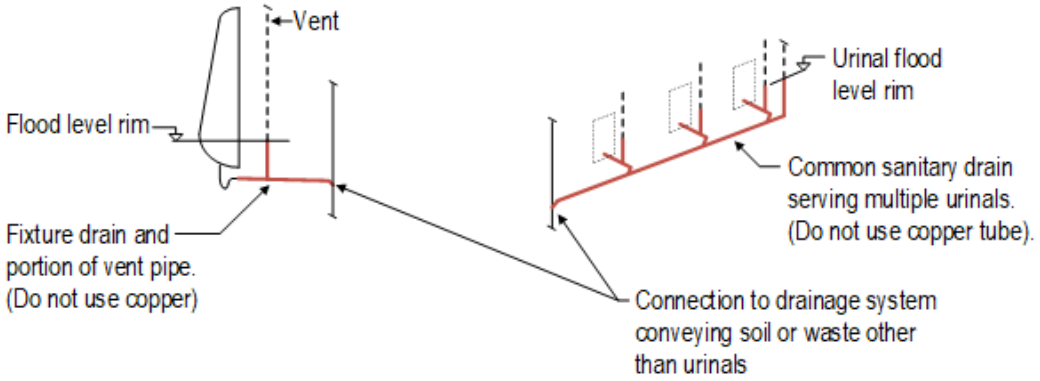

Figure 1: Prohibited use of copper tube

3.6 Testing

.1 Test drainage piping in accordance with the requirements of the plumbing code applicable at the project location.

.2 Test before piping is concealed.

.3 Cut-out and replace leaking soldered fittings, remake joints in cast iron piping, and retest.

END OF SECTION

Master revised: 18 March 2024

SANITARY WASTE AND VENT PIPING - PVC
22 13 16.16

1.1 Scope

.1 Provide PVC pipe and fittings for sanitary soil and waste drain and vent piping (“DWV”), for drainage services with a maximum continuous operating temperature of 60℃ (140°F) or less.

.2 Limitations for use:

.1 do not use PVC DWV piping in the following locations:

(a) in vertical services spaces,

(b) for drain piping receiving waste water at temperatures above 60°C (140°F), and

(c) as otherwise shown.

1.2 Definitions

.1 The following definitions apply to this section and referenced sections:

.1 ***Vertical service space:*** means a shaft that is oriented essentially vertically, extends through two or more floors, and that is provided in a building to facilitate the installation of building services.

1.3 Related Sections

.1 Without limiting the scope of work or applicability of other specification sections, the work under this section directly integrates with or refers to the following specification sections:

.1	20 05 25	Excavation and Backfilling
.2	20 05 63	Safety Bollards and Machine Guards
.3	22 13 16.13	Sanitary Waste and Vent Piping – Cast Iron and Copper
.4	20 05 29	Common Hanger and Support Requirements for Piping

1.4 Applicable Codes and Standards

.1 Product standards:

.1	CSA B181.2	PVC Drain Waste and Vent Pipe and Fittings from CSA B 1800 Plastic Non-Pressure Pipe Compendium
.2	ULC-S102.2	Standard Method of Test for Surface Burning Characteristics of Flooring, Floor Covering and Miscellaneous Materials
.3	ULC-S115	Fire Tests of Fire Stop Systems

1.5 Submittals

.1 Shop drawings:

.1 submit shop drawings showing for firestop systems as applicable to each piping penetration of a fire separation, and include:

(a) firestop materials data sheets,

(b) ULC listing details of construction for each applicable firestop assembly,

(c) Firestop manufacturer installation instructions for each applicable firestop assembly type.

(d) Instructions on where each firestop assembly type is to be used.

1.6 LEED requirements

.1 CaGBC LEED Canada v4 requirements:

.1 EQ Credit Adhesives and Sealants:

(a) PVC pipe adhesive with maximum VOC of 510 g/L in accordance with California South Coast Air Quality Management District, rule #1168, amendment date of January 7, 2005.

2 PRODUCTS

2.1 General

.1 PVC pipe, fittings, and jointing system to be a coordinated package supplied by pipe manufacturer with written installation instructions.

2.1 Aboveground Pipe and Fittings ("PVC Type XFR"):

.1 Listed to CSA B181.2,

.2 Flame spread rating ("FSR") of not more than 25 when tested to ULC-S102.2,

.3 Smoke developed rating ("SDR") of not more than 50 when tested to ULC-S102.2.

.4 Materials marked for CSA B181.2 and ULC-S102.2.

Standard of Acceptance

° IPEX - fig. XFR DWV

2.2 Joint Cement

.1 Volatile Organic Content: maximum 510 g/L.

.2 Pipe sizes NPS 1-1/2 to NPS 6:

.1 one-step (primer optional)

Standard of Acceptance

° IPEX - fig. System 15/System XFR One-Step PVC Cement

.3 Pipe sizes NPS 8 to NPS 12:

.1 Two-step primer and cement.

Standard of Acceptance

° IPEX - fig. System 15/System XFR Two-Step PVC Primer and Cement

.4 Pipe sizes NPS 14 and larger:

.1 pipe manufacturer specific PVC cement with primer.

Standard of Acceptance

° IPEX - fig. Xirtec19 PVC Cement.

2.3 Firestops

.1 Firestop system for combustible piping with through-penetrations of horizontal and vertical fire separations, having a fire resistance equal to or greater than the fire resistance rating of the affected fire separation.

.2 Listed to ULC S115:

.1 "F" rating of not less than the fire resistance rating of the appliable fire separation,

.2 "F" rating with a pressure differential of 50 Pa (0.20 in.w.c) for buildings more than 3 storeys in building height,

.3 "FT" rating of not less than the fire resistance rating of the appliable fire separation or firewall separating a parking garage from the rest of the building, or where passing through a horizontal service space horizontal fire separation.

Standard of Acceptance

- Hilti Canada
- 3M Canada

3 EXECUTION

3.1 Restrictions on Use

.1 Do not install PVC piping in vertical service spaces.

.2 Where PVC piping transitions to noncombustible piping, locate transition coupling outside of vertical service spaces so that at least a 100 mm length of noncombustible piping material is visible.

.3 Do not install PVC piping in locations where the ambient temperature can be less than 4°C (40°F) including but not limited to:

.1 outdoors,

.2 outdoor multi-storey parking garages,

.3 generator rooms,

.4 indoor parking garages,

.5 unheated loading docks.

.6 loading docks which are partially heated with local radiant heaters,

.7 ambulance bays even if fully enclosed,

.8 cold storage rooms,

.9 cold storage warehouses.

.4 Use PVC material types in accordance with the following table.

Pipe Location	PVC Type S15	PVC Type XFR
Aboveground	Not Permitted	Permitted
Underground (buried)	Permitted	Permitted

.5 Do not use PVC drainage piping serving floor drains and other fixture drains located in mechanical service rooms containing steam boilers, or hot water boilers or other water heating devices operating at water temperature greater than 60°C (140°F). In these areas, use cast iron or copper DWV drain piping in accordance with specification section 22 13 16.13, and run cast iron or copper DWV drain piping until connected to the main building sanitary drain as shown.

3.2 Installation - General

.1 Contact pipe manufacturer to provide training of contractors personnel for solvent weld training prior to installation of PVC DWV drainage piping materials.

.2 Install soil, waste and vent piping in accordance with the requirements of the plumbing code applicable at the project location. Except as otherwise shown, venting of fixtures may use any method permitted in the plumbing code.

.3 Install suspended piping to grade, parallel and close to walls and ceilings to conserve headroom and space. Install piping close to building structure to minimize furring. Group piping and run parallel to walls and ceilings.

.4 Cut pipe squarely, remove burrs and loose material and chamfer pipe ends.

.5 PVC joints for pipe size NPS 1-1/2 to NPS 6:

.1 apply joint cement to male end of pipe and to fitting socket.

.2 while the surfaces are still wet, insert the pipe into the fitting using sufficient force to ensure that the pipe bottoms into the fitting socket. Give the pipe one quarter turn during insertion.

.6 PVC joints for pipe sizes NPS 8 and larger:

.1 apply primer to fitting socket and to male end of pipe.

.2 immediately after priming, apply cement to fitting socket and to male end of pipe,

.3 while the surfaces are still wet, insert the pipe into the fitting using sufficient force to ensure that the pipe bottoms into the fitting socket. Give the pipe one quarter turn during insertion,

.4 hold the pipe and fitting together in position for 10 seconds to eliminate push out,

.5 wipe away excess cement.

.7 Follow manufacturer published cure time schedules prior to testing the piping system.

.8 In buildings with vehicles, material handling carts, forklifts or other similar equipment vehicles, protect PVC pipe located within 3 m (10 ft) of floor level with one of the following methods.

.1 use cast iron or copper tube starting from 300 mm (12 in.) below top of floor surface and extending up to 3 m (10 ft) above floor level, or

.2 provide at least two (2) protection bollards in accordance with specification section 20 05 63, to separate PVC piping from contact with such equipment.

3.3 Pipe Supports

.1 Support piping in accordance with specification section 20 05 29 except as specified herein.

.2 Support horizontal piping in accordance with the manufacturer installation requirements, but with supports

.1 spacing not to exceed 1200 mm (47 in),

.2 provided at the ends of branches,

.3 provided at each change of direction or elevation, and

.4 provided as close to a fixture trap as possible for fixture drains more than 1000 mm (39 in) long.

.3 Support vertical piping;

.1 at its base,

.2 at every other floor level with pipe riser clamps, but not to exceed a vertical spacing of more than 7.5 m (24.5 ft) between supports,

.3 arrange vertical piping so that a joint coupling bears on the top of the pipe riser clamp.

3.4 Buried Installation

.1 Lay buried piping in bedding prepared in accordance with specification section 20 05 25. Support piping on 150 mm (6 in.) thick bed of clean sand, shaped to accommodate hubs and fittings, to line and grade as shown. Backfill with clean sand to 300 mm above top of pipe or to underside of floor slab whichever is less.

.2 Support piping through foundation walls on backfill material as specified, and supported on 150 mm (6 in.) thick reinforced concrete pads. Dowel concrete pad into side of foundation walls and extend pad to obtain minimum bearing of 600 mm (2 ft) on undisturbed soil.

3.5 Firestop Collars

.1 Seal PVC pipe and fitting system which penetrates vertical or horizontal fire separation, with a listed firestop assembly. Install firestop system in accordance with the manufacturer's instructions.

3.6 Testing

.1 Test drainage piping in accordance with the requirements of the plumbing code applicable at the project location.

.2 Test before piping is concealed.

.3 Cut-out and replace leaking soldered fittings, remake joints in cast iron piping, and retest.

END OF SECTION

SANITARY DRAINS
22 13 19.13

1 GENERAL

1.1 Scope

.1 Provide sanitary waste piping accessories including floor drains, area drains and cleanouts.

1.2 Definitions

.1 The following definitions apply to this specification section.

.1 ***Grate:*** the finished exposed element of the floor or area drain which is suitable for heavy loads including vehicle loads.

.2 ***Sheet waterproof flooring:*** includes vinyl sheet or tiles, linoleum sheet or tiles, and rubber sheet or tiles, which have an installed thickness of 6 mm (1/4 in.) or less.

.3 ***Strainer:*** the finished exposed element of the floor or area drain which is suitable for foot traffic only.

.4 ***Strainer shank:*** the strainer supporting element which connects to the drain body. Grate shank has the same meaning.

.5 ***Tile (floors):*** includes ceramic or porcelain tiles and similar materials that are thicker than 6 mm (1/4 in.) including mortar/adhesive bed.

.2 Load ratings of Light Duty, Medium Duty, Heavy Duty, Extra Heavy Duty and Special Duty: in accordance with CSA B72 / ASME A112.3.1 / ASME A112.6.3.

.3 Drain type nomenclature:

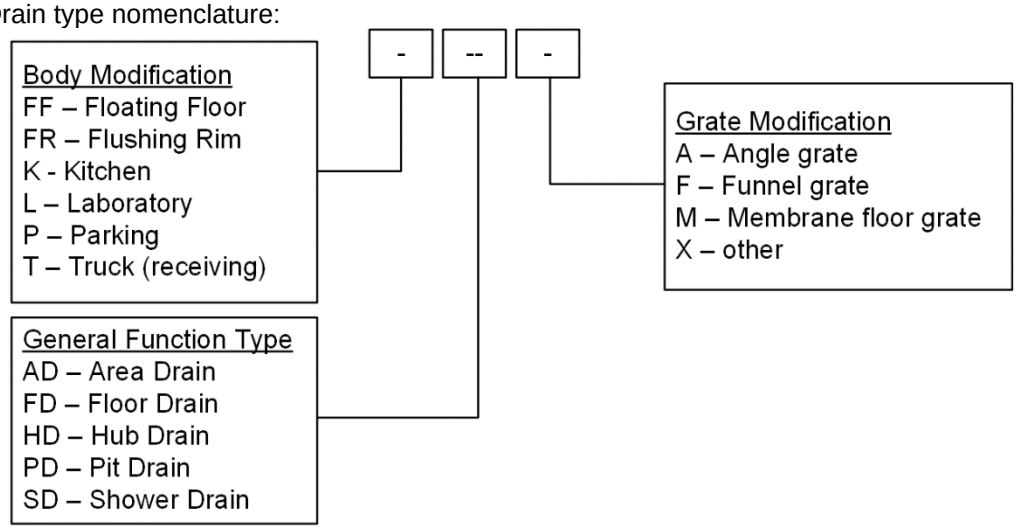

1.3 Applicable Codes and Standards

.1 Product standards:

.1	ASME A112.3.1 Vacuum	Stainless Steel Drainage Systems for Sanitary DWV, Storm, and Applications, Above-ground and Below Ground
.2	ASME A112.6.3	Floor and Trench Drains
.3	ASME A112.36.2M	Cleanouts

.4 CSA B79 Commercial and Residential Drains and Cleanouts

1.4 Submittals

.1 Submit product data sheets for materials specified herein.

2 PRODUCTS

2.1 Floor Drains (type "FD")

.1 Floor drains to be listed to CSA B79 and marked in accordance with ASME A112.3.1 (stainless steel floor drains), or ASME A112.6.3 (non-stainless steel floor drains).

.2 The following requirements apply to all floor drains, combination drains, and hub drains except as otherwise specified.

.3 Construction:

.1 application: general purpose floor drains, for floors with or without a sub-floor membrane.

.2 loading: Light Duty to CSA B79, for foot traffic,

.3 body:

(a) coated cast iron with minimum Ø200 mm (8 in.) diameter anchor flange with primary and secondary drainage (seepage) openings,

(b) sub-floor membrane clamp,

(c) bottom hub outlet pipe connection.

(d) NPS ½ NPT trap seal primer connection.

(e) No-hub outlet.

.4 strainer:

(a) adjustable height, nickel bronze or stainless steel strainer secured with stainless steel tamper resistant (Allen key) screws,

(b) openings not exceeding 8 mm (5/16 in.) in any direction,

(c) round shape for poured monolithic floor finishes,

(d) square shape for tiled or similar floor finishes,

(e) minimum size: based on location in accordance with the following table.

Drain Pipe Size, NPS	Strainer/Grate Size mm (in.) diameter or square		
	General Purpose, Kitchens	Service Rooms, Wash Down Rooms, Emergency Fixtures	Parking, Loading Docks
2	125 (5)	125 (5)	---
3	175 (7)	200 (8)	---
4	200 (8)	250 (10)	250 (10)
6	250 (10)	250 (10)	250 (10)

.5 Drain body pipe size as shown on drawings.

- Watts - fig. FD-100-C-A
- Zurn - fig. Z415 series
- Mifab - fig. F1100-C series
- Jay R. Smith - fig. 2005-C series

2.2 Hub Drains (type "HD")

.1 Application: indirect waste hubs for floors in general purpose spaces and service rooms.

.2 Type FD / FDM / LFD / LFDM floor drain (as applicable) and/except as follows:

.1 hub (no strainer):

(a) coated cast iron standing hub,

(b) minimum Ø100 mm (4 in. dia.) by a minimum height of 50 mm (2 in.) above finished floor level,

2.3 Cleanouts

.1 Listed to CSA B79 and marked in accordance with ASME A112.36.2M.

.2 In floors:

.1 line size for NPS 2, NPS 3 and NPS 4, and NPS 4 in larger lines.

.2 body: cast iron body with sub-floor membrane clamp, and with gas-tight plug.

.3 head - unfinished floor areas including service rooms:

(a) coated cast iron frame heavy duty scoriated cast iron round.

.4 head - finished floor areas:

(a) round, coated cast iron frame and polished nickel bronze adjustable head cover.

Standard of Acceptance

- Watts - fig. C-100 series
- Zurn - fig. Z-1400 series
- Mifab - fig. C1100 series
- Jay R. Smith - fig. 4000 series

.3 In exposed areas, ceiling spaces and accessible pipe chases,

.1 cast iron caulking ferrule with neoprene jacket and plug secured to body with cap screws.

2.4 Back water valves

.1 Backwater valve – suspended piping:

.1 horizontal installation, coated cast iron body with Ø100 mm (4 in. dia.) bronze flapper valve.

Standard of Acceptance

- Watts - fig. BV-200
- Zurn - fig. Z1095
- Mifab - fig. BV1000
- Jay R. Smith - fig. 7012

.2 Backwater valve – buried piping:

.1 horizontal installation, coated cast iron body with Ø100 mm (4 in. dia.) bronze flapper valve,

.2 coated cast iron floor cleanout with gas and airtight plug, and cleanout cover, suitable for extension with field installed no-hub pipe risers.

Standard of Acceptance

- Watts - fig. BV-230-R
- Zurn - fig. Z1095-15
- Mifab - fig. BV1200-R

2.5 Access Pit Covers for Backwater Valves

.1 Nominal 610 x 610 mm (24 x 24 in.), aluminum diamond plate access door, mill finish, and aluminum angle fame assembly, with hinged door and latch assembly,

.2 Design live load: 14.4 kN/m^2 (300 lbf/sq.ft.)

.3 Access door to be flush to top of angle frame.

.4 Access door and frame designed for installation prior to floor pour, or installed into the rough floor opening (retrofit)

Standard of Acceptance

- Accudor - fig. FA-300, or FA-300 Retrofit

3 EXECUTION

3.1 Installation - General

.1 Install sanitary drainage specialties in accordance with the applicable provincial plumbing code, and the requirements of the local authority having jurisdiction.

.2 Install sanitary drainage specialties in accordance with the manufacturers installation instructions and as described herein.

3.2 Floor Drains and Area Drains

.1 For floors constructed with a sub-floor membrane;

.1 install bodies flush to top of structural slab, and provide temporary coverings to protect top surface of anchor flange, receiver threads and body openings during concrete pour,

.2 after the sub-floor membrane is installed, install the membrane clamp and strainer and set the strainer top to be at the finished floor level or slightly lower,

.2 For floors constructed as a single concrete pour without a sub-floor membrane, set the body and the strainer to suit the final floor elevation prior to concrete pour. Provide temporary covering of the strainer top surface.

.3 For all types of floors, place clear pea gravel around the top of the anchor flange to protect the primary and secondary weeping drainage openings from being plugged with concrete or other flooring material.

.4 Where shown on drawings for a combination floor drain, install a hub of specified type by attaching to the floor drain strainer.

3.3 Hub Drains

.1 Install hub drain body as described above for floor drains.

3.4 Cleanouts

.1 Install cleanouts at the base of soil and waste stacks, at changes in direction of sanitary drainage piping, at intermediate locations on long runs of piping, and as shown.

.2 Extend cleanouts flush to wall or up to finished floor above except as follows:

.1 clean-outs may be terminated in accessible ceiling spaces except where drawings indicate the clean-out is to be extended up through the floor.

.3 Install cleanouts located in floors clear of obstructions.

3.5 Backwater valves

.1 Install backwater valves in [main sewer lines][, where indicated][, and at weeping tile connections].

.2 Install backwater valves in access pits where valves are buried below slab-on-grade floors. Provide access pit door. Coordinate with general trades work to confirm required floor opening dimensions as required to suit access door frame.

.3 In electrical transformer rooms, where a floor drain is shown provide a backwater valve located outside of the transformer room.

END OF SECTION

Master revised: 12 February 2018

DOMESTIC WATER TEMPERATURE MIXING VALVE
22 39 13

1 GENERAL

1.1 Scope

.1 Provide temperature mixing valves and temperature mixing valve stations for temperature control of domestic hot water or non-potable process hot/tempered water in the following locations:

.1 at domestic water heaters and heat exchangers (master control),

.2 serving a group of plumbing fixtures (group control),

.3 serving process equipment (process control).

.2 This specification section does not apply to temperature mixing valves located at individual plumbing fixtures; refer to specification section 22 42 13 *Plumbing Fixtures.*

.3 This specification section does not apply to temperature mixing valves for emergency shower and eye-wash stations; refer to specification section 22 45 13 *Emergency Plumbing Fixtures.*

1.2 Definitions and Abbreviations

.1 The following definitions apply to this section.

.1 ***Master (mixing valve) –*** a temperature mixing valve located at the heat source, as further defined in ASSE 1017.

.2 ***Group (mixing valve) –*** a temperature mixing valve producing tempered water for a single pipe supplying multiple plumbing fixtures, as further defined in ASSE 1069

.3 ***Process (mixing valve) –*** a temperature mixing valve producing tempered water supplying process equipment (non-plumbing fixtures).

1.3 Applicable Codes and Standards

.1 Installation codes and standards:

.2 Product standards:

.1	ASSE 1017	Performance Requirements for Temperature Actuated Mixing Valves for Hot Water Distribution Systems
.2	ASSE 1069	Performance requirements for Automatic Temperature Control Mixing Valves
.3	ASTM B88	Standard Specification for Seamless Copper Water Tube
.4	AWS A5.8	Brazing Filler Metal.
.5	CSA B125	Plumbing Supply Fittings
.6	CSA C22.2 No. 24	Temperature-Indicating and -Regulating Equipment
.7	CSA C22.2 No. 205	Signal Equipment
.8	CAN/CSA-E60730-2-14	Automatic Electrical Controls - Part 2: Particular Requirements for Electric Actuators
.9	NSF/ANSI/CAN 61(2020)	Drinking Water System Components – Health Effects
.10	NSF/ANSI/CAN 372 (2020)	Drinking Water System Components – Lead Content

1.4 Submittals

.1 Submit product data sheets for materials specified herein.

2 PRODUCTS

2.1 Thermostatic Mixing Valves – Master Valve ("TMV-M")

.1 General:

.1 application: master mixing valve at the domestic water heat source, for low- flow systems.

.2 type: thermal actuated mixing valve,

.3 listed to CSA B125 and ASSE 1017,

.4 listed to NSF 61+G or NSF 372.

.2 Performance:

Primary Parameter	Secondary Parameter	Value
Cold water inlet temperature	Range	4 - 20°C (39 - 68°F)
Hot water inlet temperature	Range	49 - 82°C (120 - 180°F)
Controlled Temperature Range	High temperature unit	32 to 71°C (90 to 160°F)
	Low temperature unit	16 to 49°C (60 to 120°F)
Temperature stability, at flow rate range	0 – 0.3 L/s (0 – 5 gpm)	± 1.7°C (±3°F)
	0.3 to 2.5 L/s (5 to 40 gpm	± 2.8°C (± 5°F)
Maximum Flow Rate	at 100 kPa (15 psi)	0.82 L/s (13.0 gpm)
Minimum Flow Rate	---	0.03 L/s (0.5 gpm)
Maximum Differential Pressure	Between hot and cold supplies	25% of cold water pressure
Minimum design pressure	---	860 kPa at 93°C (125 psi at 200°F)

.3 Construction:

.1 brass or bronze body, with corrosion resistant internals,

.2 pipe size range: NPS ½ to NPS 1.

.3 thermal actuated movement, with adjustable temperature selection,

.4 tamper resistant setting handle,

.5 pipe ends: NPT to ASME B1.20.1 or soldered joint, with union,

.6 integral in-line check valves and inlet debris screens.

Standard of Acceptance

- Watts (Powers) - fig. Hydroguard series
- Lawler - fig. 61
- Bradley
- Haws

2.2 Thermostatic Mixing Valves – Group Tempered Supply ("TMV-G")

.1 General:

.1 application: group mixing valve, for single tempered water supply pipe serving multiple plumbing fixtures,

.2 valves designed to provide both scald protection and thermal shock protection,

.3 listed to CSA B125 and ASSE 1069,

.4 listed to NSF 61+G or NSF 372.

.2 Performance:

Primary Parameter	Secondary Parameter	Value
Cold water inlet temperature	Range	4 - 29°C (39 - 85°F)
Hot water inlet temperature	Range	49 - 82°C (120 - 180°F)
Controlled Temperature Range	Range	27 to 49°C (80 to 120°F)
Maximum Approach Temperature	Hot Inlet to Mixed Temperature	+3°C (5°F) ΔT
Temperature stability, at flow rate range	Full operating flow range	± 1.7°C (±3°F)
Maximum Flow Rate	at 100 kPa (10 psi)	0.36 L/s (5.7 gpm)
Minimum Flow Rate	---	0.03 L/s (0.5 gpm)
Maximum Differential Pressure	Between hot and cold supplies	25% of cold water pressure
Minimum design pressure	---	1000 kPa at 93°C (150 psi at 200°F)

.3 Construction:

.1 brass or bronze body, with corrosion resistant internals,

.2 pipe size range: NPS ½ to NPS 1.

.3 thermal actuated movement, with adjustable temperature selection and tamper-resistant locking cap,

.4 internal thermostat controls both hot and cold water flow,

.5 pipe ends: NPT to ASME B1.20.1 with union, or soldered joint with union,

.6 integral in-line check valves and inlet debris screens.

.7 discharge temperature gauge, 0 - 93°C (0 - 200°F),

Standard of Acceptance

- Watts (Powers) - fig. LFMMV series
- Chicago Faucets - fig. 122-ABNF
- Bradley - fig. S59-4016 series
- Acorn - fig. ST7069
- Lawler - fig. 410

3 EXECUTION

3.1 Mixing Valve Installation – General Requirements

.1 Install mixing valves in accordance with manufacturer instructions.

.2 Arrange piping connections to allow disassembly and reassembly of inlet strainers and integral check-valves.

.3 Except where a mixing valve is provided with integral service stops, provide service ball-valves at inlet and discharge connections.

.4 Provide in-line, spring-loaded check valves between service ball valves and inlet connections, regardless of whether or not the mixing valve has integral check valves.

3.2 Programming and Configuration

.1 Program or configure digital temperature controllers for the required installation configuration and settings.

3.3 Start-Up and Testing

.1 Adjust and test each mixing valve. Flow water through the TMVs at the minimum and maximum flow conditions for a period of three (3) minutes each, and then record the discharge temperature under both flow conditions.

.2 Unless otherwise shown, adjust the mixing valve setpoints in accordance with the following:

TMV Type	Occupancy	Temperature Setpoint
Master	Healthcare	60°C (140°F)
Master	Long Term Care	60°C (140°F)
Master	All Other Occupancies	49°C (120°F)
Group (Showers)	All Occupancies	40°C (105°F)
Group (Sitz Baths)	Healthcare	40°C (105°F)

.3 For process mixing valves, adjust the temperature setpoint to the supply water temperature as shown.

3.4 [][Commissioning Program

.1 Comply with the project commissioning requirements in accordance with specification section 20 08 15.

.2 The verification and testing requirements specified in this section may be concurrent with, or conducted separately from, the commissioning program, as coordinated with the Contractor and the commissioning agent.]

3.5 Test and Installation Records

.1 Provide a report of the required testing and include:

.1 fixture reference,

.2 measured temperature at minimum and maximum flow rates,

.3 date of test(s),

.4 signature of person(s) conducting test.

.2 Submit a copy of each report to the Consultant and Owner for review and acceptance.

.3 The above tests are subject to a demonstration test audit of up to 10% of the total fixture count to verify compliance. If audit tests are not satisfactory to the Consultant, additional testing and verification will be conducted by the Contractor until such time as a demonstration audit provides satisfactory results to the Consultant.

End of Section

PLUMBING FIXTURES
22 42 00

1 GENERAL

1.1 Scope

.1 Provide plumbing fixtures and trim, and temperature mixing valves for fixtures.

.2 This specification section does not apply to temperature mixing valves located remote from individual plumbing fixtures, or for process equipment; refer to specification section 22 39 13 *Domestic Water Temperature Mixing Valves.*

1.2 Definitions

.1 The following definitions apply to this section.

.1 ***Barrier-free:*** has the same meaning as the applicable building code of the place of the Work, or in its absence, means, when applied to plumbing fixtures and emergency plumbing fixtures, the fixture can be approached, entered, and used by persons with physical or sensory disabilities.

1.3 Applicable Codes and Standards

.1 Installation codes and standards:

.1 CSA Z317.1 Special Requirements for Plumbing Installations in Health Care Facilities.

.2 CSA Z318.3 Commissioning of Plumbing Systems in Health Care Facilities

.2 Product standards:

.1 ASME A112.6.1 Supports for Off-the-Floor Plumbing Fixtures for Public Use

.2 ASSE 1016/ASME A112.1016/CSA B125.16 Performance Requirements for Automatic Compensating Valves for Individual Showers and Tub/Shower Combinations

.3 ASSE 1066 Performance Requirements for Individual Pressure Balancing Valves for Individual Fixture Fittings

.4 ASSE 1070 Performance Requirements for Water Temperature Limiting Devices

.5 CSA-B45 Series Plumbing Fixtures.

.6 CSA-B125 Plumbing Fittings.

.7 NSF/ANSI 61 Drinking Water System Components – Health Effects, including Annex G

.8 NSF/ANSI 372 Drinking Water System Components – Lead Content

.9 UL 1951 Electrical Plumbing Accessories

1.4 Fixture Count and Location

.1 Determine the number and location of plumbing fixtures from Architectural drawings in the first instance, followed by the mechanical drawings.

.2 In the event of a conflict as to location of plumbing fixtures between the architectural drawings and the mechanical drawings, the location as shown on the architectural drawings govern.

1.5 Submittals

.1 Submit product data sheets for materials specified herein. Organize the submission in accordance with the following requirements:

.1 make one consolidated submission for all products specified,

.2 indicate the fixture type designation for each product on each submittal page,

.3 where a fixture type consists of multiple product components, organize the information in a cohesive presentation by fixture type designation,

.4 where a data sheet includes multiple figures/options, clearly mark the applicable model number and/or option that is being proposed as meeting the specification requirement.

2 PRODUCTS

2.1 General Requirements - Fixture Quality

.1 Fixtures and trim of the same type to be the product of one manufacturer.

.2 Finished surfaces to be clear, smooth and bright, and guaranteed not to craze, discolour or scale.

.3 Visible parts of faucets, escutcheons, wastes, strainers, traps, shower heads, supplies and stops to be chrome plated.

.4 Fit water supply faucet spouts with aerators.

.5 Floor mounted water closets fitted with china bolt caps; plastic bolt caps are not acceptable.

.6 Where fixtures and trim are identified by manufacturers' catalogue designation these references are to establish quality standards not otherwise specified. For the purposes of this section of the specification, fixtures or trim from manufacturers listed below are equally acceptable when conforming to the same level of quality.

Standard of Acceptance

- Eljer
- American Standard
- Crane
- Kohler
- Symmons Valve
- Waltec
- Delta Commercial
- Emco
- Beneke
- Centoco
- Kindred
- Waltec
- Architectural Metals

2.2 Water Closet Type "WC-1"

.1 Vitreous china, elongated, wall hung bowl, siphon jet action, with carrier to set top-of-seat height between 430 and 460 mm (17 and 18 in) from finished floor.

Standard of Acceptance

- American Standard "Afwall Millenium" 3351.101

.2 Exposed chrome plated flush valve with vacuum breaker NPS 1½ top spud connection.

Standard of Acceptance

- American Standard Selctronic Touchless Toilet Flush Valve

.3 Open front seat, less cover with check hinges, for elongated bowl, extra heavy duty (white).

Standard of Acceptance

° Centoco - 1500cc

2.3 Lavatory Type "L-1"

.1 Vitreous china wall hung basin, modified with sealed overflow, faucet holes for 200 mm (8 in) centreset, white in colour supplied with modified concealed arm carrier.

Standard of Acceptance

° Sloan "Aer-dec" AD-81000 BASYS 1 Station Sink

.2 Deck-mounted hardwired, mid body faucet,

Standard of Acceptance

° Sloan “Basys” EFX-200

.3 NPS 1¼ cast brass chrome plated tailpiece with open grid strainer, offset P.O. plug modified to 150 mm (3 in) offset

Standard of Acceptance

° Cambridge Brass 33T290 modified

.4 Chrome plated NPS 3/8 rigid or flexible supplies with lockshield stops

Standard of Acceptance

° Cambridge Brass 47T512

.5 Chrome plated cast brass swivel "P" trap with cleanout, slip joint inlet, female outlet, NPS 1¼ M.I.P. adapter and chrome plated escutcheon

Standard of Acceptance

° Eljer 804-1100

2.4 Stainless Steel Sink Type "S-1"(single compartment)

.1 Single compartment, 16-1/2 in x 20-1/2 in x 5-3/8 in, 18-8 302 stainless steel sink, drilled for single-hole and crumb cup strainer and NPS 1½ tailpiece.

° Elkay ELUHAD141855PD

.2 Deck-mount gooseneck faucet with hands-free activation.

Standard of Acceptance

° Delta “Trinsic” 9959TL-DST

.3 NPS 1½ rough brass "P" trap with cleanout

Standard of Acceptance

° Eljer 804-1110 complete with wall nipple 804-1155

.4 Rough brass NPS ½ lockshield stop on each supply.

2.5 Stainless Steel Sink Type "S-2" (single compartment)

.1 Single compartment, 30-1/2 in x 18-1/2 in x 5-3/8 in, 18-8 302 stainless steel sink, drilled for single-hole and crumb cup strainer and NPS 1½ tailpiece.

- Elkay ELUHAD281655PD

.2 Deck-mount gooseneck faucet with hands-free activation.

Standard of Acceptance

- Delta “Cordova” 9085TL-PR-DST

.3 NPS 1½ rough brass "P" trap with cleanout.

Standard of Acceptance

- Eljer 804-1110 complete with wall nipple 804-1155

.4 Rough brass NPS ½ lockshield stop on each supply

2.6 Thermostatic Mixing Valves – Lavatories, Under-Sink Mount (“TMV”)

.1 General:

.1 application: temperature mixing valve at an individual lavatories or sinks, for under-basin mounting.

.2 type: thermal actuated mixing valve,

.3 listed to ASSE 1070,

.4 listed to NSF 61+G or NSF 372.

.2 Performance:

Primary Parameter	Secondary Parameter	Value
Cold water inlet temperature	Range	4 - 20°C (39 - 68°F)
Hot water inlet temperature	Range	49 - 82°C (120 - 180°F)
Maximum Approach Temperature	Hot Inlet to Mixed Temperature	+ 3.8°C (5°F) ΔT
Controlled Temperature Range	High temperature unit	27 to 49°C (80 to 120°F)
Temperature stability, at flow rate range	0 – 0.3 L/s (0 – 5 gpm)	± 1.7°C (±3°F)
	0.3 to 2.5 L/s (5 to 40 gpm	± 2.8°C (± 5°F)
Maximum Flow Rate	at 100 kPa (15 psi)	0.0.03 L/s (0.5 gpm)
Minimum Flow Rate	---	0.016 L/s (0.25 gpm)
Maximum Differential Pressure	Between hot and cold supplies	20% of cold water pressure

Primary Parameter	Secondary Parameter	Value
Minimum design pressure	---	860 kPa at 93°C (125 psi at 200°F)

.3 Construction:

.1 brass or bronze body, with corrosion resistant internals,

.2 four port design - cold inlet and outlet, hot inlet, tempered outlet,

.3 filed-convertible to be suitable for installation as a;

(a) dual-outlet for two-handle or single handle faucet, or

(b) single-outlet for tempered water to an automatic lavatory faucet,

.4 thermal actuated movement, with adjustable temperature selection, and maximum temperature limiter,

.5 tamper resistant setting handle,

.6 pipe ends: NPS 3/8 compression fittings,

.7 integral inlet debris screens.

Standard of Acceptance

- Watts (Powers) - fig. LFUSG-B
- Lawler - fig. TMM-1070T

2.7 Sealant Between Fixture and Wall Finish:

.1 One-part acetoxy silicone sealant

.2 White or clear colour.

.3 Formulated with fungicide

Standard of Acceptance

- Tremco - fig. Tremsil 200
- Dow Corning
- GE

3 EXECUTION

3.1 Fixture Installation - General

.1 Support fixtures level and square and connect with supplies, drains, traps and vents.

.2 Where a faucet has separate hot and cold water handles, position the hot water handle on the left side of the faucet.

.3 Where fixtures on located on exterior walls, run the water supplies up through the floor. For other fixture locations, run water supplies in the wall cavity.

.4 Provide resilient, watertight and gas-tight seals for every joint in a floor flange or between a floor-outlet fixture and the drain.

3.2 Fixture Supports

.1 Provide plates, brackets, wall carriers, cleats, and supports to secure fixtures in place.

.2 Fasten wall brackets with bolts attached to double steel supporting plates.

.3 Bolt fixture to wall through cored holes under lavatory wall flange, using chrome plated carriage bolts with integral washers, and expansion shields.

.4 Install extra-heavy-duty chair carriers for fixtures not directly supported from floor.

.5 Conceal vertical supports and baseplates in wall construction.

.6 Apply sealant bead between wall mounted fixture and finished wall and finish with a smooth concave profile.

.7 Set floor mounted water closet bowls in mastic, and seal the floor flange with a resilient, watertight and gas-tight flange seal.

3.3 Plumbing Fixture Installation Heights and Clearances

.1 Install plumbing fixtures at heights as shown on architectural drawings and specifications. Where such information is not provided therein, install fixtures at heights as described in the following table.

.1 Mounting heights are in reference to the top of the finished floor level unless otherwise stated.

Fixture Type	Mounting Height Reference (above finished floor)	Mounting Height Mm (inch)	
		Barrier-Free	All Other
Water Closet	Top of seat	≥ 430 and ≤ 460 (≥ 17 and ≤ 18)	≥ 430 and ≤ 460 (≥ 17 and ≤ 18)
Urinal	Front rim	400 to ≤ 430 (16 to ≤ 16.5) [Note 1]	575 to ≤ 600 (22.5 to ≤ 23.5)
Lavatory	Rim	850 to ≤ 865 (33.5 to ≤ 34)	850 to ≤ 865 (33.5 to ≤ 34)
Shower	Valve control handle	1150 to ≤ 1200 (45 to ≤ 47)	1150 to ≤ 1200 (45 to ≤ 47)
	Hand-held shower head: Two positions	1200 and 2300 (45 and 90) [Note 2]	1200 and 2300 (45 and 90) [Note 2, 3]
Bathtub	Faucet centerline (above tub rim)	425 to ≤ 450 (16.5 to ≤ 17.5)	425 to ≤ 450 (16.5 to ≤ 17.5)
	Hand-held shower head; Two positions	1200 and 2300 (45 and 90) [Note 2]	1200 and 2300 (45 and 90) [Note 2, 3]

Notes:
[1] Where there are two or more urinals in a washroom, one urinal is to be mounted at this height.
[2] An adjustable hand-held shower head mounted on a vertical shower bar, that can be set at these positions.
[3] If specified.

.2 Mount manually-operated flushing control for water closets;

.1 between 500 and 900 mm above the finished floor, and

.2 for barrier-free water closets, located on the transfer side of the water closet.

.3 Mount manually-operated flushing control for urinals;

.1 between 900 and 1100 mm above the finished floor level for barrier-free urinals, and

.2 at a height to suit the urinal fixture and flush-control valve for all other urinals.

.4 For barrier-free lavatories not equipped with a fixture-skirt barrier, arrange piping beneath the lavatory so that the hatched area shown in figure 1 is clear of any obstruction.

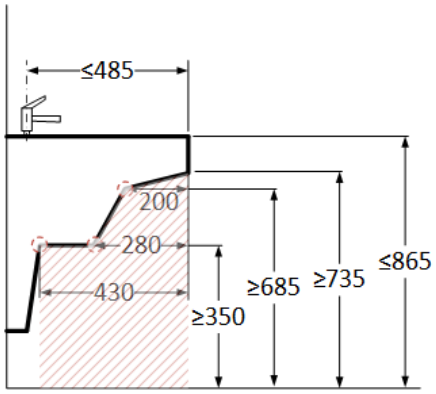

Figure 1: Barrier-Free Lavatory Clearances

3.4 Hand-Held Showers

.1 Install hand-held shower head hook on independent mounting rail located centered on the shower enclosure wall.

.1 Do not install shower hooks on grab-bars provided under other Divisions of the Work.

3.5 Thermostatic Mixing Valve Installation

.1 Install a fixture Thermostatic Mixing Valve at individual faucets where specified as an accessory for the fixture type, or as otherwise shown.

.2 Provide field installed bass-bodied, in-line spring-loaded check valves on the hot and cold water supplies to each TMV unit, regardless of whether or not the TMV is equipped with integral check valves. For greater certainty, if the TMV unit is supplied with integral check valves they are deemed not to meet this requirement.

3.6 Protection

.1 Cover plumbing fixtures and trim with plywood, cardboard or heavy paper and kept protected before, during and after installation and until work is completed and accepted.

.2 Clean fixtures, and trim immediately prior to building completion.

3.7 Start-Up and Testing

.1 Test, adjust and set high temperature limit stops on fixtures to supply a maximum water temperature, including faucets with integral or remote temperature mixing valves, as follows.

Fixture Type	Occupancy	Temperature Setpoint
Combination tub/shower, Showers	Healthcare, Long-Term Care, Retirement Homes	43°C (109°F)
	Other Occupancies	49°C (120°F)
Faucets	Healthcare, Long-Term Care,	43°C (109°F)

	Retirement Homes	
	Other Occupancies	49°C (120°F)
Group (Sitz Baths)	Healthcare	40°C (105°F)

3.8 [][Commissioning Program

.1 Comply with the project commissioning requirements in accordance with specification section 20 08 15.

.2 The verification and testing requirements specified in this section may be concurrent with, or conducted separately from, the commissioning program, as coordinated with the Contractor and the commissioning agent.]

3.9 Test and Installation Records

.1 Provide a report of this testing and include:

.1 fixture reference,

.2 measured maximum temperature,

.3 date of test(s),

.4 signature of person(s) conducting test.

.2 Submit a copy of each report to the Consultant and Owner for review and acceptance.

.3 The above tests are subject to a demonstration test audit of up to 10% of the total fixture count to verify compliance. If audit tests are not satisfactory to the Consultant, additional testing and verification will be conducted by the Contractor until such time as a demonstration audit provides satisfactory results to the Consultant.

END OF SECTION

Master revised: March 3, 2022

DRINKING FOUNTAINS AND WATER COOLERS
22 47 00

1 GENERAL

1.1 Scope

.1 Provide drinking fountains, water coolers and bottle-fillers.

1.2 Definitions

.1 The following definitions apply to this section.

.1 ***Barrier-free:*** has the same meaning as the applicable building code of the place of the Work, or in its absence, means, when applied to plumbing fixtures and emergency plumbing fixtures, the fixture can be approached, entered, and used by persons with physical or sensory disabilities.

1.3 Applicable Codes and Standards

.1 Product standards:

.1	ANSI 117.1	Accessibility and Usable Buildings
.2	CSA C22.2 No. 120	Refrigerated Equipment
.3	NSF/ANSI 61	Drinking Water System Components – Health Effects, including Annex G
.4	NSF/ANSI 372	Drinking Water System Components – Lead Content

1.4 Fixture Count and Location

.1 Determine the number and location of drinking fountains and/or water coolers from Architectural drawings in the first instance, followed by the mechanical drawings.

.2 In the event of a conflict as to location of drinking fountains and/or water coolers between the architectural drawings and the mechanical drawings, the location as shown on the architectural drawings govern.

1.5 Submittals

.1 Submit product data sheets for materials specified herein.

1.6 Warranty

.1 Extended five (5) year warranty on refrigeration system and component parts.

2 PRODUCTS

2.1 Bottle Filler Type “BF-1”

.1 General:

.1 type: non-refrigerated bottle filler, on-wall mounted.

.2 conforms to ANSI 117.1 for barrier-free installations,

.3 listed to CSA C22. 2 No. 120.

.4 listed to NSF 61+G and NSF 372.

.2 Construction:

.1 one-piece type 304 brushed stainless steel top,

.2 galvanized steel frame and stainless steel cabinet panels,

.3 electronic bottle filler sensor with electronic front and side bubbler pushbar,

.4 laminar flow, non-aspirating dispensing filler, with plastic fill components utilizing a silver-based antimicrobial compound,

.5 filtered with visual filter monitor,

.6 power supply: 120 V, 1 phase.

.3 Performance:

.1 minimum inlet water pressure: 140 kPa (20 psi)

.2 maximum inlet water pressure: 700 kPa (100 psi)

.4 Accessories:

.1 wall mounting bracket,

.2 NPS 1¼ "P" trap.

.3 rough brass NPS ½ stop on supply

Standard of Acceptance.

° Elkay - fig. LZSDWSLK

3 EXECUTION

3.1 Installation

.1 Install fixtures in accordance with manufacturer instructions.

.2 Fasten wall brackets with bolts attached to concrete walls, or to double steel supporting plates in partition walls.

.3 Apply clear sealant bead between wall mounted fixture and finished wall and finish with a smooth concave profile.

.4

3.2 Mounting Heights and Clearances

.1 Install plumbing fixtures at heights as shown on architectural drawings and specifications. Where such information is not provided therein, install fixtures at heights as described in the following table.

.1 mounting heights are in reference to the top of the finished floor level unless otherwise stated.

Fixture Type	Mounting Height Reference (above finished floor)	Mounting Height Mm (inch)	
		Barrier-Free	All Other
BF-1	Bottle landing surface	≤ 875 (≤ 34.5)	
	Activation sensor	≥ 900 and ≤ 1100 (≥ 35.5 and ≤ 43)	

3.3 Flushing and Cleaning

.1 For new building installations, do not flush water through the drinking fountains, water coolers, or bottle fillers until after flushing of the water distribution piping is completed by other means.

.2 Separately flush each drinking fountain or water cooler for a minimum of 15 minutes before placing into service.

End of Section

Master revised: August 17, 2021

COMMON WORK RESULTS FOR HVAC PIPING
23 05 01

1 GENERAL

1.1 Scope

.1 Provide heating and cooling piping systems in accordance with the referenced piping materials, standards, specifications and piping codes described herein.

.2 This specification applies to;

.1 water based piping systems, including glycol/water mixtures, for building hydronic heating and cooling systems,

.2 steam and condensate systems,

.3 non-potable water systems for HVAC services, and

.4 process heating or cooling systems.

1.2 Related Sections

.1 Without limiting the scope of work or applicability of other specification sections, the work under this section directly integrates with or refers to the following specification sections:

.1 20 05 24 Welding and Brazing.

.2 23 25 33 HVAC Makeup-Water Filtration Equipment]

1.3 Applicable Codes and Standards

.1 Legislation:

.1 Ontario Regulation 220/01 Boiler and Pressure Piping Regulation

.2 Installation standards and codes (as adopted and amended by the AHJ for pressure vessels):

.1 CSA B51 Boiler, pressure vessels, and pressure piping code

.2 ASME B31.1 Power Piping

.3 ASME B31.3 Process Piping

.4 ASME B31.9 Building Services Piping

1.4 Qualified Tradesmen

.1 Work to be performed by qualified, licensed and recognized firm with an established reputation in this field, using tradesmen holding applicable certificates of competency as applicable to the work.

1.5 Utility Steam Service

.1 Utility steam service provided by Enwave District Energy Limited to building at pressure between 900 and 1400 kPa (125 - 195 psi).

.2 Steam traps on utility steam piping ahead of building pressure reducing valves to be selected for operation between 700 - 1400 kPa (100 - 200 psi).]

1.6 Registration and Inspection

.1 Before commencing work, make arrangements and pay for registration and inspection by the AHJ responsible for boiler and pressure vessel safety for the following pressure piping systems:

.1 Service water piping for heating a building, at design temperatures greater than 121°C (250°F) or at design pressures greater than 1100 kPa (160 psig),

.2 HVAC water systems (other than building heating water systems), including chilled water and condenser water systems, at design temperatures greater than 65°C (150°F) or design pressures greater than 1717 kPa (250psig).

.2 At the start of the Work, obtain existing pressure piping system registration numbers, if available, from the Owner and/or the AHJ.

1.7 Design Criteria – Steam, Condensate and Feedwater Systems

.1 Piping design and installation code:

.1 To ASME B31.1 for steam design pressure greater than 100 kPa (15 psig)

.2 To ASME B31.9 for steam design pressure 100 kPa (15 psig) or less.

.3 Piping code for condensate systems: same as the connected steam system.

.2 Piping system(s) includes but is not limited to;

.1 steam boilers,

.2 unfired steam generators,

.3 condensate receivers with pumping sets,

.4 deaerator and/or feedwater units and feedwater pumps,

.5 make-up water heaters,

.6 blow down tanks,

.7 steam metering,

.8 pressure reducing valve assemblies,

.9 flash tanks,

.10 trap assemblies,

.11 heat exchangers,

.12 controls,

.13 water treatment.

1.8 Design Criteria - Hot Water Heating Systems

.1 Piping design and installation code:

.1 To ASME B31.9 for piping system not subject to boiler and pressure vessel regulations.

.2 To ASME B31.1 for piping systems which are subject to boiler and pressure vessel regulations.

.2 System includes but is not limited to;

.1 Boilers,

.2 Heat exchangers,

.3 Pumps,

.4 Expansion tanks,

.5 Convectors,

.6 Radiators,

.7 Radiant panels,

.8 Finned radiation,

.9 Unit heaters,

.10 Heating coils,

.11 Controls,

.12 Water treatment.

.3 System design criteria:

.1 Design temperatures and pressures:

System Type	Supply Temp. °C (°F)	Return Temp. °C (°F)	Design Temp. °C (°F)	Maximum Operating Pressure kPa (psig)	Design Pressure kPa (psig)
Constant temperature heating	93 (200)	77 (170)	96 (205)	900 (125)	1030 (150)
Radiant ceiling panels	93 (200)	82 (180)	96 (205)	900 (125)	1030 (150)
Finned Radiation with enclosure	93 (200)	77 (170)	96 (205)	900 (125)	1030 (150)
Flat plate and cast iron radiators	60 (140)	50 (120)	93 (200)	900 (125)	1030 (150)
Terminal Reheat System	60 (140)	50 (120)	93 (200)	900 (125)	1030 (150)
Low temperature Terminal Reheat	40 (104)	32 (90)	65 (150)	900 (125)	1030 (150)

1.9 Design Criteria - Cooling Water Systems

.1 Piping design and installation code:

.1 To ASME B31.9 for piping system not subject to boiler and pressure vessel regulations.

.2 To ASME B31.1 for piping systems which are subject to boiler and pressure vessel regulations.

.2 System includes but is not limited to;

.1 Refrigeration machines,

.2 Heat exchangers,

.3 Thermal storage tanks,

.4 Ice builders,

.5 Pumps,

.6 Expansion tank,

.7 Evaporative coolers,

.8 Cooling towers,

.9 Indoor condenser water basin,

.10 Condenser water filters,

.11 Cooling coils,

.12 Fan coil units,

.13 Server room cooling units,

.14 Controls,

.15 Water treatment.

.3 System design criteria:

.1 Design temperatures and pressures:

System Type	Supply Temp. °C (°F)	Return Temp. °C (°F)	Design Temp. °C (°F)	Maximum Operating Pressure kPa (psig)	Design Pressure kPa (psig)
Chilled water	5.5 (42)	14.5 (58)	38 (100)	900 (125)	1030 (150)
Primary chilled water	5.5 (42)	11 (52)	38 (100)	900 (125)	1030 (150)
Secondary chilled water	5.5 (42)	14.5 (58)	38 (100)	900 (125)	1030 (150)
Process chilled water	10 (50)	18 (64)	38 (100)	900 (125)	1030 (150)
Condenser Water (cooling towers)	29.5 (85)	35 (95)	60 (140)	900 (125)	1030 (150)

1.10 Design Criteria – Water Source and Quality

.1 Water source sample analysis:

.1 Take water samples and conduct laboratory analysis of the water source at the location of the project. The following table summarizes key parameters from publicly available information and is to be used for general information only.

Parameter	Value (average)	Remark
Location	City of Toronto	
Data Source	Annual Report	
Report Date	2016 reporting year	
Sample Source	Treated municipal water	
General Parameters		
pH	7.5	---
Conductivity	320	µmhos/cm
Total Hardness	129	mg/L (as CaCO3)
Total Alkalinity	89	mg/L
Total Dissolved Solids	208	mg/L
Iron	0.013	mg/L

Parameter	Value (average)	Remark
Chlorine	1.37	mg/L

2 PRODUCTS

.1 Not used.

3 EXECUTION

3.1 Pipe Installation General Requirements

.1 General layout of mains, risers, run-outs and connection details of piping systems are shown.

.2 Install concealed pipes close to building structure to keep furring spaces to minimum and minimize obstruction to other services in ceiling spaces.

.3 Run exposed piping parallel to walls and conserve headroom and space. Group piping wherever practical.

.4 Ream pipe after cutting to length and clean off scale and dirt inside and outside of pipe before threading, grooving or welding.

.5 Provide clearance for installation of insulation and access for maintenance of equipment, valves and special fittings such as expansion joints.

.6 Cap ends during construction to prevent entry of foreign matter.

.7 Provide bends, expansion loops, hoses or joints to compensate for pipe expansion and contraction.

.8 Anchor, guide and laterally support vertical and horizontal piping to support filled weight and absorb thrust under operating conditions.

.1 For steam, gas and vapour piping, provide temporary intermediate supports when hydrostatically piping so that pipe support spans are not greater than that required for liquid piping service.

.9 Erect piping so that expansion forces, gravity forces and thrust from changes in direction do not stress connections to apparatus.

.10 [Mechanical grooved pipe, couplings, fittings and valves may be used for water and glycol piping systems in place of welded or flanged pipe jointing methods, where operating temperature conditions are in range -30°C through 110°C (-30°F through 230°F.][]

.11 Do not use galvanized materials in contact with glycols.

.12 Refer to piping system specifications for additional requirements.

3.2 Drainage Piping, Drain Valves and Air Vents

.1 Provide drain valves at low points in water piping systems and in valved run-outs from risers so that system or isolated parts of system can be drained. Locate piping system drain valves as close to the system pipe as possible.

.2 Provide an additional drain valve at the drain termination point where;

.1 the drain valve is not accessible from a floor with or without the use of a 2.4 m (8 ft) high ladder, or from an elevated work platform,

.2 and as otherwise specified herein.

.3 Provide drain valves on equipment drains, including but not limited to refrigeration equipment, boilers, heat exchangers and water treatment and filtration equipment.

.4 For copper tube drains, connect coper drain tubing to the outlet side of equipment drain valves or piping system drain valves; do not make connections of copper drain tubes directly to carbon or stainless steel HVAC liquid piping.

.5 Drain sizes:

.1 NPS 2 for large water-filled equipment including refrigeration equipment, boilers, and heat exchangers.

.2 NPS ¾ for other equipment drains, including integral or field installed condensate and drip pans.

.3 NPS 2 for piping system drains, unless otherwise shown.

.6 Run large equipment drains to floor trenches unless otherwise shown to terminate in a specific location.

.7 Run other equipment drains to nearest floor drain unless otherwise shown to terminate in a specific location. Where NPS ¾ drains terminate at a floor drain, provide a funnel of at least 200 mm x 100 mm (8 in x 4 in) on the floor drain cover.

.8 Install piping system drains as follows;

.1 In mechanical service rooms and permanently accessible service spaces, extend drains down along a wall or column and terminate approximately 1000 mm (40 in) above the floor level in the service room, or above the lowest accessible level in a vertical service space.

.2 In other service rooms including non-accessible service spaces, electrical rooms, telecom rooms or data rooms, extend drains to a location outside of these service room to a location agreed with by the Engineer unless otherwise shown and provide a drain valve at the termination point.

.3 Where piping system drains are located in finished areas above accessible ceilings that are not more than 3 m (10 ft) high, terminate the drains approximately 200 mm (8 in) above the top of the ceiling and provide a drain valve at this termination point.

.4 Where piping system drains are located above non-accessible ceilings, or where an accessible ceiling is more than 3 m (10 ft) high, extend the drain tubing to a location agreed with by the Engineer unless otherwise shown and provide a drain valve at this termination point.

.9 Terminate drain ends with a 45° elbow and a brass body, male-end, cam-and-groove (Camlock) coupling fitting with dust cap. Supply the matching hose-end female connector and turn over to the owner.

.10 Provide air vents with isolation ball valves at high points to allow effective drainage of the system and to facilitate removal of air from the system.

3.3 Pressure and Leak Testing - Liquid Service Piping

.1 This test procedure applies to piping normally containing water, including HVAC and process water and glycol/water mixes, and steam-condensate piping.

.2 Pressure test liquid piping systems unless otherwise specified in other sections of Division 23.

.3 Initial pneumatic leak test:

.1 Conduct an initial pneumatic leak test to locate and repair major leaks.

(a) test pressure for ASME B31.1 systems: 175 kPa (25 psig),

(b) test pressure for ASME B31.9 systems: 70 kPa (10 psig).

.2 Remove compressed air source and maintain this pressure for the time necessary to inspect for leaks, but not less than 2 hours.

.3 Maintain pressure and examine each joint with commercial leak detector solution.

Standard of Acceptance

- Snoop
- Leak-tec

.4 Repair leaks where found prior to performing hydrostatic pressure tests.

.5 During pneumatic pressure tests, comply with the site safety requirements for notification and guarding during testing with compressed gasses.

.4 Final hydrostatic pressure test:

.1 Use the system design pressure for the entire installation, unless different design pressures are indicated for each floor.

.2 Pressure test condensate piping to the same test conditions as the steam system to which they are connected.

.3 Fill the system with water and gradually increase the system pressure to 150% of the design pressure and hold for 10 minutes, then reduce pressure to the design pressure.

.4 Inspect each pipe joint for leaks.

.5 As an alternative to inspection of each joint for leaks, conduct a 24 hour standing pressure test:

(a) raise the water pressure to 150% of the design pressure for 10 minutes, then reduce pressure to design pressure,

(b) record the test pressure one (1) hour after establishing the system hydrostatic test pressure at the design pressure. Record ambient air temperature at the same time.

(c) at the end of the 24 hour standing test period, record the test pressure and ambient air temperature. Make adjustments to the measured end-of-test pressure to account for change in fluid density due to change in ambient air temperature,

(d) acceptance criteria: maximum pressure loss over 24 hours not to exceed 1% of test pressure, corrected for ambient temperature,

(e) where acceptance criteria is not met, inspect pipe joints for leaks.

.6 Where leaks are found, repair leaks and retest piping as specified above.

3.4 Pressure Test Report

.1 Maintain a log of all pressure tests, including locating of where leaks have been repaired. Submit the log to the Consultant for review when requesting prior to substantial completion of the Work. Where a piping system is subject to AHJ inspection, provide evidence of such inspection by means of an AHJ inspection report or name of the AHJ inspector and the date they witnessed the pressure test.

3.5 Piping Material Selection Schedule

.1 Provide piping material in accordance with schedule Table 1 at the end of this specification section.

Table 1: Piping and Valve Material and Specification by System Type

Piping System	Abbrev	Pipe Material	Pipe Specification	Valve Specification
Hydronic heating and cooling - closed loop	HTS/R HS/R	Carbon Steel	23 21 13.23	23 05 23.13

Table 1: Piping and Valve Material and Specification by System Type				
Piping System	Abbrev	Pipe Material	Pipe Specification	Valve Specification
(with or without glycol)	LTS/R GHS/R CHS/R GCS/R RV	Copper	23 21 13.33	23 05 23.13
Condenser Water - open-loop	CTS/R	Carbon Steel	23 21 13.23	23 05 23.13
		Stainless Steel	23 21 13.26	23 05 23.16
Cooling Tower Overflow and Drain	DR	Galvanized Steel	23 21 13.23	23 05 23.13
Process Chilled Water	PCHS/R	Carbon Steel	23 21 13.23	23 05 23.13
		Stainless Steel	23 21 13.26	23 05 23.16
Process Cooling Water (with city water back-up)	PCWS/R	Stainless Steel	23 21 13.26	23 05 23.16
Snow Melting (buried)	SMHS/R	Polyethylene	23 21 13.37	23 05 23.13
Instrumentation Piping	---	Stainless Steel	23 26 13	
Underground Steam and Condensate Piping	S-xxx PC-xxx GC	Various	23 22 13.13	23 05 23.23
Distribution Steam, Condensate and Boiler Feedwater	S-xxx PC-xxx GC, HD V, RV	Carbon Steel	23 22 13.23	23 05 23.23
Steam Boiler Plant - Steam, Condensate and Feedwater	S-xxx PC-xxx GC, HD BF, BO CBO, HD, V, RV	Carbon Steel	23 22 13.23	23 05 23.26
Clean Steam, Clean Condensate and Clean Feedwater (no chemical treatment)	CS-xxx CPC-xxx CGC CBF BF, BO CBO V, RV	Stainless Steel	23 22 13.26	23 05 23.29

Table 1: Piping and Valve Material and Specification by System Type				
Piping System	Abbrev	Pipe Material	Pipe Specification	Valve Specification
Non-potable make-up water (no pre-treatment, no added chemicals)	NPWH	Copper	23 21 13.33	23 05 23.13
		Stainless Steel (tube or pipe)	22 11 16.16 or 23 21 13.26	23 05 23.16
Water Pre-Treatment for HVAC Services (softened water and dealkalized water)	SWH DALK	Copper	23 21 13.33	23 05 23.13
		Galvanized Steel	23 21 13.23	23 05 23.13
Chemical Feed (chemical water treatment)	CF, CS	Various	23 25 11	
Instrumentation Piping	---	Stainless Steel	23 26 13	
Compressed Air for HVAC Services	CA-P	Galvanized Pipe	23 21 13.23	23 05 23.13
		Stainless Steel Pipe	23 21 13.26	23 05 23.16
		Copper Tube	22 15 13	22 15 16
		Stainless Steel Tube	23 26 16	
Reverse Osmosis water for HVAC Services	ROS/R-H	Stainless Steel Pipe	23 21 13.26	23 05 23.19
		Stainless Steel Tube	23 26 16	
Equipment and piping system drainage for HVAC liquid systems	DR	Galvanized Steel	23 21 13.23	23 05 23.13
		Copper	23 21 13.33	23 05 23.13
Equipment and piping system drains for steam and condensate system.	DR	Same as associated steam and condensate system.		
Brine	BRS/R	PVC	23 21 13.36	

END OF SECTION

GENERAL-DUTY VALVES FOR HVAC WATER PIPING
23 05 23.13

1 GENERAL

1.1 Scope

.1 Provide valves for general duty service in HVAC water piping systems, including shut-off valves, check valves, and manual balancing valves, for piping systems with a design pressure of 3500 kPa (507 psig) or less and a design temperature of 121°C (250°F) or less.

.2 This specification applies to hydronic heating and cooling water systems (with or without glycol additives) and other piping systems required to be carbon steel pipe, galvanized steel pipe, and/or coper tubing as specified in section 23 05 01, except as otherwise required for specific duty valve in other specification sections.

1.2 Related Sections

.1 Without limiting the scope of work or applicability of other specification sections, the work under this section integrates with or refers to the following specification sections:

.1 20 05 23 General Requirements for Valves

.2 23 05 01 Heating and Cooling Piping Systems

1.3 Submittals

.1 Conform to the requirements of Specification section 20 05 23 except/and as follows.

.2 For double regulating valves, in addition to manufacturer data sheets, submit a schedule listing all double regulating valves and include the following information:

.1 a valve reference number,

.2 valve service (e.g. associated equipment, or distribution piping service by drawing, room, etc.)

.3 associated pipeline size, NPS

.4 valve body size, NPS

.5 specified design flow rate,

.6 valve minimum and maximum flow rate limits,

.7 valve pressure drop at specified design flow rate,

.8 expected valve open position (number of valve turns open, percent valve stroke, etc.)

1.4 Applicable Codes and Standards

.1 Refer to section 20 05 23 and as specified herein.

.2 Where an HVAC liquid piping system is subject to registration as a pressure piping system as identified in specification section 23 05 01, all valves shall have Canadian Registration Numbers in accordance with CSA B51. In the following valve specifications, where the identified model does not have a current CRN, provide a valve of equal or greater performance which has a current CRN from the same manufacturer.

.3 For the purpose of this article, "current CRN" means a registration which does not expire for at least 12 months from the date of submittal of shop drawings.

2 PRODUCTS

2.1 Ball Valves – bronze/brass body

.1 NPS 2 and under:

.1 To MSS SP-110, 600 CWP/150 SWP, two-piece bronze or DZR brass body, full port, solid stainless steel or chrome plated bronze ball, PTFE seat and seals.

.2 Body material:

(a) brass – ASME SB-283 C37700, dezincification conformance to ISO 6509,

(b) bronze – ASME SB-584 C84400.

.3 Handle extensions suitable to clear 50 mm (2 in) pipe insulation thickness.

.4 Required MCPR: 2300 kPa (335 psig) at 121°C (250°F).

.5 Solder ends:

Standard of Acceptance

- Kitz - fig. 59, 69AM-LL
- Apollo - fig. 77-200
- Nibco - fig. S-585-70
- Anvil - fig. 171S

.6 NPT threaded ends.

Standard of Acceptance

- Kitz - fig. 58, 68AM-LL
- Apollo - fig. 77-100
- Nibco - fig. T-585-70
- Anvil - fig. 171N

2.2 Ball Valves – carbon steel body

.1 NPS 2 and under:

.1 To MSS SP-110, 1500 CWP/150 SWP, carbon steel body, regular port, stainless steel or chrome plated carbon steel ball, PTFE seat and seals.

.2 Handle extensions suitable to clear 50 mm (2 in) pipe insulation thickness.

.3 ISO 5211 mounting pad.

.4 Required MCPR: 3500 kPa (507 psig) at 121°C (250°F).

.5 Two-piece body style, NPT threaded ends:

Standard of Acceptance

- Apollo - fig. 89-100
- MAS - fig. CSCR-2
- Velan - fig. S-M1102-SSGA

.6 Three-piece body style, NPT threaded ends:

Standard of Acceptance

- Apollo - fig. 83A-140
- Nibco - fig. TM-590-CS-R-66-FS-LL

- MAS - fig. CSS-F-3N
- Velan - fig. S-K1802-SSGA

.7 Three-piece body style, socket weld ends:

Standard of Acceptance

- Apollo - fig. 83A-240
- Nibco - fig. KM-590-CS-R-66-FS-LL
- MAS - fig. CSS-F-3N-SW
- Velan - fig. W-K1802-SSGA

.2 NPS ½ to NPS 4:

.1 To MSS SP-72, ASME Class rated, carbon steel two-piece split body, full port, stainless steel or chrome plated carbon steel ball, PTFE seat and seals, ASME Class 150 flanged ends.

.2 Handle extensions suitable to clear 50 mm (2 in) pipe insulation thickness.

.3 ISO 5211 mounting pad.

.4 Class 150:

(a) Required MCPR: 1600 kPa (230 psig) at 121°C (250°F).

Standard of Acceptance

- Kitz - fig. 150SCTDZM-N
- Apollo - fig. 88A-200
- Nibco - fig. F-515-CS-F-66-FS
- Velan - fig. SB-150

.5 Class 300:

(a) Required MCPR: 3500 kPa (507 psig) at 121°C (250°F).

Standard of Acceptance

- Kitz - fig. 300SCTDZM-N
- Apollo - fig. 88A-900
- Nibco - fig. F-535-CS-F-66-FS
- Velan - fig. SB-300

2.3 Globe Valves

.1 NPS 2 and under:

.1 To MSS SP-80, Class 150, bronze body, renewable PTFE composition disc, union bonnet, and lockshield handles where shown.

(a) Required MCPR: 1600 kPa (230 psig) at 121°C (250°F).

(b) Solder ends.

Standard of Acceptance

- Kitz - fig. 10
- Crane - fig. 1310 (class 300)
- Jenkins - fig. 106BPJ (class 300)
- Nibco - fig. S-235-Y

(c) NPT threaded ends.

Standard of Acceptance

- Kitz - fig. 09
- Crane - fig. 7TF
- Jenkins - fig. 106BJ
- Nibco - fig. T-235-Y

.2 To MSS SP-80, Class 300, bronze body, hardened stainless steel plug, renewable seat and union bonnet, with NPT threaded ends.

(a) Required MCPR: 3500 kPa (507 psig) at 121°C (250°F).

Standard of Acceptance

- Kitz - fig. 17S
- Crane - fig. 382P
- Jenkins - fig. 592J
- Nibco - fig. T-276-AP

.3 To ASME B16.34, Class 800, forged steel body, bolted bonnet, hard faced disc and seat ring, with NPT threaded ends.

(a) Required MCPR: 12 MPa (1740 psig) at 121°C (250°F).

Standard of Acceptance

- Crane - fig. B3644XU-T
- Powell - fig. LG08TA58GB
- Beric - fig. 502-T-X-8-A-08

.2 NPS 2½ and over, flanged:

.1 To MSS SP-85, Class 125, cast iron body, bronze trim, OS & Y bolted bonnet, bronze disc and seat ring, flat faced flanges,

(a) Required MCPR:

i) NPS 2-12: 1200 kPa (174 psig) at 121°C (250°F).

ii) NPS 14-24: 860 kPa (125 psi) at 121°C (250°F).

Standard of Acceptance

- Kitz - fig. 76
- Crane - fig. 351
- Jenkins - fig. 2342J
- Nibco - fig. F-718-B

.2 To ASME B16.34, Class 300, ASTM A216 Gr WCB cast steel body, 13% chrome stellite trim, OS & Y, bolted bonnet, and raised face flanges.

(a) Required MCPR: 3500 kPa (507 psig) at 121°C (250°F).

Standard of Acceptance

- Kitz - fig. 300SCJS
- Crane - fig. 151XU
- Jenkins - fig. J1042B2
- Powell - fig. 3031-FC8G
- Beric - fig. 203-RF-EA08-H

2.4 Gate Valves

.1 NPS 2 and under:

.1 To MSS SP-80, Class 150 with bronze body, OS&Y rising stem, bronze wedge disc and union or screw-in bonnet, and NPT threaded ends.

(a) Required MCPR: 1600 kPa (230 psig) at 121°C (250°F).

Standard of Acceptance

- Kitz - fig. 42
- Crane - fig. 431UB
- Nibco - fig. T-131

.2 To MSS SP-80, Class 300, bronze body, OS&Y rising stem, copper nickel alloy or stainless steel trim, solid wedge disc, union bonnet, and NPT threaded ends.

(a) Required MCPR: 3500 kPa (507 psig) at 121°C (250°F).

Standard of Acceptance

- Kitz - fig. 37
- Crane - fig. 622E
- Jenkins - fig. 2280UJ
- Nibco - fig. T-174-A

.3 To ASME B16.34, Class 800, forged steel body, standard port, OS&Y rising stem, solid wedge disc, bolted bonnet, and NPT threaded ends.

(a) Required MCPR: 12 MPa (1740 psig) at 121°C (250°F).

Standard of Acceptance

- Bonney Forge - fig. HL-11-T
- Crane - fig. B-3604XU-T
- Powell - fig. GA08TA58GB
- Beric - fig. 501-T-X-8-A-02

.2 NPS 2½ and over, flanged:

.1 To MSS SP-70, Class 125, cast iron body, OS&Y rising stem, flat faced flanges, bronze trim, and bolted bonnet, and flat-faced flanges.

(a) Required MCPR:

i) NPS 2-12: 1200 kPa (174 psig) at 121°C (250°F).

ii) NPS 14-24: 860 kPa (125 psi) at 121°C (250°F).

Standard of Acceptance

- Kitz - fig. 72
- Crane - fig. 465½
- Jenkins - fig. 454J
- Nibco - fig. F-617-O

.2 To ASME B16.34, Class 300, ASTM A216 Gr WCB cast steel body, OS&Y rising stem, flexible disc, 13% chrome stellite trim, bolted bonnet, and raised face flanges.

(a) Required MCPR: 3500 kPa (507 psig) at 121°C (250°F).

Standard of Acceptance

- Kitz - fig. 300SCLS
- Crane - fig. 33XU-F
- Jenkins - fig. J1010B8F
- Powell - fig. 3003-FC8G
- Beric - fig. 103-RF-AA08-H

2.5 Butterfly Valves – Low Pressure (type "LP")

.1 NPS 2½ to NPS 24, for flange installation:

.1 To MSS SP-67, ductile or cast iron flange-less lug body style, flange holes drilled and tapped for ANSI 150 flange pattern.

.2 Stainless steel shaft, bronze or ductile iron disc with nickel chrome seating edge and replaceable EPDM resilient seat to provide bubble tight shut-off under system pressure from either side with flange removed from un-pressurized side.

.3 ISO 5211 mounting pad.

.4 Locking handles up to NPS 4, and gear operators for NPS 6 and over.

.5 Required MCPR:

(a) NPS 2 to 12: 1380 kPa (200 psig) at 107°C (225°F).

(b) NPS 14 to 24: 1030 kPa (150 psig) at 107°C (225°F).

Standard of Acceptance

- Nibco - fig. LD-2000
- Crane - fig. Center Line RS-200
- Kitz - fig. 6100 series
- DeZurik - fig. BOS-US
- Bray - fig. 31H
- Watts - fig. BF-03-M2
- MAS - fig. D series

.2 NPS 2½ to 12, for grooved end pipe:

.1 To CSA B242, malleable or ductile iron body with corrosion inhibiter finish, with grooved ends.

.2 Stainless steel shaft, aluminum-bronze or nickel plated ductile iron or EPDM encapsulated ductile iron disc, and replaceable EPDM resilient seat for bi-directional flow and bubble tight shut-off under system pressure.

.3 ISO mounting pad.

.4 Locking handles up to NPS 4, and gear operators for NPS 6 and over.

.5 Required MCPR: 1380 kPa (300 psig) at 107°C (225°F).

Standard of Acceptance

- Victaulic - fig. 761 Vic-300
- Gruvlok - fig. 7700 series

.3 NPS 14 to NPS 24, for grooved end pipe:

.1 To CSA B242, ductile iron body with corrosion inhibiter finish, with grooved ends.

.2 Stainless steel shaft, corrosion-inhibiter encapsulated ductile iron disc with offset design, and replaceable EPDM resilient sealt for bi-directional flow and bubble tight shut-off under system pressure.

.3 ISO mounting pad.

.4 Gear operator.

.5 Required MCPR: 2065 kPa (300 psig) at 107°C (225°F).

Standard of Acceptance

° Victaulic - fig. AGS Vic-300 W709

2.6 Butterfly Valve - High Pressure (type "HP")

.1 NPS 2½ to NPS 36:

.1 To MSS SP-68, high pressure offset-disc type, carbon steel lug body with flange bolt holes drilled and tapped, suitable for single flange connection to ASME/ANSI B16.5 flanges (NPS 24 and under) and ASME/ANSI B16.47 Series A flanges (NPS 30 to NPS 48).

.2 316 or 17-4 stainless steel disc and shaft, PTFE seat, bi-directional bubble tight shut-off under system pressure for dead-end service with flange removed from one side.

.3 ISO 5211 mounting pad.

.4 Locking handles up to NPS 4, and gear operators for NPS 6 and over.

.5 Class 150 valve (NPS 2½ to 36):

(a) Required MCPR: 1600 kPa (230 psig) at 121°C (250°F).

Standard of Acceptance

° DeZurik - fig. BHP
° Crane - fig. Flowseal 3LA series
° Apollo - fig. 230L
° WKM - fig. DynaCentric
° Nibco - fig. LCS-6822
° Keystone - fig. K-Lok 36
° Nibco SureSeal - fig. G1L
° Bray - fig. McCannalok

.6 Class 300 valve (NPS 2½ to NPS 24)

(a) Required MCPR: 3500 kPa (507 psig) at 121°C (250°F).

Standard of Acceptance

° DeZurik - fig. BHP
° Crane - fig. Flowseal 3LA series
° Apollo - fig. 230L
° WKM - fig. DynaCentric
° Nibco - fig. LCS-7822
° Keystone - fig. K-Lok 37
° Bray - fig. McCannalok

2.7 Inline Silent Check Valves

.1 NPS 2 and under, bronze, threaded:

.1 To MSS SP-80, Class 125, bronze body, spring-controlled inline style (non flapper), body guided disc, resilient EPDM or PTFE seat or disc; bronze, Inconel or stainless steel spring; with NPT threaded ends.

.2 Required MCPR: 1200 kPa (174 psig) at 121°C (250°F).

Standard of Acceptance

- Kitz - fig. 36
- Nibco - fig. T-480-Y
- Apollo - fig. CVBB 61-500
- Valmatic - fig. 1400THR

.2 NPS 2 ½ to NPS 12, wafer style:

.1 To MSS SP-125, Class 125 or 150, cast or ductile iron body, stainless steel trim and spring-controlled inline globe-style (non flapper), body guided disc, resilient BUNA-N seat, wafer body style for installation between flat-faced flanges.

.2 Valve design provides both a metal-to-metal and metal-to-resilient seat for zero leakage sealing.

.3 Required MCPR: 1200 kPa (174 psig) at 65°C (150°F).

Standard of Acceptance

- Dezurik - fig. APCO 300 Series
- Valmatic - fig. 1400A series
- Mueller - fig. 101MAT
- Nibco - fig. W-910

.3 NPS 2½ to NPS 24, flanged ends:

.1 To MSS SP-125, Class 125 or 150, cast or ductile iron body, stainless steel trim and spring-controlled inline globe-style (non flapper), body guided disc, resilient BUNA-N seat, with Class 125/150 flanges.

.2 Valve design provides both a metal-to-metal and metal-to-resilient seat for zero leakage sealing.

.3 Required MCPR:

i) NPS 2-12: 1200 kPa (174 psig) at 65°C (150°F).

ii) NPS 14-24: 860 kPa (125 psi) at 65°C (150°F).

Standard of Acceptance

- Dezurik - fig. APCO 600 Series
- Valmatic - fig. 1800 series
- Mueller - fig. 107MAT
- Nibco - fig. F-960

.4 NPS 2½ to NPS 24, carbon steel, flanged:

.1 To MSS SP-126, Class 150 and 300, ASTM A216 WCB carbon steel body, stainless steel trim and spring-controlled inline globe-style (non flapper), body guided disc, stainless steel seat, with Class 150 / 300 flanges.

.2 Valve design provides both a metal-to-metal and metal-to-resilient seat for zero leakage sealing.

.3 Required MCPR: 3500 kPa (507 psig) at 121°C (250°F).

Standard of Acceptance

- Dezurik - fig. APCO 600 Series
- Durabla - fig. GLC
- Mueller - fig. 109MDT

2.8 Swing Check Valves

.1 NPS 2 and under:

.1 To MSS SP-80, Class 125, bronze body, bronze swing disc, screw in cap, regrindable seat.

(a) Required MCPR: 1200 kPa (174 psig) at 121°C (250°F).

(b) Soldered ends

Standard of Acceptance

° Kitz - fig. 23
° Crane - fig. 1342
° Jenkins - fig. 4093J
° Nibco - fig. S-413-B

(c) NPT threaded ends:

Standard of Acceptance

° Kitz - fig. 22
° Crane - fig. 37
° Jenkins - fig. 4037J
° Nibco - fig. T-413-B

.2 To MSS SP-80, Class 300, bronze body, bronze swing disc, screw in cap, regrindable seat, with NPT threaded ends.

(a) Required MCPR: 3500 kPa (507 psig) at 121°C (250°F).

Standard of Acceptance

° Kitz - fig. 19
° Crane - fig. 76E
° Jenkins - fig. 4962J
° Nibco - fig. T-473-B

.2 NPS 2½ to NPS 10, cast iron, flanged

.1 To MSS SP-71, Class 125, cast iron body, flat faced flange, renewable bronze seat ring, bronze disc, bolted cap, with ASME Class 125 flanged ends.

(a) Required MCPR: 1200 kPa (174 psig) at 121°C (250°F).

Standard of Acceptance

° Kitz - fig. 78
° Crane - fig. 373
° Jenkins - fig. 587J
° Nibco - fig. F-918-B

.3 NPS 2 to NPS 30, carbon steel, flanged:

.1 To ASME B16.34, Class 300, ASTM A216 Gr WCB cast steel body, renewable stainless steel seat ring, stainless steel or 13% Cr overlay disc, bolted cap.

(a) Required MCPR: 3500 kPa (507 psig) at 121°C (250°F).

Standard of Acceptance

° Kitz - fig. 300SCOS

- Crane - fig. 159XU
- Beric - fig. 303-RF-EA08

.4 NPS 2 to NPS 12, for grooved end pipe

.1 Ductile iron body, ductile iron or bronze disc, nickel seat, EPDM liner, stainless steel spring, with grooved ends.

.2 Required MCPR: 2000 kPa (290 psig) at 110°C (230°F)

Standard of Acceptance

- Victaulic - fig. 716H/716
- Gruvlok - fig. 7800

2.9 Double Regulating Valves ("DRV")

.1 NPS 3 and under:

.1 Bronze or DZR brass body, plug type stem with flow measurement ports and tamper-proof setting.

.2 NPT threaded or soldered ends.

.3 Required MCPR: 1500 kPa (215 psig) at 121°C (250°F) water temperature.

Standard of Acceptance

- S.A. Armstong - fig. CBV
- Victaulic - fig. 787
- Bell and Gossett - fig. Circuit Setter Plus
- Preso - fig. B-Plus
- Nexus - fig. UltraMB(NL)
- Red White - fig. 9517

.2 NPS 2½ to NPS 12:

.1 Cast or ductile iron body, copper alloy trim, with flow measurement ports, tamper-proof setting, with groove or Class 250/300 flanges.

.2 Required MCPR: 1720 kPa (250 psig) at 110°C (230°F)

Standard of Acceptance

- S.A. Armstrong - fig. CBV II
- Victaulic - fig. 788/789
- Preso - fig. B-PLUS
- Nexus- fig. UltraMB
- Red White - fig. 9519

.3 Flow meter for DRVs

.1 Differential pressure gauge with calibrated chartes or direct digital flow meter type.

.2 Hose and fittings to suit manual double regulating valves.

.3 In addition to equipment and materials used during start-up and testing, supply one complete set of clean un-used calibrated flow charts or one (1) digial flow meter, to the owner at the completion of the project.

2.10 Plug Valves with Flow Balancing Ports

.1 NPS 6 to 24, flanged:

.1 To MSS SP-78, cast or dutile iron body, lubricated bronze or nickel plated cast iron plug, lubrication assembly, short pattern, with Class 125 flat-face flange ends.

.2 Two pressure test ports with pet cocks for differential pressure measurement, and calibrated flow charts.

.3 Worm gear operator with memory stop.

.4 Class 125:

(a) Required MCPR:

i) NPS 2-12: 1200 kPa (174 psi) at 121°C (250°F)

ii) NPS 14-24: 1000 kPa (145 psi) at 121°C (250°F)

Standard of Acceptance

° Hattersley - fig. 611
° DeZurik - fig. Hilton Balancing Valve

.5 Class 250:

(a) Required MCPR:

i) NPS 2-12: 2700 kPa (390 psi) at 121°C (250°F)

ii) NPS 14-24: 1700 kPa (245 psi) at 121°C (250°F)

Standard of Acceptance

° Hattersley - fig. 602
° DeZurik - fig. Hilton Balancing Valve

2.11 Triple Duty Valves

.1 Combination discharge non-slam check valve, isolation valve and balancing valve (“triple-duty”).

.2 NPS 1-1/4 to NPS 2:

.1 Ductile iron body, Class 125, non-slam bronze disc with stainless steel spring, EPDM seat ring, plug type stem, flow measurement ports, tamper-proof setting, with NPT threaded ends.

.2 Required MCPR: 900 kPa (130 psig) at 110°C (230°F)

Standard of Acceptance

° S.A. Armstrong - fig. FLO-TREX FTV-T
° ITT Bell & Gossett

.3 NPS 2 to NPS 12:

.1 Cast or ductile iron body, non-slam bronze disc with stainless steel spring, EPDM seat ring, plug type stem, flow measurement ports, tamper-proof setting, with flanged or groove pipe ends.

.2 Class 125 required MCPR: 900 kPa (130 psig) at 110°C (230°F)

.3 Class 250 required MCPR: 2070 kPa (300 psig) at 110°C (230°F)

Standard of Acceptance

° S.A. Armstrong - fig. FLO-TREX FTV series
° ITT Bell & Gossett

3 EXECUTION

3.1 General

.1 Refer to section 20 05 23 and as required herein.

3.2 Valve Selection Based on Pressure Rating

.1 Unless otherwise specified herein or shown, select valves that have a Minimum Component Pressure Rating (MCPR) which exceed the applicable piping system Design Pressure and Design Temperature specified in section 23 05 01.

.2 Where drawings indicate either: (a) a pressure rating; or (b) a pressure rating and Class rating, by floor level then select valves as follows:

.1 For all valves, select a valve with a MCPR rating equal to or greater than the pressure rating indicated on the drawings for each floor level.

.2 For clarity, even if a valve has an ASME Class rating, do not select a valve based on its Class to match any Class rating shown on the drawings.

3.3 Butterfly valves

.1 Where butterfly valves are used, provide high pressure HP type butterfly valves as follows:

.1 at hot water boiler inlet and outlet connections,

.2 at refrigeration equipment evaporator and condenser water inlet and outlet connections,

.3 where valves are installed in pipe risers in vertical service shafts,

.4 where valves are used to isolate piping service to a building,

.5 as required based on valve size and pressure ratings, or

.6 at other locations as shown on drawings.

.2 For butterfly valves with automatic control actuators, select RS or HP type valves as required so that valve torque requirements do not exceed 75% of installed valve actuator torque rating.

3.4 Check Valves

.1 Provide an inline silent check valve on the pump discharge under any of the following conditions:

.1 multi-parallel pump installation,

.2 where the pump discharge piping rises to more than 5 m (15 ft) above the pump discharge, and

.3 at other locations as shown on drawings.

.2 Provide an inline silent check valve where a check-valve is shown on drawings other than at a pump discharge.

.3 Provide swing check or silent check valves at other locations.

3.5 Double Regulating Valves Installation

.1 Consult with double regulating valve manufacturer to ensure correct valve selection. Balancing valves to be sized according to design flow rate.

.2 Size and select valves for flows as shown, based on at 6 kPa (2 ft) pressure drop across the valve in the fully open position, and in accordance with manufactures recommendation. Table 1 identifies the nominal valve size selection:

Table 1: Double Regulating Valve Nominal Sizing				
Valve Size NPS	Nominal Flow			
	Min.	Max.	Min.	Max.
	L/s	L/s	gpm	gpm
½	0.038	0.177	0.6	2.8
¾	0.126	0.379	2.0	6.0
1	0.246	0.631	3.9	10.0
1-¼	0.316	0.947	5.0	15.0
1-½	0.416	1.262	6.6	20.0
2	0.795	2.272	12.6	36.0
2-½	2.398	6.310	38.0	100.0
3	1.956	8.203	31.0	130.0
4	4.291	12.620	68.0	200.0
5	5.679	20.192	90.0	320.0
6	11.48	28.395	182.0	450.0
8	23.16	51.742	367.0	820.0
10	34.07	82.030	540.0	1300.0
12	60.58	94.650	960.0	1500.0

.3 Install double regulating valves with five pipe diameters of straight pipe on inlet side, two pipe diameters on outlet side and 10 pipe diameters from any pump.

.4 Install double regulating valves with ports facing horizontal or facing up. Do not install with ports facing down to prevent debris from falling and accumulating inside the ports.

End of Section

Master revised: 7 March 2023

TESTING ADJUSTING AND BALANCING FOR HVAC
23 05 93.13

1 GENERAL

1.1 Scope

.1 Test, adjust, and balance ("TAB") air handling systems and hydronic systems installed, modified or extended as part of this work, including:

.1 air handling systems, including air handling units and ventilation fans,

.2 hydronic systems:

(a) heating and cooling equipment and piping systems,

(b) boiler feedwater pumps and central condensate receiver transfer pumps,

(c) process equipment and liquid piping systems.

.2 Refer to Specification section 22 05 93 for TAB for plumbing systems.

1.2 Related Sections

.1 Without limiting the scope of work or applicability of other specification sections, the work under this section directly integrates with or refers to the following specification sections:

.1	22 05 93	Testing Adjusting and Balancing for Plumbing
.2	23 05 93.16	Testing, Adjusting and Balancing for Smoke Management Systems
.3	23 05 93.23	Testing, Adjusting and Balancing Supplement for Healthcare
.4	23 05 93.26	Testing, Adjusting and Balancing Supplement for Laboratories
.5	23 33 05	Duct Accessories

1.3 Definitions and Abbreviations

.1 The following definitions apply to this section.

.1 ***Induction units*** – means a room air distribution device which uses primary supply air at high pressure to entrain room air into the primary airflow to create a room mixed supply airflow and may or may not include a cooling or heating coil.

.2 ***Process cooling (loads) –*** means cooling equipment dedicated to a specific process equipment cooling load, and such cooling is not intended for human comfort.

.3 ***Terminal inlet*** – means a room or space return air or exhaust air grille, or other exhaust air inlet connection.

.4 ***Terminal outlet*** - means a room or space supply air grille or diffuser,

.5 ***Terminal unit*** – means a manufactured automatic airflow control-damper unit intended to control airflow to a space or a zone, with or without a reheat coil.

(a) ***Constant Air Volume terminal unit (CAV)*** – means a terminal unit where the airflow control damper is automatically controlled to maintain a constant supply airflow, and space temperature control is by other means.

(b) ***Exhaust Air Volume terminal unit (EAV)*** – means a terminal unit used to control return or exhaust air flow from a room or space, where the automatic control damper is operated to regulate space pressure.

(c) ***Variable Air Volume terminal unit (VAV)*** – means a terminal unit where the airflow control damper is automatically controlled to vary supply airflow to maintain space temperature.

(d) ***Limited VAV terminal unit (VAVLM)*** – a terminal unit that operates as a VAV at maximum cooling or heating demand under temperature control, and as a CAV at other times to maintain a minimum airflow rate to the room or space. For clarity, the CAV function occurs during normal occupancy times.

.6 ***Zone*** – means rooms or spaces, or portion thereof, that defines the supply air and return/exhaust air flow being evaluated.

.2 The following abbreviations apply to this section:

.1 ***CAABC*** Canadian Associated Air Balance Council

.2 ***NEBB*** National Environmental Balancing Bureau

1.4 Applicable Codes and Standards

.1 Installation codes and standards:

.1	ANSI/ASHRAE 41.2	Standard Methods for Air Velocity and Airflow Measurement
.2	ANSI/ASHRAE 111	Measurement, Testing, Adjusting, and Balancing of Building HVAC Systems
.3	SMACNA	HVAC Systems Testing, Adjusting, & Balancing
.4	AABC	National Standards for Total System Balance
.5	NEBB	Procedural Standards for Testing, Adjusting and Balancing of Environmental Systems

1.5 Qualified Tradesperson

.1 Work to be performed by qualified, licensed and recognized firm with an established reputation in this field, using tradesperson holding applicable certificates of competency.

.2 Balancing to be performed under supervision of recognized expert with an established reputation in this field.

.3 TAB contractor to be a member of CAABC or NEBB.

1.6 Quality Control

.1 Perform testing and balancing in accordance with procedures as published by ASHRAE, SMACNA, AABC or NEBB except/and as specified herein.

1.7 Accuracy

.1 Adjust systems until operating values are within the acceptance criteria stated for each system type. Where an acceptance criterion is not stated, balance the system so that measured values are within ±5% of design value.

.2 Measurement device accuracy:

Measurement	Application	Device	Accuracy
Air Flow	Plenums	Revolving Vane Anemometer, direct reading digital type	± 5.0% of reading over 1 m/s
Air Flow	Ducts	Pitot-tube duct traverse with electronic gauge	± 10.0% of reading over 5 m/s

Measurement	Application	Device	Accuracy
Air Flow	Grilles and Diffusers	Revolving Vane Anemometer, direct reading digital type	± 5.0% of reading
Air Flow	Room air currents, Hoods (0.05 to 3.0 m/s)	Thermal Anemometer	± 10.0% of reading
Liquid Flow	Piping	Installed meter	As per meter rating
Liquid Flow	Equipment	Differential Pressure and equipment data	See below
Temperature	Air, Liquids	Digital Electronic Thermometer	± 0.2°C over 0 to +40°C
Temperature	Air, Liquid	Digital Electronic Thermometer	± 0.4°C < 0°C and >+40°C
Relative Humidity	Air	Digital Electronic Humidity Sensor	± 1.5%RH over 0 to 90%RH range
Pressure	Air	Magnahelic	± 2.0% of reading
Pressure	Liquid, Gas, Steam	Bourbon type	± 1.0% of reading
RPM	Motor, fans	Chronometer tachometer	± 1.0% of reading
Voltage	All	Portable	± 2.5% of reading
Current	All	Portable clamp-on ammeter	± 2.5% of reading

1.8 Audit Verification

.1 After review of the draft TAB report by Consultant, the Consultant may at their sole discretion require re-measurement of TAB results on an audit sample rate of 10 percent of all measured equipment, at no cost extra to the Contract Price or change to project schedule.

.2 If audited results indicate a variance of more than 10% between the original reported value and the audit measured value for a piece of equipment, re-balance the audited device. If this excessive variance condition occurs at more than 25% of the number of audited equipment samples, re-balance the entire affected system at no cost extra to the Contract Price or change to project schedule.

1.9 Preparatory Work

.1 Develop a TAB work plan to communicate TAB requirements to other trades:

.1 Review design drawings and specifications, shop drawings, interference drawings and other related documentation to become familiar with their intended performance.

.2 Prior to commencement of piping and ductwork installation, mark-up Consultant's Contract Drawings or contractor's fabrication drawings to identify locations where balancing damper and valve devices, temperature wells, pipe pressure gauges and pressure test plugs are to be installed. Provide a copy to the trade contractor responsible for installation of balancing devices. Make a copy available for review when requested by Consultant.

.2 Carry out site visits during later stages of construction to ensure that arrangements for TAB are incorporated. Confirm proper placement of thermometer wells, test ports, pressure gauge cocks, balancing valves, balancing dampers and splitter dampers, and access doors.

.3 TAB measurements to commence when building is “closed in” and work is sufficiently advanced including;

.1 installation of ceilings, doors and windows is completed,

.2 application of sealing, caulking, and weather stripping is completed,

.3 allowing normal operation of mechanical systems.

1.10 Pre-Construction Air and Water Measurement Audit

.1 Conduct an HVAC air and water audit of existing HVAC systems prior to commencement of demolition or new construction work.

.2 Measure existing air conditions for the systems affected by the Work:

.1 measure airflow, pressure, and temperature at main supply and return ducts on each floor where Work is to be performed,

.2 for fans, measure airflow, motor amps, motor HP rating, motor volts, inlet and discharge static pressure, sheave position,

.3 for air handling unit systems including air conditioning units, measure total airflow, outdoor airflow, return airflow; outdoor, return air and supply air temperatures.

.3 Measure existing service water conditions for the systems affected by the Work:

.1 measure water flow at on each floor where Work is to be performed,

.2 for each source equipment including chillers and boilers, measure inlet and outlet water pressure, inlet and outlet water temperature, water flow rates,

.3 for each pump, measure water flow rate, inlet and outlet static pressures, motor amps, motor rated HP, motor voltage.

.4 Submit a report to Consultant to record all as-found measured values.

1.11 Measurement Parameters

.1 Reporting units of measure:

Parameter	Unit	Abbreviation
Mass	kilogram	kg
Length	metre	m
Volume	litre	L
Volume flow rate	Litres per second	L/s
Time	seconds	s
Temperature	Celsius	°C
Pressure	pascal	Pa (air)
	kilopascal	kPa (liquid, vapour, compressed gas)
Pump Head	metre	m
Pump Pressure	kilopascals	kPa
Fan pressure	pascal	Pa

Parameter	Unit	Abbreviation
Mass flow rate	kg per second	kg/s
Heat flow rate	kilowatts	kW
Cooling flow rate	Kilowatts cooling	kWc
Electrical Power	kilowatts	kW
Voltage	Volts	V
Electrical Current	amps	A
Rotation speed	Rotations per minute	RPM
Vibration	Cycles per second	CPS or Hz

1.12 Submittals

.1 Submit TAB reports in accordance with Part 7 of this section.

2 PRODUCTS

2.1 Ductwork Probe Test Plugs

.1 Conform to Specification section 23 33 05.

3 EXECUTION - AIR MOVING SYSTEMS

3.1 Measurement Parameters

.1 The following measurement parameters identify the minimum requirements for inclusion in the TAB process:

.1 Air flow parameters;

(a) air velocity,

(b) flow cross sectional area,

(c) static pressure,

(d) velocity pressure.

.2 Temperature parameters;

(a) wet bulb,

(b) dry bulb.

.3 Pressure parameters;

(a) gauge pressure,

.4 Equipment parameters;

(a) rotational speed (rpm),

(b) electrical power, kW

(c) voltage. V

(d) current, A,

.2 Measurement are required at and around equipment to establish air side performance of;

.1 fans,

.2 coils,

.3 filters,

.4 dampers - outdoor, return, recirculating, and relief,

.5 humidifiers.

.6 terminal units.

.3 Measurement are required to characterize system performance;

.1 at main ducts,

.2 at submain ducts,

.3 at branch ducts.

.4 at each supply air outlet diffuser or grille, and exhaust and return air inlet grille,

.5 in each thermostatically controlled zone.

3.2 General Requirements

.1 Balance systems so that fans operate at lowest possible speed and static pressure consistent with delivery of specified air quantity at most remote terminal point.

.2 Measure air quantities at each exhaust system inlet and supply system outlet.

.3 Balance supply fans and associated return fans with their respective outdoor air dampers and exhaust air dampers at their minimum airflow position.

.4 Be responsible for supply and installation of ductwork test plugs.

3.3 Setting Grill and Diffuser Airflow Patterns

.1 Adjust the throw and pattern at each supply outlet as shown on drawings. Where a specific pattern is not shown, set the supply outlet grills and diffusers in accordance with the following;

.1 for rectangular and circular cone diffusers, set for a uniform 360° dispersion,

.2 for rectangular perforated-plate diffusers, set the flow pattern plates for four-direction horizontal dispersion,

.3 for rectangular wall-mount grilles with horizontal front blades, set the blades at an approximate 15° upward facing angle,

.4 for linear diffusers at exterior windows or walls, set the flow pattern blades for a downward flow towards the floor and parallel to the windows or wall,

.5 for linear diffusers in interior spaces within 300 mm (12 in.) of a wall, set the flow pattern blades for horizontal dispersion away from the wall,

.6 for linear diffusers in interior spaces other than close to a wall, set the flow pattern blades for bi-directional horizontal dispersion,

.7 for light-troffer diffusers, set the flow pattern blades for horizontal dispersion away from the light fixture.

3.4 Use of Terminal Unit Flow Stations for Balancing Purposes

.1 Where terminal units are equipped with integral air flow stations, do not use these air velocity stations as a proxy for manual duct traverse measurements of the zone airflow.

3.5 Transient Operating Conditions Preparation

.1 Set-up supply fans with sufficient speed to deliver design air flow when filters are loaded to manufacturers recommended maximum pressure drop (dirty filter condition) and condensing coil air-pressure drop is at its wet coil condition;

.2 Temporarily block portions of filter banks to achieve maximum pressure drop at design air flow, to simulate dirty filters.

.1 only apply blanking material to the highest MERV rated filter in the air handing unit. If there is more than one filter bank, test the remaining filter banks in their clean condition.

.3 Temporarily block portions of cooling coils to achieve rated wet coil pressure drop at design air flow, to simulate summer condensing operation.

.4 Uniformly distribute blocking media across filter face and coil face to minimize disruption to overall airflow pattern through the filter and coil bank.

.5 Remove blanking material at completion of system TAB.

3.6 Fan Performance Assessment

.1 Obtain the measured duct leakage for each system prior to balancing the duct systems and record in the TAB report. An additional 5% of terminal outlet design airflow rates may be included for balancing effects on the fan delivered airflow rate.

.2 Measure air quantity by taking anemometer traverses across a coil or at a filter bank, or by pitot tube traverse in a straight section of duct at fan suction or discharge.

.3 Measure static pressure difference between fan inlet and discharge, motor amperage and fan rotation speed. Determine motor input power from a curve showing power output as a function of motor amperage for the particular motor.

.4 Plot results of measurements on fan characteristic curve supplied by fan manufacturer; the measured air volume, static pressure and fan speed lines should form a triangle enclosed by a rectangle having a dimension of not more than 15% of the design static pressure by a dimension of not more than 10% of the design airflow rate. Input power taken from the fan characteristic should be within 10% of the power determined from the motor amperage readings.

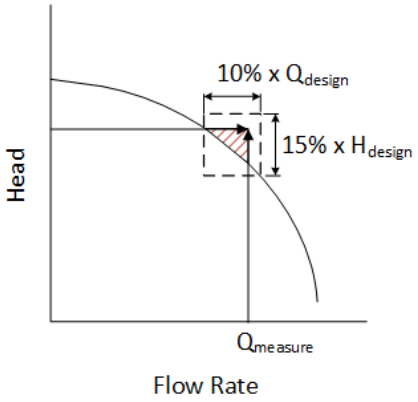

.5 If required precision is not obtained, repeat measurements. If subsequent testing shows that the required precision is unobtainable, then fan manufacturer is to submit written report explaining actual fan performance and provide new characteristic curve showing actual performance for fan “as installed”.

.6 Measure static pressure loss across cooling coils, heating coils and individual filter banks and tabulate readings with manufacturers published pressure loss figures for the actual measured air volume.

3.7 Branch Air Quantity Measurement Procedure

.1 Determine branch air quantities using pitot tube traverses in accordance with the procedures defined in ASHRAE 111 and ANSI/ASHRAE 41.2.

.2 Take measurements at each riser as it is connected to fan discharge or suction header and at each floor where branches are taken from the riser. Repeat measurement until sum of branch air quantities is within 10% of fan delivery.

3.8 Constant Volume System Balancing Procedure

.1 Application:

.1 single zone systems with constant airflow,

.2 constant volume systems using CAV terminal units,

.3 constant volume systems with terminal reheat coils,

.4 exhaust systems, constant airflow,

.2 Where a system has CAV units, or a system has a mixture of no units and CAV units, set the CAV units for 100% design airflow at all times.

.3 Where a system has EAV units, set EAV units to 100% design airflow prior to balancing the supply air system.

.4 First step - balance the branch ducts:

.1 open all supply air terminal outlets and return/exhaust air terminal inlets to 100% full open,

.2 starting with the submain duct closest to the fan or the submain duct that has the highest percentage airflow, measure and balance airflow on each branch duct off that submain duct,

.3 repeat on other submain ducts in descending order of percent of total airflow, until all branch ducts are balanced,

.4 verify supply and return fans are delivering 100% design airflow.

.5 acceptance criteria:

(a) branch airflow measurement: ±5% of design flow.

(b) fan airflow measurement: ±5% of design flow.

.5 Second step - balance airflows at zones:

.1 starting at the most remote zone, balance terminal outlets and inlets using duct balancing dampers ahead of the outlet or inlet device. Only use any integral balancing device in the terminal outlet or inlet to adjust the final airflow rate by not more than 10% of design flow,

.2 for supply grilles and diffusers, adjust airflow pattern controllers to prevent airflow impinging on adjacent walls.

.6 Acceptance criteria:

.1 total of terminal outlets/inlets airflow measurement in each zone: ±10% of design flow.

3.9 VAV System Balancing Procedure

.1 Applicable systems:

.1 variable volume supply air systems using VAV terminal units, with minimum flowrate setpoint set equal to zero airflow.

.2 Obtain from Consultant the expected diversity value or determine the percent diversity by dividing the fan design air flow rate by the sum of all supply outlets or return/exhaust inlet flow rates as applicable.

.3 First step: balance the branch ducts:

.1 set all interior terminal units to 100% design flow rate (full cooling), and proportionally adjust all perimeter terminal units so that the design fan air flow rate is achieved at the supply and return fans,

.2 starting with the submain duct closest to the fan or the submain duct that has the highest percentage airflow, measure and balance airflow on each branch duct off that submain duct/

.3 repeat on other submain ducts in descending order of percent of total airflow, until all branch ducts are balanced.

.4 verify supply and return fans are delivering 100% design airflow.

.5 acceptance criteria:

(a) branch airflow measurement: ±5% of design flow.

(b) fan airflow measurement: ±5% of design flow.

.4 Second step: balance airflows at terminal units:

.1 open sufficient VAV terminal units having the highest airflow demand to 100% maximum design flow rates, and close a random selection of other terminal units, equally distributed throughout the system, to obtain the design fan flow rates.

.2 set system to operate with 100% return air, set room thermostats at design indoor temperature, set fan discharge temperature at design point.

.3 set thermostat in the most remote zone (the “first zone”) to full cooling, open the duct balancing damper serving the terminal unit to full open, and adjust the fan static pressure controller until required airflow is delivered by the terminal unit;

(a) reset the first zone room thermostat to full heating and check performance of terminal unit controller,

(b) after completion of balancing, reset zone thermostat to design temperature and balance next terminal unit.

.4 on the next terminal unit, set thermostat to full cooling, adjust the duct balancing damper serving the terminal unit to obtain the design airflow rate for that unit such that the terminal unit control damper is not less than 60% open at design airflow rate;

(a) do not use the terminal unit controller to consume excess air pressure.

(b) if zone air quantity is less than design, increase fan static pressure controller setting to achieve design air quantity and rebalance previously checked zones.

(c) reset thermostat to design temperature and repeat procedure for remaining terminal boxes,

.5 if the required airflow adjustment to any terminal unit airflow rate is ±5% or less to meet the acceptance criteria for terminal units, then no adjustment is required to nearby terminal units, If the adjustment is greater than 5%, check nearby terminal units and adjust as require to obtain airflow rate at the acceptance criteria.

.5 Acceptance criteria:

.1 VAV terminal unit airflow measurement: ±10% of design flow.

3.10 VAVLM Balancing Procedure

.1 Applicable systems:

.1 partial variable volume supply air systems using VAVLM terminal units, where the terminal unit’s minimum airflow rate setpoint is between zero and the design maximum flow rate setpoint, but is not zero.

.2 Where a system has EAV units, set EAV units to 100% design airflow prior to balancing the supply air system.

.3 Same procedure as for all VAV system specified previously except as follows:

.1 where a VAVLM has minimum airflow setpoint = maximum airflow setpoint, set these units to 100% design airflow at all times,

.2 balance the constant volume VAVLM units first, then balance the modulating VAVLM units per the procedure described above.

.4 After balancing the zone supply terminal units at maximum cooling, adjust the space temperature setpoint to full heating, and verify that modulating VAVLM reduces the airflow to its design minimum airflow setpoint.

.5 Acceptance criteria for VAVLM terminal unit airflow rates:

.1 healthcare facilities: ±5% of design flow.

.2 laboratory facilities: ±5% of design flow.

.3 art galleries: ±5% of design flow.

.4 other facilities: ±10% of design flow.

3.11 Terminal Unit Balancing Procedure

.1 For spaces or zones with ducted return, close the doors to the space and then first balance return/exhaust terminal inlets to design flow rates.

.2 Balance terminal outlets and inlets downstream of terminal units after the associated terminal units and supply, return and exhaust fans have been balanced.

.3 Set system to operate with 100% return air, set zone thermostats at indoor design temperature and set fan discharge temperature at design value. Where a ducted return system is used, open any doors to adjacent spaces in the room under test.

.4 Set thermostat in each zone being balanced to full cooling. Verify terminal unit airflow is suppling 100% design airflow.

.5 Adjust each terminal outlet grille or diffuser to design airflow rates.

.6 Repeat for all other terminal unit zones.

.7 After all terminal unit zones are balanced, check fan performance and adjust fan static pressure controller as required to operate the fans at the minimum static pressure required to achieve terminal unit design airflow rates.

3.12 Outdoor Air Adjustment Procedure

.1 After balancing of supply fan, return fan, and related exhaust fans systems, adjust the outdoor air dampers position to obtain minimum design fresh air quantity.

.2 Measure outdoor air values by duct traverse reading across outdoor air intake, recirculation duct, and exhaust air duct.

.1 Where there is insufficient duct length to provide reliable traverse readings, determination of outdoor air flow rate may be estimated based on a mixed airflow coil or filter bank traverse and measurement of outdoor air, return air, and mixed air temperature, provided the temperature differential between outdoor and return air is at least 11°C (20°F).

.2 Where neither of the above methods can be used, a temporary outdoor air minimum damper position may be set by measuring the pressure drop across the outdoor air damper and estimating the airflow rate based on damper manufacturer pressure drop data. Once outdoor conditions are available, remeasure and reset the outdoor air damper to a minimum position based on mixed air temperature conditions.

.3 Where temperature is used to estimate the balanced minimum outdoor air flow rate, include calculations of same in the balancing report.

.3 After the minimum outdoor air flow rate and damper position have been adjusted, operate the air handling system at 100% outdoor air. Check that supply fan and return fan are operating within 5% of their airflow rate at minimum outdoor air condition.

.1 If the supply or return air flow rates at 100% outdoor air exceed their respective airflow rates at minimum outdoor air condition by more than 5%, adjust the maximum outdoor and exhaust air dampers to reduce their percent opening until the airflow variance is less than 5%.

.2 If the supply or return airflow rates at 100% outdoor air is less than their respective airflow rates at minimum outdoor air condition by more than 5%;

(a) reduce the minimum outdoor damper open position and return damper open position, and increase fan static pressure controller setpoint to re-establish minimum outdoor air flow rate,

(b) recheck the supply or return fan airflow rates at 100% outdoor air damper position.

(c) repeat above adjustment procedure until supply or return air fan airflow rates at 100% outdoor air is within 5% of their respective airflow rates at the minimum outdoor air damper position.

3.13 VFD Setpoint and Fan-Motor Sheave Change

.1 For fans with VFD motor controllers, at completion of system balancing, if the maximum VFD control point is more than 15% below the motor rated operating speed (< 50 Hz on a 60 Hz rated motor frequency), replace the drive sheaves and pulleys so that the motor is operating within 10% of motor rated speed at full load operating conditions.

4 EXECUTION - HYDRONIC SYSTEMS

4.1 Measurement Parameters

.1 The following measurement parameters identify the minimum requirements for inclusion in the TAB process:

.1 volume flow rate,

.2 temperature,

.3 pressure (gauge),

.4 equipment related;

(a) rotational speed (rpm),

(b) electrical power, kW

(c) voltage. V

(d) current, A,

.2 Measurement are required at and around equipment to establish fluid side performance of;

.1 heat exchangers (primary and secondary sides),

.2 coils,

.3 refrigeration equipment (water side),

.4 boilers,

.5 pumps,

.6 PRVs,

.7 makeup (water) systems,

.8 domestic hot water heaters,

.9 humidifiers.

.3 Measurement are required to characterize system performance;

.1 at floor branch connections (where measurement devices are installed),

4.2 General Requirements

.1 Use calibrated venturi tubes, orifices or other metered fittings and pressure gauges in conjunction with permanent and portable type flow meters to determine flow rates for system balance.

.2 Effect system balancing with automatic control valves open to heat transfer elements and bypasses closed.

.3 Check and clean strainers prior to balancing.

.4 Check expansion tanks are not waterlogged, and record expansion tank pressure before and after system pumps are turned On, and again when the system is at design operating temperatures.

.5 Base flow balance on (in order of preference):

.1 double regulating valves, or globe valves associated with flow measuring elements (flow meters),

.2 temporary non-invasive flow meters,

.3 differential pressure measurement across heat transfer elements, with flowrate determined from manufacturer's literature, or

.4 temperature difference across various heat transfer elements in the system where flow metering devices are not installed. This method may only be used at design heat transfer conditions and at least one flow rate is known.

.6 Adjust systems to provide specified pressure drops and flows through heat transfer elements prior to thermal testing.

.7 Perform balancing by measurement of temperature differential in conjunction with air balancing.

.8 Adjust water distribution systems by means of double regulating valves, globe valves, balancing cocks, valves and fittings. Do not use shut-off valves for balancing unless indexed.

.1 Butterfly valves on discharge side of pumps may be used if they are one trade size smaller than system pipe size. Include Cv values and flow vs valve position curve with balancing report.

4.3 Variable Flow Rate Balancing Procedure

.1 Obtain from Consultant the expected diversity value or determine the percent diversity by dividing the pump design flow rate by the sum of all connected loads.

.2 Where available pump capacity is less than total flow requirements of individual system parts, full flow in any part may be simulated by temporary restriction of flow to other parts.

.3 First step - Balance pipe riser floor branches:

.1 applies where floor-branch riser connections are provided with measurable pipe balancing devices,

.2 open all load control valves to 100% open,

.3 run all system pumps and balance the most remote floor-branch balancing device; floor-branch balancing devices on other floors may be partially closed. Adjust pump static pressure controller to supply the minimum required pressure to obtain required flow rate at the floor.

.4 repeat with other floors progressing towards the floor closest to the pump.

.5 acceptance criteria: ±5% of total design flow rate of the branch.

.4 Second step – Balance loads:

.1 balance the most remote load from the branch balancing valve, with other loads on the same branch throttled at the estimated system diversity.

.2 repeat with other load valves on the same branch moving towards the floor balancing device.

.3 Acceptance criteria: ±10% of design flow rate at each load.

4.4 Pressure-Independent Control Valves Balancing Procedure

.1 Where all load connections on a system are equipped with a pressure-independent balancing valve, the preceding balancing procedure may be modified as follows:

.1 open all control valves to 100% open and adjust pump speed or balancing valve to limit pump discharge to not exceed the maximum design flow rate,

.2 starting at the closest valve to the pump, set the pressure-independent control valve to the required flow rate,

.3 proceed with succeeding valves, moving towards away from the pump(s) towards the most remote control valve,

.4 if necessary, manually reduce flow rates through some control valves to obtain sufficient flow for the most hydraulically remote pressure-independent valves,

.5 after the pressure-independent control valves are set, reduce pump speed or adjust pump discharge balancing valve to provide the lowest differential pressure to achieve required total design flow rate.

4.5 Multiple Pump Systems Balancing Procedure

.1 Balance multiple pump systems, which have two (2) or more pumps operating in parallel (not including stand-by pumps), in accordance with the following procedure. In the figure below, the state points are:

"A": individual pump design data.

"1": single pump operation at maximum run-out capacity without motor overload

"2": multi-pump operation, balanced system,

"3": N-1 pumps operating at balanced system demand point,

"4": single pump operating at balanced system demand point.

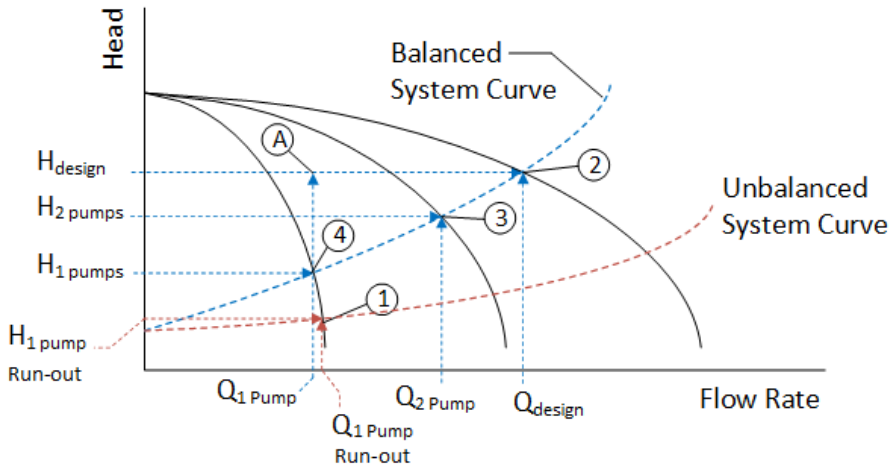

.2 Step 1 – establish single pump maximum run-out condition (unbalanced system):

.1 set all load equipment automatic control valves to 100% open,

.2 start one pump separately and open flow through associated source equipment (chiller, boiler, cooling tower, etc.) and run pump to full speed and open discharge valve to maximum open position without causing pump motor to exceed its power rating. This is point 1 on the figure above.

Record pump flow rate, head, and motor current. Mark this data on a multi-pump curve as maximum run-out condition.

.3 Step 2 - balance pump discharge for all pump simultaneous operation:

.1 open all load valves 100% open,

.2 start-up all pumps which are required for maximum system design capacity along with associated chillers, cooling towers and boilers,

.3 concurrently throttle discharge valve at each pump to obtain total system design flow rate (point 3 in the above figure). Record this value as Maximum Rated Capacity ("MRC"),

(a) for pumps with VFD controllers, before throttling the pump discharge valve, reduce pump speeds until MRC is reached (point 2). If the resulting pump speed is more than 15% below pump maximum speed (50 Hz on a 60 Hz motor), increase pump speed to 50 Hz and then use pump discharge throttling valve to obtain MRC at point 2.

.4 Step 3 – check operating points at reduced number of pumps:

.1 shut-down one pump and check operating point of remaining pumps on their pump curves. Check that the operating point does not cause any remaining pump from operating in a motor overload condition,

.2 repeat by shutting down additional pumps in sequence until one pump remains operating, and record all test values (flow, pressure, RPM and motor kW). Plot operating point on a multi-pump curve.

4.6 Process Cooling Water System Balancing Procedure

.1 Where a cooling system only serves process cooling equipment, balance the process equipment flow rates on a proportional basis using the process equipment cooling capacity multiplied by an equipment type-specific usage factor as follows:

$$Process\ Flow\ Balance = Nameplage\ Flow\ Rate\ x\ Usage\ Factor$$

Process Equipment Type	Cooling Equipment Type	Usage Factor
Main electrical room cooling	Fan coils	0.7
Main data center cooling	CRAH	0.9
Distributed electrical rooms	Fan coils	0.25
Distributed data closets	Fan coils	0.25
Elevator machine room	Fan coils	0.35
Dietary refrigeration equipment	DX condensing unit	0.5
Medical Diagnostic Imaging equipment	DX condensing unit, Heat exchanger	0.9
	Fan coils	0.9

5 EXECUTION - EQUIPMENT TESTING

5.1 Performance Data

.1 Submit the following data as a minimum. If contractor's standard forms provide for additional data, also submit such additional data.

.2 Some equipment tests may need to be performed during the alternate season testing.

.3 Include nameplate data and as-tested results.

.4 Water chillers:

.1 manufacturer and model,

.2 refrigerant type and weight,

.3 cooling rating (refrigeration tons),

.4 condenser:

(a) entering and leaving water temperature,

(b) entering and leaving water pressure,

(c) flow rate (minimum, maximum),

(d) pressure rating (MAWP),

.5 evaporator:

(a) entering and leaving water temperature,

(b) entering and leaving water pressure,

(c) flow rate (minimum, maximum),

(d) pressure rating (MAWP),

.6 motor real power (kW),

.7 motor apparent power (kVA) or power factor (PF).

.5 Hydronic Heating Equipment (Boilers, Heaters, etc.):

.1 manufacturer and model,

.2 heat output rating (kW),

.3 electric power input rating (kW),

.4 gas and fuel oil input flow rating,

.5 gas and fuel oil input pressure rating (minimum, maximum),

.6 gas pressure regulator inlet and outlet pressure,

.7 heat performance:

(a) entering and leaving water temperature,

(b) entering and leaving water pressure,

(c) liquid flow rate (minimum, maximum),

(d) steam flow rate and pressure,

(e) pressure rating (MAWP),

.8 pressure relief valve rating (pressure setpoint, heat rating, steam rating).

.9 combustion efficiency test at maximum rated capacity; including flue gas analysis corrected to 3% O2, for fuel input ratings exceeding 2930 kW (10 MMBtu/h),

.10 thermal efficiency test at maximum rated capacity, based on ASME PTC 4 for steam boilers with fuel input ratings exceeding 2930 kW (10 MMBtu/h),

.6 Condenser water cooling towers:

.1 manufacturer and type,

.2 inlet and outlet air temperature, dry and wet bulb,

.3 inlet and outlet water temperature,

.4 motor, pump and fan information.

.7 Motors:

.1 manufacturer,

.2 model or serial number,

.3 amperage and voltage,

.4 power rating,

.5 service factor,

.6 RPM,

.7 corrected full load amperage,

.8 measured amperage and voltage,

.9 calculated BHP (kW).

.8 Fans:

.1 manufacturer,

.2 model or serial number,

.3 flow rate,

.4 static pressures (suction and discharge),

.5 RPM,

.6 pulley size, type and manufacturer,

.7 belt size and quantity.

.9 Pumps:

.1 manufacturer,

.2 model or serial number,

.3 flow rate,

.4 developed pump head,

.5 RPM.

.10 Heat transfer equipment:

.1 manufacturer and type,

.2 inlet and outlet temperatures,

.3 pressure drop,

.4 design pressure rating (MAWP),

.5 flow rate,

.6 pressure relief valve rating (pressure setpoint, heat rating).

6 EXECUTION – MISCELLANEOUS

6.1 Balance Position Marking

.1 Mark the balance position of dampers and valves at the completion of the final testing:

.1 ductwork: indicate with arrow using paint or permanent marker,

.2 exposed ductwork in public areas: self-adhesive label, placed adjacent to balancing damper, neatly filled in with % open or degree open value.

.3 valves: self-adhesive label, placed on piping (insulated or not) adjacent to valve, neatly filled in with either % valve open, or number of valve turns to open.

.2 Additional requirements for circuit-balancing valves with test ports:

.1 remove valve handle or other protective device, and set memory stop to limit valve open travel. Replace valve handle or protective cover.

7 EXECUTION - REPORT PRESENTATION AND VERIFICATION

7.1 Required Reports

.1 Provide the following reports:

.1 Air and water balancing report,

7.2 Record Keeping

.1 Keep records of trial and final balance and submit preliminary report as each system is completed.

.2 Do not submit the final TAB report until all audit verification re-measurements, and any required re-balancing, is completed to the satisfaction of Consultant.

7.3 Report Format

.1 Reports to incorporate approved standard forms, with values expressed in the same units as shown on Contract Documents.

.2 Include "as-built" system schematics, marked-up to show as-measured flow quantities and measurement points. Use as-built drawings and ventilating line diagrams for reference.

.3 Submit an electronic PDF copy of the draft TAB report for review by Consultant. Where a report page length is more than 20 pages, include bookmarks in the PDF document organizes by system number and/or name.

.4 After any revisions requested by Consultant have been made and final review accepted by Consultant, submit the final TAB report in the following formats:

.1 two (2) hard copies of the completed report, each with index tabs and bound in “D” ring binders,

.2 electronic file PDF copies by email or drop-box as coordinated with Owner and Consultant.

7.4 Completion

.1 Continue TAB until reports are approved.

.2 The Substantial Performance of the Mechanical Work will be considered reached when the initial Start-Up and Performance Testing report is accepted by the Consultant and in the opinion of the Consultant all systems have been satisfactorily installed, operated tested, balanced, and adjusted to meet the specified and intended performance.

.3 The substantial performance of the Work is not dependent upon alternate season testing.

.4 The total performance of the Work will not be considered reached until the alternate season testing and balancing is completed and the final report submitted has been reviewed by Consultant and accepted by the Owner.

END OF SECTION

HYDRONIC PIPING – CARBON STEEL
23 21 13.23

1 GENERAL

1.1 Scope

.1 Provide carbon steel pipe and fittings for HVAC liquid piping systems. Refer to section 23 05 01 for piping system applicability.

.2 This specification applies to liquid piping systems with design pressures not exceeding 2070 kPa (300 psig) at temperatures not exceeding 121°C (250°F), except as otherwise specified.

1.2 Related Sections

.1 Without limiting the scope of work or applicability of other specification sections, the work under this section directly integrates with or refers to the following specification sections:

.1	20 05 24	Welding and Brazing
.2	23 05 01	HVAC Piping Systems General Requirements
.3	23 25 05	HVAC Pipe Cleaning

1.3 Applicable Codes and Standards

.1 Legislation:

.1 Refer to section 23 05 01.

.2 Installation standards and codes:

.1 Refer to section 23 05 01.

.3 Product standards:

.1	ANSI A21.11	Rubber Gasket joints for Ductile-Iron Pressure Pipe and Fittings
.2	ANSI B1.20.1	Pipe Threads, General Purpose (inch)
.3	ASME B16.1	Cast Iron Pipe Flanges And Flanged Fittings
.4	ASME B16.3	Malleable Iron Threaded Fittings.
.5	ASME B16.5	Pipe Flanges and Flanged Fittings
.6	ASME B16.9	Factory Made Wrought Steel Buttwelding Fittings
.7	ASME B36.10	Welded and Seamless Wrought Steel Pipe
.8	ASME B16.11	Forged Steel Fittings, Socket-Welding and Threaded
.9	ASME B16.20	Metallic Gaskets for Pipe Flanges: Ring Joint Spiral Wound and Jacketed.
.10	ASME B16.21	Nonmetallic Flat Gaskets for Pipe Flanges.
.11	ASME B16.39	Malleable Iron Threaded Pipe Unions: Classes 150, 250 and 300.
.12	ASTM A47	Standard Specification for Ferritic Malleable Iron Castings.
.13	ASTM A53	Standard Specification for Pipe, Steel, Black and Hot-Dipped, Zinc-Coated, Welded and Seamless
.14	ASTM A105	Standard Specification for Carbon Steel Forgings for Piping Applications

.15	ASTM A106	Standard Specification for Seamless Carbon Steel Pipe for High-Temperature Service
.16	ASTM A193	Standard Specification for Alloy-Steel and Stainless Steel Bolting Materials for High-Temperature Service
.17	ASTM A194	Standard Specification for Carbon and Alloy Steel Nuts for Bolts for High-Pressure or High-Temperature Service, or Both.
.18	ASTM A536	Standard Specification for Ductile Iron Castings.
.19	CSA B242	Groove and Shoulder Type Mechanical Pipe Couplings

2 PRODUCTS

2.1 Pipe

.1 Carbon steel pipe:

.1 to ASTM A53 Grade B, seamless or electric resistance welded (type “A53”),

.2 to ASTM A106 Grade B (type “A106”),

.2 Pipe wall thickness:

.1 Refer to Schedule A1 appended to the end of this specification section.

.2 Select pipe material and wall thickness/schedule (as defined in ASME B36.10), based on pipe size, design temperature and jointing method.

.3 Acceptable substitutions:

(a) where only type A53 is specified, then A106 may be used,

(b) where only type A106 is specified, then piping with dual certification for meeting both ASTM A53 Grade B seamless and ASTM A106 Grade B seamless may be used.

2.2 Pipe Joints and Fittings

.1 Threaded fittings:

.1 End connections: NPT thread to ANSI B1.20.1.

.2 Fittings: Class 150 and Class 300, malleable iron to ASME B16.3..

.3 Unions: Class 150 and Class 300, malleable iron body with ground joint and bronze face to ASME B16.39.

.4 Threaded joint compound: pulverized lead paste or Teflon pipe tape sealant.

Standard of Acceptance

- Masters Pro-Dope
- Masters Orange or White Tape.

.2 Welding fittings:

.1 Butt weld fittings:

(a) Forged to ASME B16.9,

(b) wall thickness to match pipe,

(c) long radius elbows.

.2 Welding outlet fittings:

(a) forged to ASTM A105,

(b) dimensions and pressure ratings to MSS SP-97, Standard Class for buttwelding branch connection and Class 3000 for threaded or socket welded branch connection,

(c) NPT ends to ASME B1.20.1.

.3 Socket welded fittings:

(a) forged to ASTM A105,

(b) dimensions and pressure ratings to ASME B16.11, Class 3000.

.4 Half couplings:

(a) forged carbon steel to ASTM A105,

(b) dimensions and pressure rating to ASME B16.11, Class 3000 socket weld or threaded ends,

(c) NPT ends to ASME B1.20.1.

.3 Flanges:

.1 Flat-faced cast iron to ANSI B16.1, Class 125.

.2 Raised-face forged carbon steel to ASME B16.5, Class 150 and Class 300, weld neck with wall thickness to match pipe, or slip on type.

.3 Studs and bolts: to ASTM A193, Grade B7,

.4 Nuts: to ASTM A194 Grade 2H or 2HM,

.5 Gaskets to ANSI B16.21, ANSI B16.20 or ANSI A21.11.

Standard of Acceptance

- Chesterton - fig. 100, 195 and 450
- Beldam

3 EXECUTION

3.1 Piping Installation

.1 Refer to section 23 05 01 for piping design criteria and general requirements for piping installation.

.2 Slope main piping horizontal or up in direction of flow nominally at a slope of 1:500 (0.2%);

.1 branch piping to have greater slope,

.2 slope piping up in direction of terminal heating and cooling devices,

.3 where supply and return piping are grouped together and flow is in opposite directions, arrange piping horizontal.

.3 Use eccentric reducers at pipe size changes arranged flat-on-top to assist venting.

.4 Cap ends during construction to prevent entry of foreign matter.

3.2 Class Rated Fittings and Flanges Selection

.1 Select ASME Class rated fittings and flanges in accordance with the following table for design pressure limits at coincident design temperature limits unless otherwise shown on drawings.

Class	Maximum Design Pressure	Maximum Coincident Design Temperature
125 Note [1]	900 kPa (130 psi)	≤ 65°C (150°F)
125	700 kPa (100 psi)	≤ 121°C (250°F)

Class	Maximum Design Pressure	Maximum Coincident Design Temperature
Note [1]		
150	1720 (250 psi)	≤ 38°C (100°F)
150	1400 kPa (200 psi)	≤ 121°C (250°F)
300	3700 kPa (535 psi)	≤ 38°C (100°F)
300	3100 kPa (450 psi)	≤ 121°C (250°F)

Notes:

[1] For flanges only.

3.3 Pipe Joints and Fittings

.1 Make pipe joints as follows.

.1 Piping NPS 2-1/2 and under:

(a) NPT threaded joint to ANSI B1.20.1 and made with Teflon tape or pipe dope, or

(b) socket weld joints.

.2 Piping NPS 2-1/2 and larger:

(a) welded,

(b) flanged.

.3 For clarity, pipe size of NPS 2-1/2 may be either type of joint specified.

.2 For flange joints, select gasket materials in accordance with the following table so that gasket pressure and temperature both exceed the piping system design pressure and design temperature.

Gasket Temperature Limit	**Gasket Pressure Limit**	**Gasket Material**	**Gasket Thickness**	**Chesterton Figure**
80°C (180°F)	1720 kPa (250 psig)	Red rubber	1.6 mm (1/6 in)	100
200°C (390°F)	2400 kPa (350 psig)	Synthetic fiber with nitrile binder	1.6 mm (1/6 in)	450
400°C (750°F)	3700 kPa (535 psig)	Synthetic fiber with nitrile binder	1.6 mm (1/6 in)	195

3.4 Equipment connections

.1 Make pipe connections to equipment as follows:

.1 NPS 2 and smaller: threaded fittings.

.2 NPS 2 ½ and larger:

(a) flanged connections,

(b) grooved end where equipment has compatible factory-prepared grooved ends

.2 Where connection is made to equipment with a threaded fitting, provide a union between the isolation valve and the equipment connection.

3.5 Welding

.1 Comply with section 20 05 24 and as specified herein.

3.6 Branch Connections

.1 Make branch connections to mains in accordance with Table 2a and 2b.

.1 These tables are valid for design pressures up to 2070 kPa (300 psig), without adding reinforcement material where branch pipe is directly welded to the main. For welded branch connections at higher design pressures, use buttweld, socket weld, or integrally reinforced outlet fittings only.

.2 In these tables, the following abbreviations apply.

Abbreviations:

TH	Threaded fitting to ASME B16.3
SW	Socket weld fittings to ASME B16.11
HC	Half coupling to ASME B16.11
BW	Buttweld fitting to ASME B16.9
OF	Reinforced Outlet Fittings to MSS SP-97
DP	Direct welding of Branch Pipe to Main without added reinforcement.

Table 2a – Allowable Branch to Main Connections (NPS 1 to NPS 10)										
Branch NPS	Mains Pipe, NPS									
	1	1-1/4	1-1/2	2	2-1/2	3	4	6	8	10
3/ 4	TH SW	TH SW	TH SW	TH SW	BW SW	BW, OF SW HC DP	BW, OF SW HC DP	BW, OF HC DP	BW, OF HC DP	BW, OF HC DP
1	TH SW	TH SW	TH SW	TH SW	BW SW	BW, OF SW DP	BW, OF SW HC DP	BW, OF HC DP	BW, OF HC DP	BW, OF HC DP
1-1/4	---	TH SW	TH SW	TH SW	BW SW	BW, OF SW DP	BW, OF SW DP	BW, OF HC DP	BW, OF HC DP	BW, OF HC DP
1-1/2	---	---	TH SW	TH SW	BW SW	BW, OF SW DP	BW, OF SW DP	BW, OF HC DP	BW, OF HC DP	BW, OF HC DP
2	---	---	---	TH SW	BW SW	BW, OF SW	BW OF SW DP	BW, OF DP	BW, OF HC DP	BW, OF HC DP
2-1/2	---	---	---	---	BW SW	BW, OF SW	BW, OF SW	BW, OF DP	BW, OF DP	BW, OF DP
3	---	---	---	---	---	BW	BW, OF SW	BW, OF DP	BW, OF DP	BW, OF DP
4	---	---	---	---	---	---	BW	BW, OF	BW, OF DP	BW, OF DP
6	---	---	---	---	---	---	---	BW	BW, OF	BW, OF DP
8	---	---	---	---	---	---	---	---	BW	BW, OF
10	---	---	---	---	---	---	---	---	---	BW

Table 2b – Allowable Branch to Main Connections (NPS 12 to NPS 30)								
Branch NPS	Mains Pipe, NPS							
	12	14	16	18	20	22	24	30
¾ to 2	OF HC DP	OF HC DP	OF HC	OF HC	OF HC	OF HC	OF HC	OF HC
2-1/2	OF DP	OF DP	OF	OF	OF	OF	OF	OF
3	OF DP	OF DP	OF	OF	OF	OF	OF	OF
4	BW OF DP	OF DP	OF	OF	OF	OF	OF	OF
6	BW OF DP	BW OF DP	BW OF	OF	OF	OF	OF	OF
8	BW OF DP	BW OF DP	BW OF	BW OF	BW OF	OF	OF	OF
10	BW OF DP	BW OF DP	BW OF	BW OF	BW OF	BW OF	BW OF	OF
12	BW	BW OF DP	BW OF	BW OF	BW OF	BW OF	BW OF	OF
14	---	BW	BW OF	BW OF	BW OF	BW OF	BW OF	BW OF
16	---	---	BW	BW OF	BW OF	BW OF	BW OF	BW OF
18	---	---	---	BW	BW OF	BW OF	BW OF	BW OF
20	---	---	---	---	BW	BW OF	BW OF	BW OF
22	---	---	---	---	---	BW	BW OF	BW OF
24	---	---	---	---	---	---	BW	BW OF
30	---	---	---	---	---	---	---	BW

.2 Use of Class 3000 half-couplings as a branch connector (“HC”), and direct welding of branch piping to main piping (”DP”), is permitted in accordance with the following requirements:

.1 half-coupling or branch pipe sits on the mains pipe, and does not insert into the main pipe,

.2 the opening size in the main pipe to closely follow the inside diameter of the half-coupling or branch pipe,

.3 half-coupling or branch pipe attachment end is shaped and beveled to closely following the surface of the main pipe, suitable for a pull-penetration weld,

.4 the half-coupling or direct branch pipe is attached with a groove weld and covered with a smooth finishing fillet weld in accordance with the requirements of the applicable piping code.

.3 Where integrally reinforced outlet fittings, half-couplings or direct welding of branch pipe is used, hole saw or drill and ream mains pipe to maintain full inside diameter of branch line prior to welding.

.4 Where multiple branch pipes are to connect to the main pipe in close proximity to each other, provide a minimum separation between the centerlines of adjacent branch pipes equal to or greater than the sum of the OD dimensions of the adjacent branch pipes.

.5 If threaded fittings have been installed where the specification requires welded fittings, either cut-out and replace the fitting, or fully seal-weld the exposed threads.

.6 Where saddle type branch welding fittings are used on mains, hole saw or drill and ream main to maintain full inside diameter of branch line prior to welding.

3.7 Pressure Testing

.1 Conduct pressure and leak tests in accordance with section 23 05 01.

3.8 Flushing and Cleaning

.1 After pressure testing, clean piping in accordance with Section 23 25 05.

.2 For piping changes to existing systems, which consist of NPS 2 and smaller branch piping to terminal heating or cooling equipment, the following abbreviated cleaning and flushing procedure may be used:

.1 After cutting of threads and de-burring, and before installation of piping, manually clean the interior of the pipe with wire-brush on an extended rod, while washing the inside of the pipe with a solution of non-foaming, phosphate free detergent, 3% by weight, followed by a hose rinse flushed to drain until water runs clear.

.2 After installation of piping, check strainers are clean, and open isolation valves to use service water for pressure testing and final flush.

.3 After pressure testing, isolate new piping from existing piping, fully open control valves (where installed) and flush service water to drain. Use compressed air at not more than 70 kPa (10 psig) to assist in flushing the water.

.4 Refill system with service water and circulate for two hours. Inspect strainers, and repeat drain, fill and recirculate routine until strainers are free of debris.

3.9 Schedules

.1 The following appended equipment schedules form part of this specification section.

.1 Schedule A1 Pipe Wall Thickness.

Schedule A1 – Pipe Wall Thickness

Pipe Size NPS	Piping Design Temperature	Pipe Joint Method	Pipe Material	Pipe Wall Thickness
≤ 2-1/2	≤ 105°C (220°F)	All	A106, A53	Schedule 40
	>105°C (220°F)	Threaded or cut grooved	A106	Schedule 80
		Welded, flanged, roll grooved	A106, A53	Schedule 40

3 to 10	≤ 121°C	All	A106, A53	Schedule 40
12 to 18	≤ 121°C	All	A106, A53	Standard – 9.5 mm (0.375 in.)
20 to 36	≤ 121°C	All	A106, A53	Schedule 30

END OF SECTION

HYDRONIC PIPING - COPPER
23 21 13.33

1 GENERAL

1.1 Scope

.1 Provide copper tube and fittings for HVAC liquid piping systems for aboveground and underground installations for the following applications:

.1 (as an alternative to steel piping) final connections not exceeding 1 m (39 in) in length to terminal heating units which have copper tube coils, copper tube heating elements, and copper tube radiant panels,

.2 drain and vent piping for equipment and piping systems (except cooling tower drainage piping).

.3 non-potable make-up water piping for HVAC services, or

.4 where otherwise shown.

.2 This specification applies to liquid piping systems with design pressures not exceeding 2000 kPa (290 psig) at temperatures not exceeding 121°C (250°F, except as otherwise specified. Refer to section 23 05 01 for piping system applicability.

.3 The use of copper tube is limited to nominal tube sizes NPS 3 and under.

1.2 Related Sections

.1 Without limiting the scope of work or applicability of other specification sections, the work under this section directly integrates with or refers to the following specification sections:

.1 20 05 24 Welding and Brazing

.2 23 05 01 Heating and Cooling Piping Systems General Requirements

.3 23 25 05 HVAC Pipe Cleaning

1.3 Applicable codes and standards

.1 Legislation:

.1 Refer to section 23 05 01.

.2 Installation standards and codes:

.1 Refer to section 23 05 01.

.3 Product standards:

.1	ASME B16.15	Cast Bronze Threaded Fittings, Classes 125 and 250
.2	ASME B16.18	Cast Copper Alloy Solder Joint Pressure Fittings
.3	ASME B16.21	Nonmetallic Flat Gaskets for Pipe Flanges
.4	ASME B16.22	Wrought Copper and Copper Alloy Solder Joint Pressure Fittings
.5	ASME B16.24	Cast Copper Alloy Pipe Flanges and Flanged Fittings; Class 150, 300, 400, 600, 900, 1500, & 2500.
.6	ASME B16.50	Wrought Copper and Copper Alloy Braze-Joint Pressure Fittings
.7	ASTM A307	Standard Specification for Carbon Steel Bolts and Studs 60,000PSI Tensile Strength

.8	ASTM A563	Standard Specification for Carbon and Alloy Steel Nuts
.9	ASTM B32	Standard Specification for Solder Metal
.10	ASTM B88	Standard Specification for Seamless Copper Water Tube
.11	ASTM B813	Standards Specification for Liquid and Paste Fluxes for Soldering of Copper and Copper Alloy Tube
.12	ASTM B828	Standard Practice for Making Capillary Joints by Soldering of Copper and Copper Alloy Tube and Fittings.
.13	AWS A5.8	Specification for Filler Metals for Brazing and Braze Welding
.14	AWS A5.31	Specification for Fluxes for Brazing and Braze Welding
.15	AWS C3.4	Specification for Torch Brazing
.16	MSS SP-106	Cast Copper Alloy Flanges and Flanged Fittings, Class 125, 150 and 300

2 PRODUCTS

2.1 Tube

.1 Aboveground:

.1 NPS ½ to 2: to ASTM B88, type "L" hard-drawn copper tube.

.2 NPS 2-1/2 to NPS 3: to ASTM B88, type "K" hard-drawn copper tube.

.2 Underground or in-slab:

.1 NPS ½ to NPS 3: to ASTM B88, type “K” hard-drawn or annealed copper tube.

.3 Copper tube to be marked on the exterior surface in accordance with ASTM B88, to indicate the tube type (“K” or “L”) by type designation or by colour strip (green stripe for type “K” and blue stripe for type “L”), along with identification of the manufacturer.

2.2 Tube Joints and Fittings

.1 Fittings:

.1 cast bronze fittings to ASME B16.18,

.2 wrought copper and bronze fittings to ASME B16.22,

.3 brazed joints only: Wrought copper and copper alloy to ASME B16.50,

.4 threaded fittings including unions to ASME B16.15, Class 250.

.2 Flanges:

.1 brass or bronze flanges to ANSI B16.24,

.2 gaskets to ANSI B16.21.

Standard of Acceptance

- Chesterton - fig. 100, 195 and 450
- Beldam

.3 Solder:

.1 95:5 tin/antimony solder to ASTM B32.

.4 Braze filler:

.1 silver brazing alloy: classification BCuP-5 to AWS A5.8.

3 EXECUTION

3.1 Tubing Installation

.1 Refer to section 23 05 01 for piping design criteria and general requirements for piping installation.

.2 Maximum tube size: NPS 3.

.3 Slope main piping horizontal or up in direction of flow nominally at a slope of 1:1000 (c in in 10 ft).

.1 branch piping to have greater slope,

.2 slope piping up in direction of terminal heating and cooling devices.

.3 where supply and return piping are grouped together and flow is in opposite directions, arrange piping horizontal.

.4 Use eccentric reducers at tube size changes arranged flat on bottom to assist venting.

.5 Where tubing is installed to run inside of concrete slabs, support tubing to maintain tube centerline at the center of the floor slab unless otherwise shown. Where tubing is supported by ferrous metals or where it might come into contact with reinforcing steel bar, provide two layers of Denso Tape around the tubing at the point of contact.

.6 Use copper tubing for equipment drains (pressure and non-pressure)

.7 Provide di-electric unions or flanges in accordance with section 23 05 01.

3.2 Tube Joints and Fittings

.1 Prepare and install tube and fittings;

.1 in accordance with ASTM B828 for solder joints,

.2 in accordance with AWS C3.4 and specification section 20 05

.2 Use of direct butt weld style soldered or brazed joints, including pulled-Tee's, are not permitted.

.3 Before assembling solder or brazed joints, remove working parts of valves.

.4 Make tube joint for above-ground piping as follows:

.1 NPS 2 and smaller: soldered or brazed joints with socket type fittings.

.2 NPS 2-1/2 to NPS 3: brazed joints with socket type fittings.

.5 Make tube joints for underground and/or in-slab piping as follows:

.1 all sizes: brazed joints with sweat fittings,

.2 arrange tubing to minimize the number of joints. Use annealed tubing wherever possible, with field-bends made with tube bending dies which provide uniform support of tubing during bending operations.

3.3 Equipment Connections

.1 Equipment connections:

.1 NPS 2 and smaller: unions and threaded fittings,

.2 NPS 2 ½ to NPS 3: flanged connections.

3.4 Pressure and Leak Testing

.1 Conduct pressure and leak tests in accordance with section 20 05 01.

3.5 Flushing and cleaning

.1 After pressure testing, clean piping in accordance with Section 23 25 05.

.2 For piping changes to existing systems, which consist of NPS 2 and smaller branch piping to terminal heating or cooling equipment, the following abbreviated cleaning and flushing procedure may be used:

.1 After cutting of threads and de-burring, and before installation of tubing, manually clean the interior of the tube with wire-brush on an extended rod, while washing the inside of the tube with a solution of non-foaming, phosphate free detergent, 3% by weight, followed by a hose rinse flushed to drain until water runs clear,

.2 After installation of piping, check strainers are clean, and open isolation valves to use service water for pressure testing and final flush.

.3 After pressure testing, isolate new piing form existing piping, fully open control valves (where installed) and flush service water to drain. Use compressed air at not more than 70 kPa (10 psig) to assist in flushing the water.

.4 Refill system with service water and circulate for two hours. Inspect strainers, and repeat drain, fill and recirculate routine until strainers are free of debris.

END OF SECTION

Master revised: 7 March 2023

AIR DISTRIBUTION - GENERAL
23 31 01

1 GENERAL

1.1 Scope

.1 Provide labour, materials and equipment for installation, testing and putting into operation ventilating and air conditioning systems as further specified in other Specification sections of Division 20 to 25.

1.2 Qualified Tradesperson

.1 Work to be performed by qualified, licensed and recognized firm with an established reputation in this field, using tradesperson holding applicable certificates of competency.

2 PRODUCTS

2.1 Not Used

3 EXECUTION

3.1 Ductwork

.1 Ductwork system routing is shown diagrammatically. Drawings are not to be considered as fabrication or installation drawings.

.2 Locate mains, risers and runouts to be concealed behind furrings or above ceilings, except in mechanical equipment rooms and access spaces where ductwork is to be exposed.

.3 Determine areas without ceilings from Architectural drawings and Room Finish Schedules, and in these areas keep ductwork as high as possible.

.4 Anchor, guide and support vertical and horizontal runs of ductwork to resist dead load and external live loads, and to absorb pressure thrust.

3.2 Air Supply Equipment

.1 Install and connect air handling units, air conditioning units, fans and associated equipment, and build casing and plenums.

3.3 Air Exhaust Equipment

.1 Install and connect exhaust fans, roof and wall exhausters and dust and fume collectors.

3.4 Terminals Units

.1 Locate and install terminal units, registers, diffusers, and grilles. Coordinate with Architectural reflected ceiling plans for position of ceiling mounted elements.

3.5 Life Safety

.1 Install fire dampers, smoke dampers, and combination smoke and fire dampers to protect openings in fire separations.

.2 Provide smoke stopping around unprotected ducts passing through smoke separations.

3.6 Air Balancing

.1 Co-operate with air balancing agency; install supplementary dampers, access openings and access doors to facilitate testing and adjustment.

END OF SECTION

Master revised: October 6, 2022

METAL DUCTS
23 31 13.13

1 GENERAL

1.1 Scope

.1 Provide metal HVAC ductwork including casings and plenums as shown.

.2 Refer to other specification sections for specialty duct systems.

1.2 Related Sections

.1 Without limiting the scope of work or applicability of other specification sections, the work under this section directly integrates with or refers to the following specification sections:

.1 20 05 01 Basic Materials and Methods

.2 23 31 13.36 Fire Protected Metal Ductwork

.3 23 33 05 Duct Accessories.

1.3 Definitions and Abbreviations

.1 The following definitions apply to this section and as applicable to related sections.

.1 ***Casing(s)*** – a fabricated metal construct of some combination of walls, roofs, and/or floors for the conveyance of air at relatively low air velocities (typically below 5 m/s (1000 fpm) and which encloses equipment such, as but not limited to, fans, coils, and filters.

.2 ***Ductwork*** – a network of metallic or flexible material distributed through a building or space for the conveyance of air: (a) from an HVAC unit to one or more spaces, or (b) exhausted from those spaces.

.3 ***Plenums*** – a form of ductwork for the conveyance of air at relatively low velocities (typically below 3.5 m/s (700 fpm)).

.4 ***Type II hoods*** - a commercial-kitchen exhaust hood designed for removal of heat, steam vapour and other non-grease emissions and which they and their associated duct system are exempt from the requirements of NFPA 96.

.2 In SMACNA 006 - *HVAC Duct Construction Standard – Metal and Flexible*, a reference to requirements for construction of “casings” in chapter 9 applies equally to construction of plenums, except/and as specified herein.

1.4 Applicable Codes and Standards

.1 Installation codes and standards:

.1	NFPA 90A	Standard for the Installation of Air-Conditioning and Ventilating Systems.
.2	ASHRAE	Letter and number designations, shown as “CR3-16" etc., are taken from ASHRAE Duct Fitting Data Base.(DFDB)
.3	ANSI/SMACNA 006	HVAC Duct Construction Standards - Metal and Flexible (4th edition)
.4	ANS/SMACNA 002	Rectangular Industrial Duct Construction Standards (2nd edition)
.5	ANSI/SMACNA 016	HVAC Air Duct Leakage Test Manual (2nd edition)

.2 Product standards:

.1	ASTM A36	Standard Specification for Carbon Structural Steel

.2	ASTM A90	Standard Test Method for Weight (Mass) of Coating on Iron and Steel Articles with Zinc or Zinc-Alloy Coatings
.3	ASTM A240	Standard Specification for Chromium and Chromium-Nickel Stainless Steel Plate, Sheet, and Strip for Pressure Vessels and for General Applications
.4	ASTM A283	Standard Specification for Low and Intermediate Tensile Strength Carbon Steel Plates
.5	ASTM A463	Standard Specification for Steel Sheet, Aluminum-Coated, by the Hot-Dip Process
.6	ASTM A480	Specification for General requirements for Flat Rolled Plate, Sheet, and Strip
.7	ASTM A653	Steel Sheet, Zinc-Coated (Galvanized) or Zinc-Iron Alloy-Coated (Galvannealed) by the Hot Dip Process
.8	ASTM A924	Standard Specification for General Requirements for Steel Sheet, Metallic-Coated by the Hot-Dip Process
.9	ASTM A1011	Standard Specification for Steel, Sheet and Strip, Hot-Rolled, Carbon, Structural, High-Strength Low-Alloy, High-Strength Low-Alloy with Improved Formability, and Ultra-High Strength
.10	ASTM B209	Standard Specification for Aluminum and Aluminum-Alloy Sheet and Plate
.11	ANSI/MSS SP-58	Pipe Hangers and Supports

1.5 Qualified Tradesperson

.1 Work to be performed by qualified, licensed and recognized firm with an established reputation in this field, using tradesperson holding applicable certificates of competency.

1.6 Design Criteria

.1 Outdoor ductwork, rooftop duct support frames, and weather shields are to be designed to meet the local wind loading in accordance with the building code requirements at the location of the Work.

1.7 Submittals

.1 Submit manufacturer's catalogue literature for:

.1 proprietary joints.

.2 Submit fabrication shop drawings for the following ductwork elements:

.1 integral drain pans and external drain pans including drain pipe connection,

.2 water-resistant ductwork,

.3 casings and plenums.

1.8 As-Built Drawings

.1 As work progresses, mark-up field drawings as to actual location of ductwork, balancing dampers and other duct accessories and submit as part of record of “As-Built” conditions.

2 PRODUCTS

2.1 Common Material

.1 Galvanized steel:

.1 Ducts and connectors: lock forming quality to ASTM A653 or ASTM A924, type Z180 (G60) or Z275(G90) as specified in Part 3 – EXECUTION.

.2 Miscellaneous pipe, angles, strips and threaded rod in contact with ductwork: galvanized with a minimum thickness equal to ASTM A653 - Z180 (G60).

.2 Stainless steel:

.1 to ASTM A480/ASTM A240, Type 304L and 316L.

.2 finish: 2B mill, except where otherwise shown.

.3 Aluminum:

.1 To ASTM B209;

(a) alloy 3003-H14 or 5052-H32 for sheet material.

(b) alloy 6061-T6 for plate material

(c) alloy 6061-T4 or T6 for shapes material.

.4 Plain mild carbon steel:

.1 To ASTM A1011, A283, A572 and A36 as applicable.

2.2 Joints

.1 Fabricated joints: to ANSI/SMACNA 006 as applicable to duct pressure class, duct size, duct-wall thickness, and reinforcing requirements.

.2 Bolted companion flange – rectangular ductwork:

.1 formed flanges, corner pieces, integral edge seals, gaskets and cleats.

.2 material to match that of ductwork being joined,

.3 Neoprene gaskets.

Standard of Acceptance

° Ductmate – fig. System 25/35/45
° Hardcase (Carlisle) – fig. Nexus

.3 Barrel-rim clamped companion flange – round ductwork:

.1 roll-formed companion flanges, field installed, mechanically fastened and sealed to ends of duct,

.2 barrel ring clamp with bolted or no-tool cam locking clamp,

.3 Neoprene gaskets.

Standard of Acceptance

° Ductmate - fig. Spiralmate
° Nordfab - fig. Quick-Fit Ducting

2.3 Sealant and Tape

.1 To Specification section 23 33 05.

2.4 Hangers and Supports

.1 Upper hanger attachments;

.1 in new concrete: manufactured concrete inserts.

Standard of Acceptance

- Myatt Fig. 485

.2 for steel joist: galvanized joist clamps or steel plate washer.

Standard of Acceptance

- Anvil Fig. 61 or 86
- Anvil Fig. 60 for plate washer

.3 for steel beams: galvanized beam clamps.

Standard of Acceptance

- Anvil Fig. 60

.2 Hanger straps:

.1 Galvanized steel strap hangers for indoor use only.

.3 Hanger rod:

.1 Continuous threaded rod:

(a) carbon steel, USS national course thread,

(b) tension load ratings to MSS SP-58,

Standard of Acceptance

- Anvil - fig. 146
- Taylor – fig. 54

.2 Welded eye rod:

(a) carbon steel, USS national course thread,

(b) tension load ratings to MSS SP-58,

(c) tension load rating to be the same as continuous welded rod.

Standard of Acceptance

- Anvil - fig. 278
- Taylor

.4 Seismic supports and restraints to Specification section 20 05 49.

2.5 Rooftop Duct Support System

.1 Prefabricated rooftop duct, HVAC equipment, and conduit supports, supported without penetrations of the roof membrane or flashings:

.1 to ANSI/MSS SP-58, Type 62, 63 and 64,

.2 high density polypropylene roof bases, with UV protection,

.3 roof pads suitable for roof type,

.4 minimum 2.5 mm (12 ga.) thick formed channel structure

.5 minimum 1.9 mm (14 ga.) thick supplementary support

.6 galvanized steel duct support mounting channels,

.7 modular mounting channels and clips for conduit,

.8 designed to withstand local wind loading and seismic movement,

.9 for ductwork 300 x 300 mm (12 in x 12 in) and larger,

.10 for conduit Ø12 mm to Ø100 mm.

Standard of Acceptance

- Portable Pipe Hangers
- Miro (Unistrut)]
- Taylor Pipe Supports

2.6 Duct Access Doors

.1 To Specification section 23 33 05.

3 EXECUTION

3.1 General Fabrication and Installation Requirements

.1 Construction details, sheet gauges, reinforcing, and bracing for ductwork, casings, and plenums to be in accordance with SMACNA 006, except/and as otherwise shown.

.2 Material selection: refer to Schedule A at the end of this section where otherwise shown.

.3 Rectangular ductwork seams and joints:

.1 longitudinal seams: Pittsburgh Lock, with specified sealant applied prior to hammering of joint,

.2 transverse joints: to SMACNA HVAC standards based on pressure class and reinforcement used, and for sealing requirements.

.4 Round ductwork seams and joints, for pressure class 500 Pa (2 in wg) and higher:

.1 spiral flat type longitudinal seam, button punched.

3.2 Sheet-Metal Casings

.1 Provide sheet-metal casings to enclose equipment as shown.

.2 Construct casings in accordance with SMACNA 006 except/and as follows.

.3 Design pressures:

.1 suction side of fan: 500 Pa (2 in.w.c.)

.2 discharge side of fan: in accordance with the supply duct system pressure class.

.3 where suction pressure is 750 Pa (3 in.w.c.) or greater, casings may be constructed in accordance with SMACNA 002.

.4 design and construct casings:

(a) to withstand 133% of the design pressure without structural failure,

(b) so that walls and roof do not exceed a deflection of more than 1.0 mm/m (1/8 in./ft.) of width at design pressures.

.4 Construct casing as:

.1 double-wall construction where enclosed equipment includes cooling coils, or as otherwise shown,

.2 single-wall construction for all other enclosed equipment.

.5 For single wall construction, fabricate panels with reinforcement on the outside of the casing (not within the airstream).

.6 Construct double-wall casings as follows:

.1 minimum 50 mm (2 in.) thick wall-cavity construction,

.2 outer skin: galvanized steel of required wall thickness for general casing construction.

.3 inner skin (liner):

(a) 0.76 mm (22 GA.) type Z275 (G90) galvanized steel;

(b) solid liners in wet-areas including cooling coils dehumidification equipment, and humidifiers, or where shown to be suitable for wash-down.

(c) 40% perforated liners in all other areas

.4 insulation:

(a) same nominal thickness as the wall cavity,

(b) rigid-board glass-fibre insulation, 48 kg/m^3 (3.0 lb/ft^3) density, 0.35 W/m°C at 38°C (0.24 BTU·in/hr·ft2·°F at 100°F) mean temperature,

(c) foil backed with vapour barrier positioned on inner wall side.

.5 casing flanges turned inwards to occupy the insulation cavity;

(a) where the required casing flange dimension exceeds the minimum specified wall-cavity thickness, increase the wall-cavity thickness to suit

.6 thermal break:

(a) construct casing flanges and internal channels to create a thermal break between inside and outer casing skins (no continuous metal contact between inner and outer skins), for walls and roof panels,

(b) provide continuous 3 mm (1/8 in.) neoprene gasket between casing panels and attachment to building structure.

.7 spot weld panels to bracing and reinforcement flanges, and provide inside corner and outside corner trim angles to close-off joints,

.8 provide internal and external cover plates to cover panel joints, imbedded in sealant and mechanically fastened to panel channels.

.7 Drains:

.1 where casings have an integral metal floor (bottom surface), construct the casing floor as an integral drain pan as specified herein.

.2 drain pan material: same as casing material

.8 Access doors:

.1 provide access doors at locations as shown.

.2 door size: 500 W x 1375 H mm (20 W x 54 H in) unless otherwise shown,

.3 arrange doors to open against the differential pressure,

.4 door frames:

(a) fully-welded angle or C-channel frame, minimum 1.6 mm (16 GA) thick, with mitered corners that are welded and ground flush, and mechanically fastened to adjacent casing panels,

(b) adjacent casing panels provided with additional reinforcing to stiffen the casing wall opening,

(c) continuous sealant between door frame and adjacent casing.

.5 door construction:

(a) door panel thickness:

i) outer panel: 0.85 mm (22 GA.)

ii) inner panel (for double-wall construction): 0.70 mm (24 GA).

(b) door edge reinforcement: either rolled door edges or welded angles,

(c) where casing is required to be double wall construct, provide doors with 25 mm (1 in.) thick insulation covered with inner panel,

(d) hinges:

i) design pressure not exceeding 500 Pa (2 in.w.c.): three (3) mechanically fastened 75 mm (3 in.) wide butt hinges per door, or continuous piano hinge,

ii) design pressures greater than 500 Pa (2 in.w.c.): three (3) 75 mm (3 in.) wide butt hinges, welded to door panel.

(e) two (2) latch handles per door,

(f) continuous neoprene automotive gaskets at contact areas between door and door frame.

.9 Casing penetrations:

.1 for penetrations of pipe or conduit through casing walls,

.2 fabricated single-piece circular or square escutcheon plate, with opening closely sized to suit OD of pipe or conduit,

.3 6 mm (1/2 in.) thick neoprene gasket with opening for conduit and pipe opening sized as an interference fit,

.4 escutcheon plate mechanically fastened to casing wall with bolts, nuts and washers at not less than four (4) locations per plate.

3.3 Sheet-Metal Plenums

.1 Provide sheet metal plenums with dimensions as shown. Construct plenums as follows:

.1 single wall construction,

.2 constructed of the same material as adjacent duct except as otherwise shown,

.3 50 mm (2 in.) flanges or as required to suit ductwork or damper connections.

.2 Design loading:

.1 where a horizontal plenum has an internal vertical dimension greater than 1000 mm (39 in.) and with a concurrent width greater than 600 mm (24 in.) and has access doors to allows entry of an adult person into the plenum, design the plenum and support system to support a live point load of 1.3 kN (300 lbf) over a contact area of 300 x 300 mm^2 (12 x 12 in^2).

.3 Additional requirements for outdoor intake air plenums and exhaust air plenums:

.1 construct the bottom of the plenum as an integral drain pan as specified herein.

.2 drain pan material: same as plenum material.

3.4 Integral Drain Pans

.1 Where shown or specified, construct the bottom portion of a duct, casing or plenum as a watertight drain pan.

.2 Materials: same material as the associated duct, casing or plenum unless otherwise shown.

.3 Break the bottom panel in two-directions to allow water to drain to a low-point drain outlet,

.4 Provide continuous welded joints along bottom of plenum, and extend welds up vertical joints at least 50 mm (2 in.).

.1 For galvanized steel materials, touch-up ductwork where galvanization is damaged during welding with zinc-rich paint.

.2 For stainless steel materials, mechanically grind or chemical pickle to remove the welding tint in the heat affected zone (HAZ).

.5 Provide a NPS 3/4 x 75 mm (3 in.) long stainless steel drain tube connected to the duct drain pan at the low-point drain outlet.

3.5 External Drain Pans

.1 Provide external drain pans where shown.

.2 Materials: T304 stainless steel.

.3 Fabricate drain pan with 50 mm (2 in.) high side walls.

.4 Break the bottom panel in two-directions to allow water to drain to a low-point drain outlet,

.5 Provide welded-on hanger attachments to allow support by hanger rod or support the underside of the drain pan.

.6 Provide continuous welded joints along bottom of plenum, and extend welds up vertical joints. Mechanically grind or chemical pickle both the interior and exterior surfaces at the welds to remove the welding tint in the heat affected zone (HAZ).

.7 Provide a NPS 3/4 x 75 mm (3 in.) long stainless steel drain tube connected to the duct drain pan at the low-point drain outlet.

3.6 Balancing Dampers

.1 Provide splitter dampers where branch connections are taken from supply mains.

.2 Provide single blade dampers on each branch of supply air systems downstream of terminal boxes.

.3 Provide Opposed Blade Dampers (OBD) at branch and main connection on exhaust and return air systems.

3.7 Finishing, Fastening and Supports

.1 Hammer edges and slips to leave smooth finished surface inside duct.

.2 Support vertical ducts with steel angles riveted to duct and bearing on building structure;

.1 design and fabricate duct riser supports using supplementary structural steel supports in accordance with SMACNA 006 and Specification section 20 05 01.

.2 use plain carbon steel for duct riser supports located indoors,

.3 use galvanized carbon steel for duct riser supports located outdoors.

.3 Duct hangers;

.1 for ducts with both dimensions not exceeding 500 mm (20 in):

(a) supported with strap hangers of same material as duct but one sheet metal thickness heavier, or on steel angles as specified below.

(b) extend strap hangers down duct side and turn under 50 mm (2 in) fastening securely to side and underside of duct.

.2 for ducts with any dimension greater than 500 mm (20 in):

(a) supported with trapeze hangers constructed from galvanized steel angle with steel rods in accordance with table 1;

Table 1 : Duct Hangers		
Duct size mm (in)	Angle size mm (in)	Rod size mm (in)
up to 750 (up to 30)	25x25x3 (1x1x⅛)	6 (¼)
750 to 1050 (30 to 40)	40x40x3 (1½x1½x⅛)	6 (¼)
1050 to 1500 (40 to 60)	40x40x3 (1½x1½x⅛)	10 (⅜)
1500 to 2400 (60 to 90)	50x50x3 (2x2x⅛)	10 (⅜)
2400 and over (90 and over)	50x50x6 (2x2x¼)	10 (⅜)

.3 maximum hanger spacing: 2.4 m (8 ft) on centre.

3.8 Outdoor Ductwork Installation

.1 Construct outdoor ductwork in accordance with the requirements for indoor ductwork, and/except as follows.

.2 Construct galvanized steel duct using Z275 (G90) sheet metal.

.3 Support ductwork on a manufactured rooftop duct support framing system, specifically designed and fabricated to suit each outdoor duct.

.4 Where seismic restraint is required;

.1 provide both a bottom support beam and top support brace.

.2 provide restraint at both sides at the top of the duct, at the specified restraint spans, with minimum Ø12 mm stainless steel bolt, nuts and washers, fastened to the duct support system post and to a duct mounting bracket. Fasten the mounting brackets to the stop corners of the duct with 2@ #10 sheet-metal screws.

.5 For uninsulated ductwork;

.1 support ducts on a steel angle fastened to the underside of the duct, and bolt the steel angle to the duct support frame bottom crossbar,

.2 where fastened to the bottom crossbar, provide slotted bolt holes and oversize washer plates to allow 6 mm (1/4 in) duct axial movement for thermal expansion, and to resist wind and seismic movement.

.6 For insulated ductwork;

.1 support ducts on a steel angle fastened to the underside of the duct, which extend not more than 50 mm (2 in) past each side of the duct. Do not penetrate the duct insulation with the steel angles.

.2 support the duct on threaded rods from the support frame bottom crossbar, to provide sufficient space between the underside of the duct and the crossbar to accommodate the required insulation thickness and protective finish cover, plus an additional 25 mm (1 in),

.3 insert a section of 25 mm (1 in) thick high-density polystyrene insulation equal to Owners Corning Celfort 300, between the duct insulation and top of the support crossbar,

.4 snug down the mounting bolts to provide adequate compression onto the polystyrene insert.

3.9 Pressure Classification and Seal Class

.1 Low pressure ductwork construction classification in accordance with Table 2.

Table 2: Duct Pressure Classification			
Pressure class Pa (in wg)	Operating pressure Pa (in wg)	Velocity m/s (fpm)	Leakage Test Pressure Pa (in wg)
125 (½)	up to 125 (½)	10.0 (2000)	125 (½)
250 (1)	125 to 250 (½ to 1)	12.5 (2500)	250 (1)
500 (2)	250 to 500 (1 to 2)	12.5 (2500)	500 (2)
750 (3)	500 to 750 (2 to 3)	15.0 (3000)	750 (3)
Greater than 750 (3)	High Pressure Ductwork		Not less than 1000 (4)

.2 Assemble ductwork seams and joints with joint sealant as shown in table 3.

.3 Sealant application:

.1 store duct sealant at room temperature for 24 hours before use,

.2 apply sealant on seams as noted in table 1, and brush or extrude sealant to cover fasteners,

.3 on bell and spigot style joints apply sealant on male section with caulking gun and spread sealant evenly on mating surface with brush,

(a) insert fitting and secure with sheet metal screws

(b) brush sealant onto outside of assembled joint in 50 mm (2 in) wide band covering fastener heads,

.4 allow 40 hours curing time before pressure testing.

Table 3: Duct System Pressure and Seal Class				
No.	Ductwork System	Static pressure construction class Pa (in.wg.)	Seal class	Sealing requirements Notes (1)(2)(3)(4)
1	Induction unit systems: supply air duct from fan discharge to induction unit plenum box inlet.	+1000 (4) and higher	A	Transverse joints, longitudinal seams, ductwall penetrations, and other connections
2	Supply air duct risers in vertical service space (duct shafts) which are more than three storeys in building height.	+1000 (4)	A	
3	Return/exhaust air ductwork between a Heat Recovery Wheel and suction side of fan.	-1000 (4)	A	
4	Supply, return and exhaust air ductwork located outdoors.	All classes as otherwise specified herein	A	
5	Supply air duct from fan to vertical service space.	500 (2)	B	

Table 3: Duct System Pressure and Seal Class				
No.	Ductwork System	Static pressure construction class Pa (in.wg.)	Seal class	Sealing requirements Notes (1)(2)(3)(4)
6	Supply air duct risers in vertical service space (duct shafts) which are more three storeys in building height or less.	500 (2)	B	Transverse joints, longitudinal seams, and other connections
7	Supply air duct between vertical riser and inlet to terminal units or reheat coils.	500 (2)	C	Transverse joints and other connections
8	Supply air duct for rooftop packaged air handling units, serving three floor or less.	500 (2)	C	
9	Return air and general exhaust air duct risers in mechanical rooms and in vertical service spaces (duct shafts).	-500 (2)	C	
10	Supply air duct downstream of terminal units or reheat coil	+250 (1)	C	Transverse joints and other connections
11	Supply air ducts for rooftop packaged air handling units, serving a single zone or floor.	+250 (1)	C	
12	Return air and general exhaust air ducts on suction side of fans other than in mechanical rooms and vertical service spaces.	-250 (1)	C	
13	Relief air ducts on discharge side of return fan	+250 (1)	C	
14	Fan coil units, suction and discharge ducts	+250 (1)	C	
15	Washroom and general exhaust air branch ducts to individual rooms	125 (1/2)	---	None

Notes for table 3:

(1) Transverse joints are connections of two duct or fitting elements oriented perpendicular to flow,
(2) Longitudinal seams are joints oriented in direction of flow,
(3) Duct wall penetrations are openings made by screws, non-self-sealing fasteners, pipe, tubing, rod and wire,
(4) Other connections such as spin-ins taps and other branch fittings inserted into cut openings in duct, access door frames, insertion type control elements and duct joints at equipment are to be treated as *transverse joints.*

3.10 Fittings - Rectangular Ductwork

.1 Refer to Schedule B at the end of this section for illustrations of referenced fitting types.

.2 Elbows:

.1 Elbows are to be installed as shown, or if not shown, in descending order as listed in table 4.

(a) for clarity, elbows types are to be selected based on the highest order number (where 1 is the highest) which will fit the available space.

Table 4: Rectangular Duct, Elbows						
Order No.	ASHRAE Fitting No.	Description	Throat Radius Ratio R/W	Duct Width Limit mm (in)	Minimum Throat Radius mm (in)	Remarks
1	CR3-1	Smooth radius Un-vaned elbow	1.5	≤ 300 (12)	---	Default
			1.0	> 300 (12)	---	
2	CR3-3	Smooth radius Vaned elbow	0.75	≤ 900 (36)	150 (6)	One full radius single thickness splitter vane
	CR3-4	Smooth radius Vaned elbow	0.75	> 900 (36) ≤ 1500 (60)	150 (6)	Two full radius single thickness splitter vane
	CR3-5	Smooth radius Vaned elbow	0.75	> 1500 (60)	150 (6)	Three full radius single thickness splitter vane
3	CR3-15	Square Mitred Vaned elbow	Square throat; Square heel.	--	---	Double thickness turning vanes; 50 (2) heel radius vane; 54 mm (2.125 in) vane spacing.

.2 First elbow on discharge side of fan:

(a) fitting CR3-1, un-vaned elbow with throat radius 1.0 times duct width, with the required upstream effective length L_e of straight length of duct in accordance with fitting type SR7-5 or SR7-9 as applicable.

.3 Wye and tee branch fittings - Supply air systems:

.1 Wye and tee branch fittings are to be installed as shown, or if not shown, as selected from table 5.

Table 5 : Rectangular Duct, Wye and Tee Branch Fittings - Supply Air Systems			
Ref. No.	Supply Ductwork System	Fitting Type	ASHRAE Fitting No
1	For 750 Pa (3 in.wg) pressure class and above: branch take-off from ducts in shafts, and ducts upstream of terminal boxes, filters and reheat coils	Smooth radius wye; diverging	SR5-1
		Dovetail wye	SR5-14
		Divided flow fittings	(SMACNA) 4A or 4B
		45° entry branch diverging	SR5-13
2	Supply ducts downstream of terminal boxes, fan coil units, reheat coils or heat pumps	Tee, rectangular main to round conical tap	SR5-12
		Tee, 45° entry branch diverging	SR5-13

Table 5 : Rectangular Duct, Wye and Tee Branch Fittings - Supply Air Systems			
Ref. No.	Supply Ductwork System	Fitting Type	ASHRAE Fitting No
		Smooth radius wye; diverging	SR5-1

.4 Wye and tee branches - Return/Exhaust air systems:

.1 Wye and tee branch fittings are to be installed as shown, or if not shown, as selected from table 6.

Table 5 : Rectangular Duct, Wye and Tee Branch Fittings - Return/Exhaust Air Systems			
Ref. No.	Return/Exhaust Ductwork System	Fitting Type	ASHRAE Fitting No
1	All pressure classes including branch connections at duct shafts	Smooth radius wye; converging	ER5-1
		Dovetail wye	ER5-4
		Divided flow fittings	(SMACNA) 4A or 4B
		45° entry branch diverging, where shown on drawings	ER5-3

.5 Transitions (Rectangular and Round):

.1 converging: maximum 20° angle between duct side and direction of flow,

.2 diverging: maximum 15° angle between duct side and direction of flow.

.6 Fabricate duct offsets using elbows selected in accordance with table 2 and as follows:

.1 single offset in single plane, less than duct height: made up with two 45° elbows,

.2 single offset, of greater displacement, made up with 90° elbows,

.3 double offset in single plane, less than duct height, made up with four 45° elbows,

.4 double offset in single plane, of greater displacement than duct height, made up with 90° elbows.

.7 Obstructions passing through duct:

.1 covered by round nosed streamline enclosure where free area of duct is reduced by less than 15%,

.2 fitted in round nosed streamline enclosure with duct width increase, SMACNA HVAC FIG 2-10, Detail E , with converging and diverging transition angle requirements as specified above.

3.11 Fittings - Round Ductwork

.1 Refer to Annex A at the end of this Section for illustrations of referenced fitting types.

.2 Elbows:

.1 Elbows are to be installed as shown, or if not shown, in order of available space as listed in table 6.

Table 6 : Round Duct, Elbows					
Ref. No.	Description	ASHRAE Fitting No.	Throat Radius Ratio R/W	Duct Width Limit mm (in)	Remarks
1	30° elbow	CD3-3*	1.5	≤ 300 (12)	Die stamped
		CD3-14*	1.5	> 300 (12)	2-Gore
2	45° elbow	CD3-3	1.5	≤ 300 (12)	Die stamped
		CD3-14	1.5	> 300 (12)	3-Gore
3	60° elbow	CD3-3*	1.5	≤ 300 (12)	Die stamped
		CD3-14*	1.5	> 300 (12)	4-Gore
4	90° elbow	CD3-1	1.5	≤ 200 (8)	Die stamped
		CD3-9	1.5	>200 (8) and ≤ 350 (14)	5-Gore
		CD3-10	1.5	>350 (14) and ≤ 900 (36)	7-Gore
			2.5	> 900 (36)	7-Gore

.3 Wye branches:

.1 Wye and tee branch fittings are to be installed as shown, or if not shown, as selected from table 7.

Table 7 : Round Duct, Wye and Tee Branch Fittings			
Ref. No.	Supply Ductwork System	Fitting Type	ASHRAE Fitting No
1	Downstream of supply fan.	Wye branch plus 45° elbow	SD5-2
		Tee, tapering	SD5-12
2	Downstream of terminal boxes.	Wye branch plus 45° elbow	SD5-1
		Tee, tapering	SD5-10
3	Return or exhaust duct branches.	Wye branch plus 45° elbow	ED5-2
4	Return or exhaust duct branches; equal main and branch duct size.	Tee, tapering, with 45° elbow	SD5-2
5	Return or exhaust duct branches; smaller branch size.	Tee, tapering, with 45° elbow	SD5-12

3.12 Temporary Protection of Duct Openings

.1 Cap off ends of unfinished ducts while plastering, drywall and other finishing operations are in progress,

.2 Cover open ends or registers of active exhaust/return ducts with 25 mm (1 in) thick filter media secured with tape. Maintain media until dust producing finishing operations are completed.

3.13 Duct Access Doors

.1 Provide for inspection and servicing of duct mounted components and cleaning of duct system;

.1 located such that any section of duct is not more than 15 m (50 ft) from point of access,

.2 at not more than 6 m (20 ft) intervals on supply air ductwork installed after HEPA filter,

.3 at base of each accessible duct riser,

.4 in front of and behind duct mounted coils,

.5 at activation side of fire, smoke, and combination fire/smoke dampers,

.6 and motorized dampers where damper actuator is located inside of duct or plenum.

.2 Door size:

.1 Select access door sizes based on smallest duct dimension in accordance with table 8.

Table 8 : Access Door Sizes

Smallest Duct Dimension mm (in)	Bottom of duct height above floor m (ft)	Location	Door Size mm (in)
≤ 350 (14)	Any	Side or bottom	300 x 150 (12x6)
>350 and ≤500 (>14 and ≤20)	Any	Side or bottom	450 x 250 (18x10)
>500 (>20)	≤3.6 (12)	Side or bottom	530x350 (21x14)
	>3.6 (12)	Bottom	635x430 (25x17)

3.14 Duct Pressure Testing

.1 Duct pressure testing must be completed to the satisfaction of Consultant before ductwork is insulated or concealed.

.2 Pressure test air duct systems for leaks at 1.0 times the system, or portion of the system, pressure class specified and as follows;

.1 between supply air handling units and terminal units,

.2 between supply air handling units and final connection to supply outlets on supply systems without terminal units (excluding flexible ductwork)

.3 between inlet grilles and the exhaust/return fan inlet,

.4 between the return fan discharge outlet and the mixing plenum on recirculating return systems,

.5 between the exhaust fan discharge outlet and the point of discharge before leaving the building, but only for process exhaust systems conveying any materials other than general building exhaust air,

.3 The following parts of system are exempt from pressure testing;

.1 short duct runs of 15 metres (45 feet) or less, operating at 37 Pa (1/8 in) SP or less.

.2 ductwork installed downstream of terminal boxes and fan coil units.

.4 Conduct test in accordance with Associated Air Balance Council (AABC) recommended procedures.

.5 Where audible air noise is detected during test, remove test, pressure apply sealant to leaking joints and seams, and retest after 48 hours. Continue testing and sealing until leaks are inaudible.

3.15 Duct Leakage Testing

.1 Duct leakage testing must be completed to the satisfaction of Consultant before ductwork is insulated or concealed.

.2 Conduct duct leakage tests in accordance with SMACNA *HVAC and Duct Leakage Test Manual* and as specified herein.

.3 For each duct systems, calculate the maximum allowable ductwork airflow leakage rate based on duct surface area, pressure class and duct seal class in accordance with the following:

$$L = F \times D_{SA}$$

and $$F = K \times C_L \times P^{0.65}$$

where these parameters are unique to each section of duct:

L is the maximum allowable leakage airflow rate,
D_{SA} is the duct surface area,
F is the leakage rate coefficient,
C_L is the duct leakage class, and is listed in Table 10,
P is the duct design pressure,
K is a conversion factor depending on the units of measure and is listed in Table 9.

Table 9: Duct Leakage Measurement Units

	Parameter	Flow Measurement Units	
		L/s	CFM
L	Allowable leakage units	L/s	CFM
D_{SA}	Duct surface area units	m^2	ft^2
F	leakage rate coefficient	L/s per m^2	CFM per 100 ft^2
C_L	Leakage Class Coefficient	Refer to table 10 below	Refer to table 10 below
P	Duct Class pressure units	Pa	in.w.c.
K	unit conversion (multiplier)	1.4×10^{-3}	1

Table 10: Leakage Coefficient, C_L

Duct Type	Pressure Class		
	500 (2)	750 (3)	≥1000 (4)
Rectangular metal	16	8	4
Round Metal	8	4	2

Table 10: Leakage Coefficient, C_L			
Duct Type	Pressure Class		
	500 (2)	750 (3)	≥1000 (4)
Unsealed rectangular metal duct	48	48	48
Unsealed round or oval metal duct	30	30	30

.4 Conduct duct leakage tests for each duct system at an air pressure equal to the duct system pressure class. Where a duct system has multiple pressure classes for different sections, test each section of the system independently.

.5 If leakage rate exceeds the calculated maximum allowable value, examine ductwork for excessive leakage, re-seal and then repeat the leak test until the measured leakage rate is less than the calculated maximum allowable value for the section of the system under test.

.1 for clarity, where a duct system consists of multiple sections of different pressure classes, the acceptance criteria is based on not exceeding the aggregate of the calculated maximum allowable leakage of all sections in the same duct system.

.6 Maintain a set of drawings on site, coloured each day during testing to indicate extent of duct satisfying leakage criteria under test.

.7 Submit a written report, verified by the TAB Agent, identifying each segment of duct system tested, showing calculation of maximum allowable leakage (duct surface area, pressure class, seal class, leakage class "C_L" and calculated leakage air flow rate for the section), along with the test pressure and measured leakage airflow rate, and certifying that leakage testing has been satisfactorily completed.

.8 Submit the report for review by Consultant before duct insulation is installed and branch take-offs are made for terminal units.

3.16 Duct Cleaning

.1 Cleaning to be performed by agent specializing in this field of work, be a member in good standing with National Air Duct Cleaners Association (NADCA), and to comply with NADCA standards.

.2 Clean new horizontal and vertical ducts (supply, return, exhaust, transfer), as well as existing supply and return ductwork connected to new fan systems.

.3 Clean ductwork using high powered vacuum system, hand tools and mechanical brushing systems such that metal surfaces are visibly clean.

.4 Reset balancing dampers to original settings if moved during work. Have TAB Agent confirm damper settings.

.5 Maintain set of drawings on site, coloured each day during cleaning to indicate extent of duct cleaning completed.

.6 Submit a written report, verified by TAB Agent, identifying extent of duct system cleaning and certifying that NADCA standards have been met.

3.17 Schedules

.1 The following schedules form part of this specification section.

.1 Schedule A – Ductwork, Casings and Plenum Materials

.2 Schedule B – Illustrations of Referenced Fittings.

Schedule A – Materials for Ductwork, Casings and Plenums

Legend
"Yes" means permitted material "---" means not permitted

Where more than one material is indicate as permitted for a particular application or location, than any of those permitted materials may be used subject to qualifying notes.

Application or Location	Galvanized Steel Z180 (G60)	Galvanized Steel Z275 (G90)	Stainless Steel 304L or 316L	Aluminum	Notes
Outdoors	---	Yes	Yes	---	[1]
Intake air plenums	---	Yes	Yes	---	[1]
Exhaust air plenums	---	Yes	Yes	---	[1]
Parking garages	---	Yes	Yes	---	[1]
Indoor swimming pools and spas	---	---	Yes 316L only	Yes [5][6]	[2]
Shower room supply ducts (within room only)	---	---	Yes	Yes	
Shower room exhaust ducts	---	---	Yes	Yes [5][6]	[4]
Indoor painted ductwork	---	Yes	---	---	
Dishwasher exhaust, Tunnel washer exhaust, Cage washer exhaust	---	---	Yes	Yes [5][6]	[2],[4]
Type II commercial kitchen hoods	---	---	Yes	Yes [5][6]	[2],[4]
Sterilizer equipment exhaust	---	---	Yes	---	[4]
Owner Process Equipment exhaust	---	---	Yes	---	[2]
Duct-mounted humidifiers	---	---	Yes	---	[4]
Buried ductwork	---	PVC Coated	Yes	---	
Airborne Isolation Rooms (AIR)	---	---	Yes	---	[3],[4]
All other indoor locations	Yes	Yes	---	---	

Notes:
[1] For both insulated and uninsulated ductwork.
[2] No. 4 brushed finish for exposed ductwork and hoods, No. 2B mill finish for concealed ductwork.
[3] Special-purpose exhaust system.
[4] Welded joints and seams. Flanges, including Vanstone-type flanges, may be used for duct section connections and connections at equipment.
[5] Material not permitted where ductwork passes through fire separations without fire dampers.
[6] Material not permitted where duct is shown to be constructed as a fire-resistant duct.

Schedule B – Illustration of Referenced Fittings

Rectangular Elbows (see Table 4 in Part 3.)

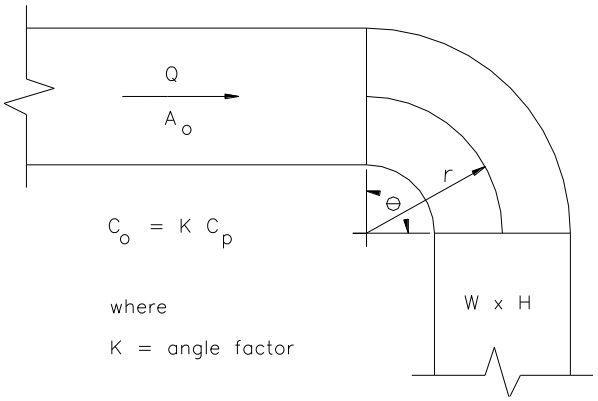

CR3-1

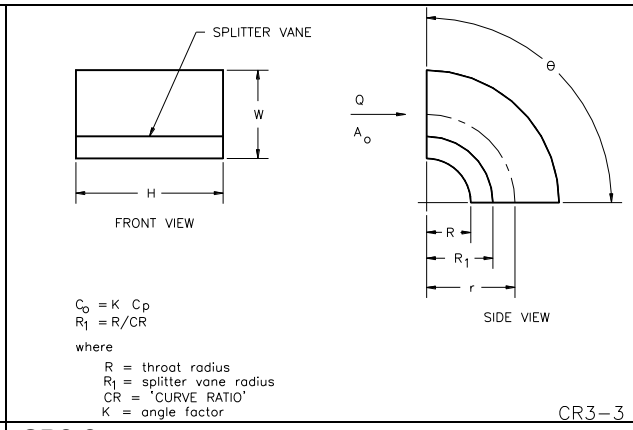

CR3-3

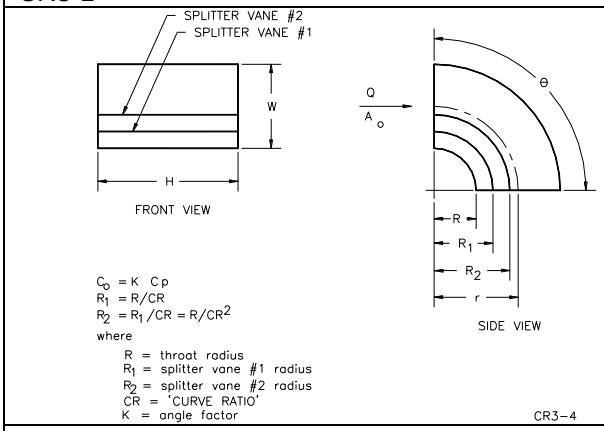

CR3-4

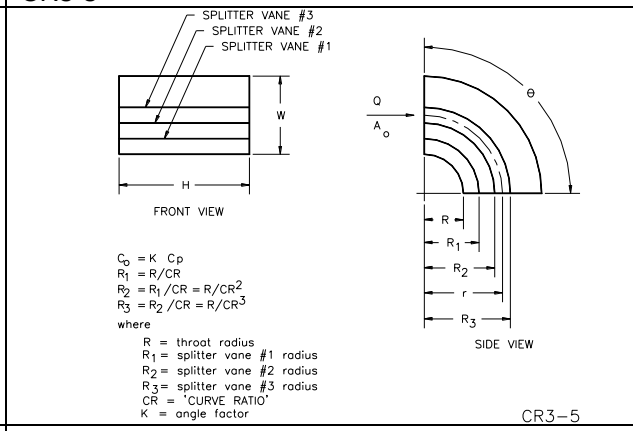

CR3-5

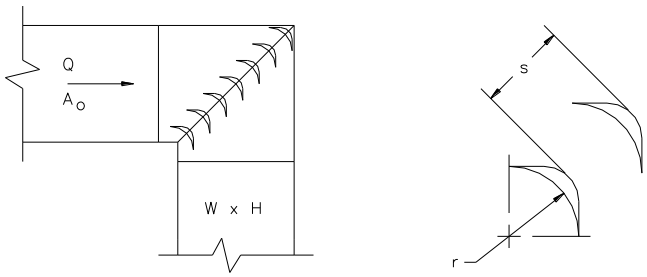

CR3-15

Rectangular Wyes and Tee's – Supply Ductwork (see Table 5 in Part 3)

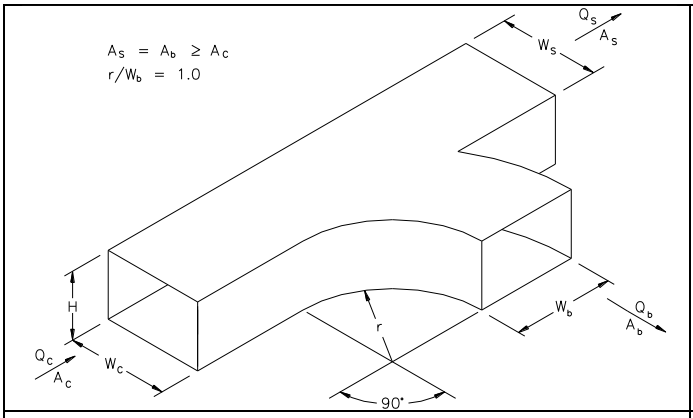

SR5-1

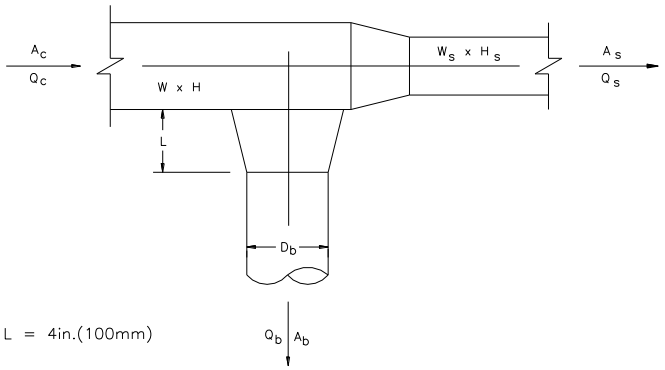

SR5-12

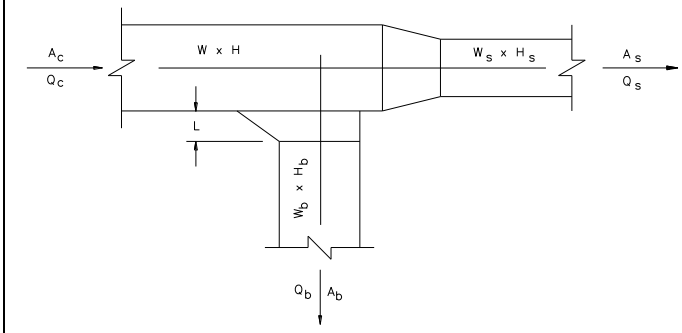

SR5-13

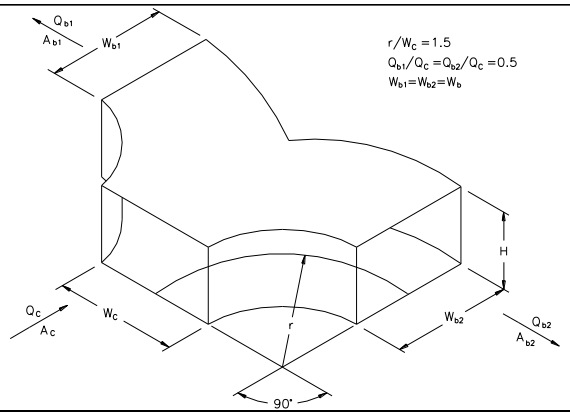

SR5-14

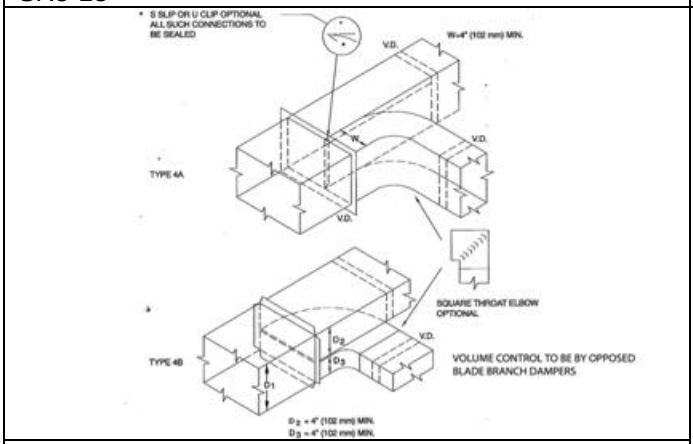

SMACNA Fig. 4A/4B

Rectangular Wyes and Tee's – Return/Exhaust Ductwork (see Table 5 in Part 3)

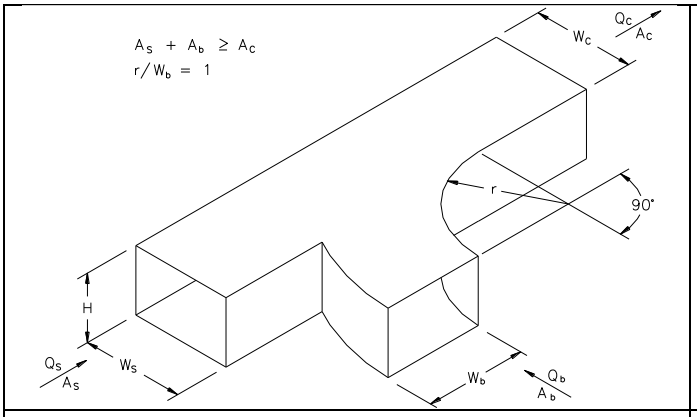

ER5-1

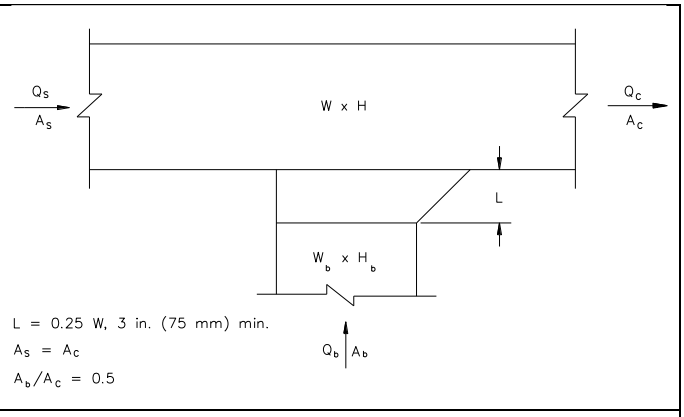

ER5-3

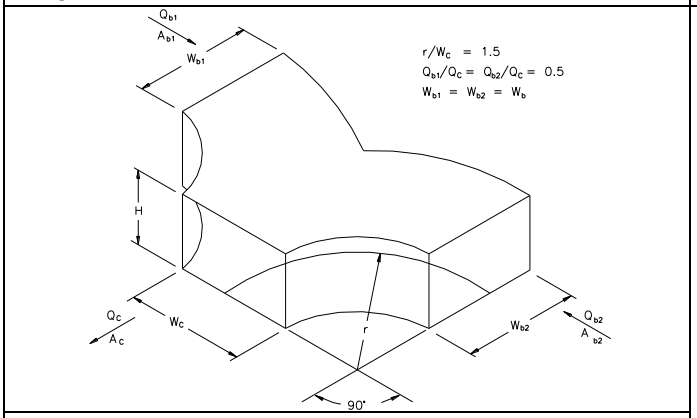

ER5-4

Round Elbows (see Table 6 in Part 3)

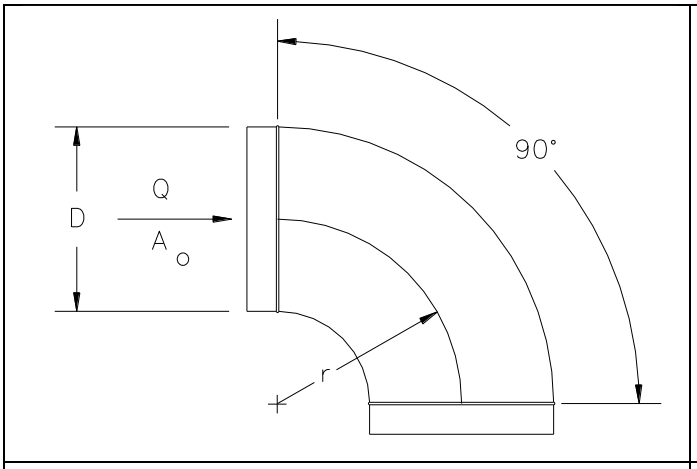

CD3-1

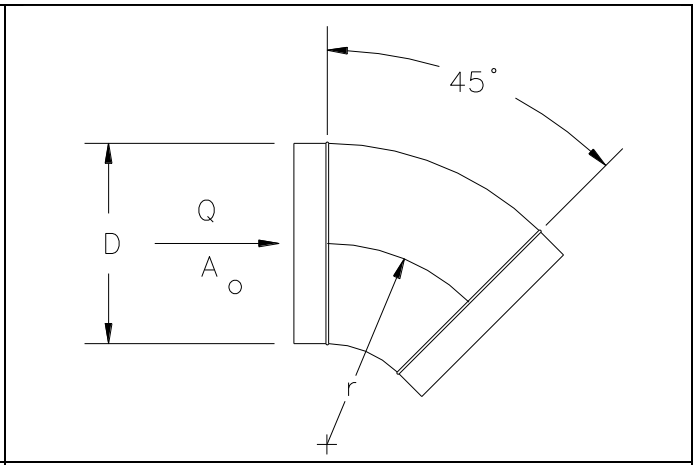

CD3-3

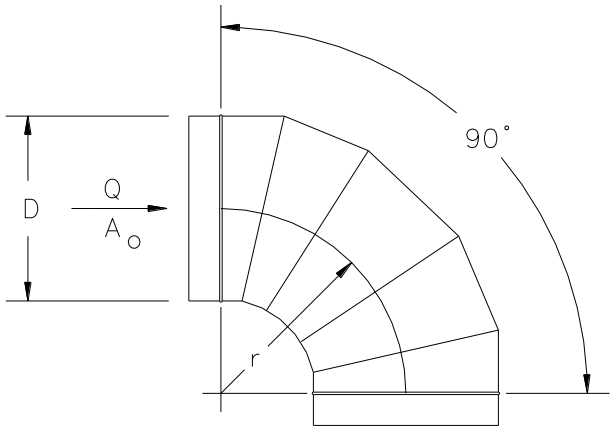

CD3-9

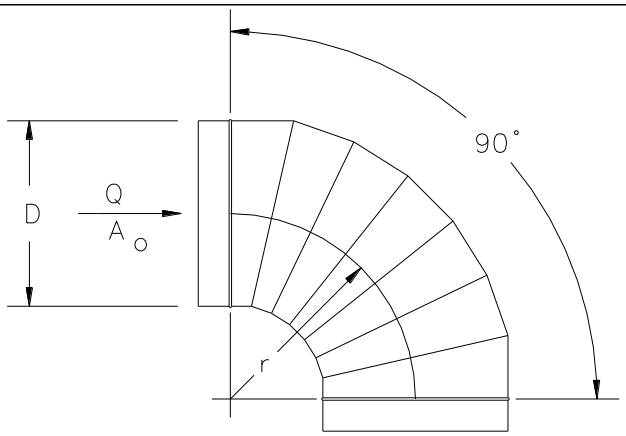

CD3-10

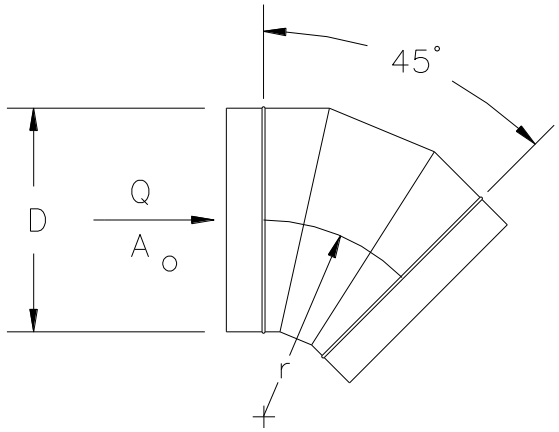

CD3-14

Round Wyes and Tees (see Table 7 in Part 3)

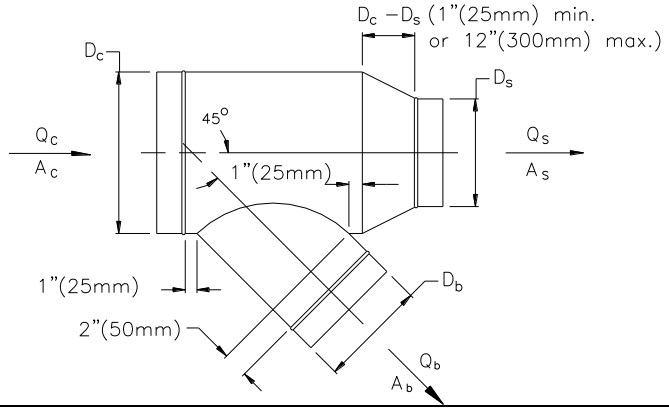

SD5-1

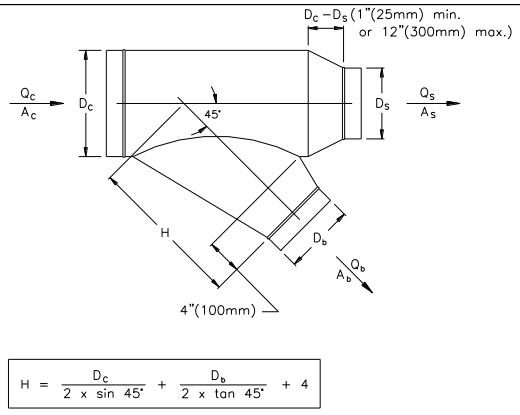

SD5-2

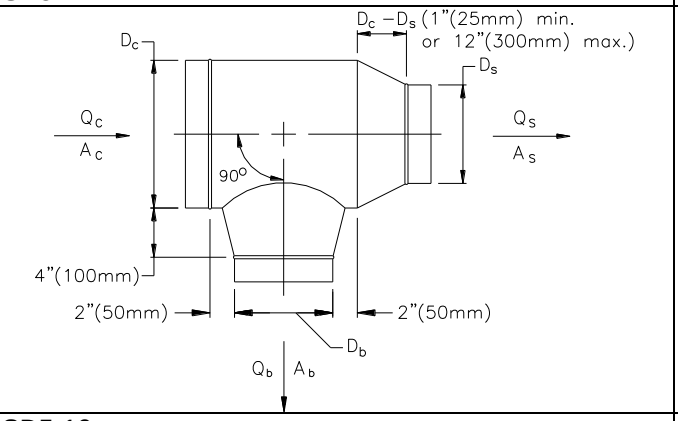

SD5-10

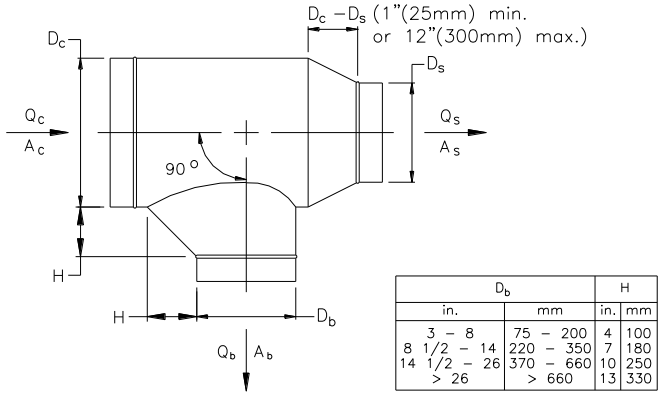

Db		H	
in.	mm	in.	mm
3 – 8	75 – 200	4	100
8 1/2 – 14	220 – 350	7	180
14 1/2 – 26	370 – 660	10	250
> 26	> 660	13	330

SD5-12

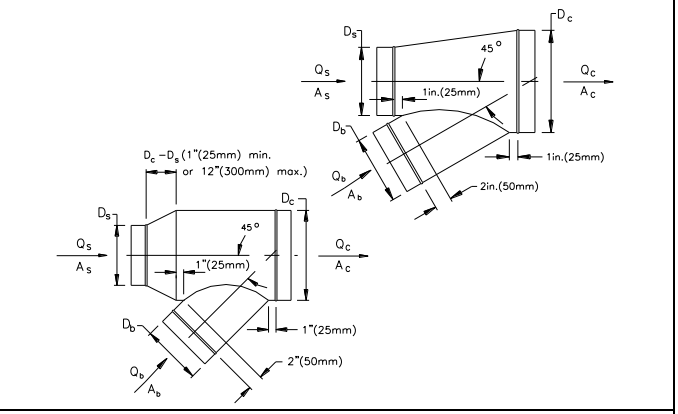

ED5-2

END OF SECTION

DUCT ACCESSORIES
23 33 05

1 GENERAL

1.1 Scope

.1 Provide duct accessories as shown.

.2 Access doors for kitchen grease ducts to conform to Specification section 23 31 13.23.

1.2 Applicable Codes and Standards

.1 Product standards:

.1 LEED v4 New Construction, Low-Emitting Materials credit

.2 ULC-S110 Standard Methods of Test for Air Ducts

1.3 Submittals

.1 Submit product data sheets for:

.1 flexible fan connectors,

.2 sealants,

.3 tapes,

.4 duct access doors and hardware,

.5 instrument test ports.

2 PRODUCTS

2.1 Flexible Fan Connectors

.1 Neoprene, non-insulated:

.1 fabric material: fire resistant, self-extinguishing, neoprene-coated glass fabric, density 0.653 kg/m^2 (0.13 lb./sq. ft),

.2 attachment frames: galvanized 0.66 mm (24 ga.) sheet metal frame, with fabric clenched with double locked seams,

.3 operating temperature: -40°C to 90°C (-40°F to 194°F),

° Duro-Dyne - fig. Durolon
° Ventfabric - fig. Ventglas
° Elgin - fig. Neoprene

.2 Vinyl coated, insulated:

.1 fabric material: flame resistant, 0.56 mm (0.022 in) thick vinyl coated fabric, encapsulating minimum 25 mm (1 in,) thick, 21 kg/m^3 (1.34 lb./cu ft) fiberglass insulation,

.2 attachment frames: galvanized 0.66 mm (24 ga.) sheet metal frame, with fabric clenched with double locked seams,

.3 operating temperature: 82°C (180°F) continuous and 93°C (200°F) intermittent,

Standard of Acceptance

° Duro-Dyne - fig. Insulflex

.3 Silicon rubber, non-insulated:

.1 silicon rubber-coated woven fiberglass fabric, density of 0.461 kg/m^2 (0.094 lb./sq. ft),

.2 attachment frames: galvanized 0.66 mm (24 ga.) sheet metal frame, with fabric clenched with double locked seams,

.3 operating temperature: up to 260°C (500°F).

Standard of Acceptance

° Duro-Dyne - fig. Thermafab

2.2 Duct Sealant

.1 Water-based polymer emulsion type, flame resistant duct sealing compound.

.2 Operating temperature range: -29°C to 93°C (-20°F to 200°F).

.3 Operating pressure: tested to operate at 2.5 kPa (10 in.w.c.) duct static air pressure,

.4 Meets requirements for SMACNA Class A, B and C duct sealing requirements.

.5 Listed to ULC-S102 with flame-spread rating of 25 or less and smoke-development classification of 50 or less.

.6 LEED requirements:

.1 meets requirements for LEED BD+C v4 credit for low emitting material – Paints and Coatings.

.2 manufacturer to supply documentation demonstrating compliance.

Standard of Acceptance

° Bakor - fig. Duck-Seal
° RCD - fig. #6 Mastic
° Childers - fig. CP-146
° McGill Air Seal - fig. United Duct Sealer (Water Based)
° Duro Dyne - fig, DWN (water based)

2.3 Tape

.1 Polyvinyl treated open weave glass fibre tape, 50mm (2") wide.

2.4 Access Doors for Standard-Duty Ducts

.1 Application: for general purpose HVAC ductwork.

.2 Low-pressure access doors:

.1 manufactured duct access doors, of same material as associated duct,

.2 pressure rating: 500 Pa (2 in.w.c.) positive and negative pressure,

.3 door panel:

(a) double-wall construction encapsulating 25 mm (1 in.) thick fibreglass insulation,

(b) minimum 0.7 mm (24 ga.) sheet thickness for both inner and outer panel,

(c) inside face of access door does not protrude into interior space of duct,

.4 door frame: minimum 0.7 mm (24 ga.) thick channels, with mounting tabs and neoprene door gasket,

.5 door size: 150x150 mm (6 x 6 in.) up to 600x600 mm (24x24 in.)

.6 door hardware:

(a) hinge: continuous length, galvanized steel piano hinge of same material as door,

(b) latch - standard: galvanized steel cam-latch,

(c) latch – secured: common-key operated latch,

(d) security chain when only provided with cam-latches.

Standard of Acceptance

- Ductmate
- Duro-Dyne

.3 High-pressure access doors – framed style:

.1 similar construction as for low-pressure framed access doors, except/and as specified below,

.2 pressure rating: 2500 Pa (10 in.w.c.) positive and negative pressure without measurable leakage under laboratory testing,

.3 hardware: cam-latch only,

(a) one (1) latch per door edge (total of 4) for 150x150 mm (6 x 6 in.) doors,

(b) two (2) latches per door edge (total of 8) for larger doors.

Standard of Acceptance

- Ductmate
- Duro-Dyne

.4 High-pressure access doors – frameless style:

.1 manufactured duct access doors, of same material as associated duct, for rectangular, round and flat-oval ducts,

.2 pressure rating: 2500 Pa (10 in.w.c.) positive and negative pressure without measurable leakage under laboratory testing,

.3 door panel:

(a) inner sandwich double-wall construction, encapsulating 25 mm (1 in.) thick fibreglass insulation, spot-welded seams, with smooth-faced finish where exposed to the airstream,

(b) outer pressure panel: stamped reinforced-exterior panel,

(c) neoprene gasket applied to inner panel face, positioned for positive or negative pressure applications,

(d) inside face of access door does not protrude into interior space of duct,

.4 door frame: none.

.5 door size: 200x100 mm (8 x 4 in.) up to 600x450 mm (24 x 18 in.)

.6 door hardware:

(a) two (2) spring-loaded pressure-retaining bolting system, with tool-less polypropylene knobs.

Standard of Acceptance

- Ductmate - fig. Sandwich Access Doors

2.5 Access Doors for Plenums

.1 Shop fabricated doors:

.1 double-wall construction, fully encapsulating 25 mm (1 in.) thick glass-fibre insulation,

.2 same material as duct, with both inner and outer panels of same thickness as associated plenum wall but not less than 0.6 mm (26ga.) thick,

.3 door frame: structural angles, galvanized steel minimum 2.0 mm (14 ga.) thickness, with continuous welded joints,

.4 gasket: automotive-style Neoprene gaskets bonded to door frame,

.5 door size: 500 mm wide x 1370 mm high (20 in. x 54 in.) except as otherwise shown,

.6 door swing:

(a) inwards for positive pressure plenums,

(b) outwards for negative pressure plenums.

.2 Door hardware:

.1 hinges: continuous piano hinge, zinc-plated steel or stainless-steel,

.2 handles: two (2) handles operable from both sides.

Standard of Acceptance

° Duro-Dyne - fig. SP-20 (door handles)

2.6 Instrument Test Ports

.1 Manufactured test ports:

.1 nominal size: Ø25 mm (1 in) minimum inside diameter, length to suit insulation thickness,

.2 extended body to accommodate 25 and 50 mm (1 and 2 in.) insulation thickness as applicable to the duct system,

.3 1.6 mm (16 ga.) thick steel body zinc plated after manufacture,

.4 chain-secured neoprene expansion plug with cam lock handle,

.5 Neoprene mounting gasket: flat for rectangular duct and moulded for round duct.

Standard of Acceptance

° Duro-Dyne - fig. TH1 or IP2

.2 Sealant for test port: high temperature silicone.

Standard of Acceptance

° Duro-Dyne - fig. Red High Temperature Silicon

3 EXECUTION

3.1 Flexible Fan Connectors

.1 Provide flexible fan connectors to isolate ductwork which is connected to the following equipment:

.1 fans,

.2 radiators on engine-drive equipment including generators and fire pumps,

.3 indoor suspended air handling equipment,

.4 indoor air handling equipment supported on spring isolators,

.5 outdoor air handling units supported on spring-isolated roof curbs,

.6 and as shown.

.2 For clarity, flexible fan connectors are not required for connection of ductwork to the following equipment:

.1 indoor air handling units with fans which have vibration isolation and where the unit is floor-mounted with or without elastomeric mounting pads,

.2 outdoor air handling units with fans which have vibration isolation and where the unit is mounted on a rigid roof curb.

.3 Flexible fan connector dimensions:

.1 minimum length: 75 mm (3 in) length of fabric measured in direction of air flow,

.2 minimum distance between metal parts when system is in operation: 25 mm (1 in).

.4 Use insulated type where connected ductwork is insulated.

.5 Use silicon-rubber type for laboratory exhaust ducting, and other process exhaust ducting conveying chemical vapours and gases.

.6 Do not install flexible fan connectors on NFPA 96 kitchen grease duct systems.

3.2 Sealant and Tape

.1 Apply sealant to ductwork joints and seams as detailed in other sections.

.2 Use of tape is limited to low-pressure systems requiring Class C

3.3 Access Doors for Standard Ducts

.1 Provide access doors in HVAC standard ducts in accordance with the following table:

Access Point	Location
Reheat coils	Both sides of coil
Fire dampers - replaceable thermal link type	Either side of damper
Motorized fire dampers, smoke dampers and combination smoke fire	On actuator side of damper
Motorized Dampers	Either side of damper
Duct smoke detectors	Across from or beneath sensor tube
Bottom of duct risers	Bottom of duct riser, or on backside of elbow

.2 Weld door frames in place for high velocity ductwork having air velocities in excess of 10 m/s (2500 fpm).

.3 Access door sizes:

.1 as large as possible, with 1:1.5 aspect ratio, for duct sides up to and including 360 mm (14 in),

.2 300 mm x 380 mm (12 in x 15 in) for duct sides 380 mm (15 in) and larger,

.3 1500 mm (60 in) high by 450 mm (18 in) wide in casings and plenums.

3.4 Access Doors for Plenums

.1 Provide access doors to plenums and casing in locations as shown.

.2 Weld door frames in place for plenums and casings.

3.5 Instrument Test Ports

.1 Install test ports for duct velocity traverse readings and for duct air temperature readings.

.2 Locate across duct or plenum at right angles to flow, at not more than 250 mm (10 in) intervals for traverses and at not more than 500 mm (20 in) for temperature measurements.

.3 Install test ports for velocity traverses in the following locations:

.1 at ducted inlets to roof and wall exhausters,

.2 at inlet to and outlet from other fan systems, and

.3 at main and branch ducts where branch serves more than one outlet. Ports in main to be upstream of branch in both diverging and converging flow.

.4 Install test ports for temperature measurement;

.1 at outside air intakes,

.2 at inlet and outlet of coils, and

.3 downstream of intersection of converging air streams of different temperatures.

END OF SECTION

MANUAL BALANCING DAMPERS
23 33 13.11

1 GENERAL

1.1 Scope

.1 Provide manual balancing dampers.

.2 This section does not apply to dampers installed in kitchen grease exhaust duct systems.

2 PRODUCTS

2.1 Splitter Dampers

.1 Shop-fabricated, single thickness construction, of same material as duct but one sheet metal gauge thickness heavier where both dimensions of damper blade are less than 300 mm (12 in).

.2 Double thickness construction, one metal gauge thickness lighter than duct, where either dimension of damper blade is 300 mm (12 in) or larger,

.3 Height equal to full depth of branch duct, and length 1½ times branch duct width.

.4 Fitted with piano hinge pivot, control rod, and locking device accessible from outside fitting.

2.2 Single Blade Dampers in Rectangular Ductwork

.1 Manufactured product.

.2 Blades and shaft:

.1 constructed of same material as the duct, with longitudinal V-grooves,

.2 blade thickness: 1.0 mm (20 ga.) minimum,

.3 blade length: 915 mm (36 in) maximum.

.4 bronze bearings,

.5 shaft extension with locking quadrant with 50 mm (2 in.) stand-off bracket.

.3 Frame:

.1 channel section of same material as duct, minimum 1.3 mm (18 ga.) thickness,

.2 angle blade stop.

Standard of Acceptance

- Nailor - fig. 1870
- Ruskin
- Greenheck

2.3 Multi-Blade Dampers in Rectangular Ductwork

.1 Manufactured product.

.2 Blades and shaft:

.1 constructed of same material as the duct, with longitudinal V-grooves,

.2 opposed blade configuration, with link assembly located out of airstream,

.3 blade thickness: 1.6 mm (16 ga.) minimum,

.4 blade height: 150 mm (6 in) maximum,

.5 blade length: 1200 mm (48 in) maximum.

.6 synthetic polymer or bronze bushings,

.7 shaft extension with locking quadrant with 50 mm (2 in.) stand-off bracket.

.3 Frame:

.1 channel section of same material as duct, minimum 1.6 mm (16 ga.) thickness,

.2 angle blade stop,

Standard of Acceptance

- Nailor - fig. 1820
- Ruskin
- Greenheck

2.4 Single Blade Dampers in Round Ductwork

.1 Manufactured product.

.2 Blades and shaft:

.1 constructed of same material as the duct,

.2 blade thickness: 0.86 mm (22 ga.) minimum,

.3 blade diameter: Ø100 to 500 mm (4 to 20 in. dia.),

.4 bearings: synthetic self-lubricating bushing,

.5 shaft extension with locking quadrant with 50 mm (2 in.) stand-off bracket.

.3 Frame:

.1 round duct section of same material as duct, minimum 0.86 mm (22 ga.) thickness, with stiffening beads,

.2 angle blade stop,

.3 stand-off bracket for locking quadrant for insulated ducts.

Standard of Acceptance

- Nailor - fig. 1890
- Ruskin
- Greenheck

2.5 Single Blade Dampers in Round Ductwork with Remote Cable Adjustment

.1 Manufactured product.

.2 Blades and shaft:

.1 constructed of same material as the duct,

.2 blade thickness: 1.0 mm (20 ga.) minimum with V brake centreline,

.3 blade diameter: Ø100 to 500 mm (4 to 20 in. dia.),

.4 bearings: synthetic self-lubricating bushing,

.5 shaft extension with 50 mm (2 in.) stand-off bracket.

.3 Frame:

.1 round duct section of same material as duct,

.2 wall thickness:

(a) Ø100 to 250 mm (4 to 10 in. dia,): 0.7 mm (24 ga.)

(b) Ø300 to 500 mm (12 to 20 in. dia,): 1.0 mm (20 ga.).

.3 angle blade stop,

.4 stand-off bracket for insulated ducts.

.4 Remote cable operator:

.1 damper blade gear operator:

(a) self-locking worm-gear regulator, suitable for 9.5 mm (3/8 in.) square or Ø13 mm (½ in.dia) damper shaft,

.2 flex-shaft cable:

(a) Ø6 mm (1/4 in.dia.) multi-core wound cable in flexible non-binding protective sheath,

(b) length: standard and custom lengths up to 15 m (50 ft),

(c) with brass end caps and threaded end fittings to attached to damper gear operator and adjustment operator,

.3 remote cable operator fixture:

(a) cable termination end for tool access,

(b) termination kit:

i) Ø60 mm (2-1/4 in. dia) zinc coated termination access housing, with prime coated cover plate, for self-clamping installation in drywall ceilings,

ii) remote cable operator kit for installation in slot diffuser plenum to allow tool access through diffuser slot.

Standard of Acceptance

° Young Regulators - fig. 5020CC with 270-275 cable operator

3 EXECUTION

3.1 Balancing Damper Locations and Type

.1 Provide balancing dampers in the following locations:

.1 at floor branches from a duct riser, use a single or multiple blade damper in the branch duct,

(a) where a wye-fitting is installed directly after the duct riser take-off, provide a balancing damper in each outlet branch after the wye fitting,

.2 for supply branch ducts that do not directly serve outlet grilles or diffusers, use a single or multiple blade damper in the branch duct,

.3 for exhaust or return branch ducts that do not directly serve inlet grilles, use a single or multiple blade damper in the branch duct,

.4 for branch duct which directly serve three or more grilles or diffusers (supply, return or exhaust), use splitter damper in the take-off fitting, or use a single or multiple blade damper in the branch duct,

.5 on the inlet to a supply air terminal unit, use a damper of the style to match the inlet duct connection to the air terminal unit,

.6 on the outlet from a return or exhaust air terminal unit, use a single or multiple blade damper in the branch duct.

.2 Provide other manual dampers as shown.

3.2 Access for Adjustment

.1 Locate dampers to allow adjustment of blade position and for locking of the quadrant.

3.3 Remote Cable Adjustment Station

.1 Use round balancing dampers with remote cable operators where:

.1 ceiling height is greater than 3.0 m (10 ft),

.2 ceiling height is less than 3.0 m (10 ft) and is not accessible, or

.3 elsewhere at the Contractor's discretion.

.2 Review with Consultant approximate location for each group of remote cable operators;

.1 exception: Consultant's review is not required when remote cable operator is located in a slot diffuser plenum.

.3 Group operators together within the limits of the allowable cable length.

.4 For ceilings up to 3.0 m (10 ft) in height, remote cable operators may be located in the following locations:

.1 within slot diffuser plenums, or

.2 mounted in or immediate above ceilings, with termination kit which passes through the ceiling to allow adjustment tool access from below ceiling.

.5 For ceilings greater than 3.0 m (10 ft) in height, group remote operators together in wall chase access in locations agreed by Consultant, positioned between 1200 and 1800 mm (4 and 6 ft) above the floor. Provide a wall mounted access cover with screwdriver door operator and prime coated finish.

.6 Where a service room, including mechanical rooms, electrical rooms, and janitor closets are available, mount the remote cable operator in those rooms on a wall mounted bracket. A panel enclosure is not required.

.7 Label each remote cable operator with a unique reference number, and mark-up as-built drawings to include the reference number for each applicable balancing damper.

END OF SECTION

Master revised: May 23, 2023

DAMPERS - FIRE AND SMOKE
23 33 13.16

1 GENERAL

1.1 Scope

.1 Provide fire dampers, smoke dampers, combination smoke/fire dampers, and ceiling fire stop flaps.

1.2 Related Sections

.1 Without limiting the scope of work or applicability of other specification sections, the work under this section directly integrates with or refers to the following specification sections:

.1 20 05 13.16 Wiring Requirements for Mechanical Services

1.3 Definitions

.1 The following definitions apply for this specification section:

.1 ***Damper*****:** means a smoke damper, motorized fire damper or combination smoke/fire damper.

(a) ***Balancing damper:*** : a damper with an electric actuator that is listed for operation as a modulating damper in normal service, to allow setting the damper at a position between open and closed, for system air balancing purposes.

(b) ***Dynamic damper***: a fire damper rated to close with airflow through damper at specified air velocities and operating pressure.

(c) Modulating damper: a damper with an electric actuator that is listed for operation as a modulating damper in normal service, to allow modulating control of the damper in response to a normal (non-emergency) process control requirement.

(d) Reopenable damper: a motorized fire damper of combination smoke/fire damper that can be electrically re-opened by bypassing the primary heat detection device.

(e) ***Static damper***: a fire damper rated only to close with essentially no airflow through the damper.

1.4 Applicable Codes and Standards

.1 Installation codes and standards:

.1	NFPA 80	Installation, Testing, and Maintenance of Fire Dampers
.2	NFPA 105	Standard for the Installation of Smoke Door Assemblies and Other Opening Protectives

.2 Product standards:

.1	AMCA 500-D	Laboratory Methods of Testing Dampers for Ratings.
.2	ANSI/CAN/UL/ULC 33	Heat Responsive Links for Fire-Protection Services
.3	CAN/ULC - S112	Standard Method of Fire Test of Fire Damper Assemblies
.4	CAN/ULC - S112.1	Standard for Leakage Rated Dampers for Use in Smoke Control Systems
.5	CAN/ULC - S112.2	Standard Method of Fire Test of Ceiling Firestop Flap Assemblies
.6	ULC-S505	Standard for Fusible Links for Fire Protection Services
.7	CSA C22.2 No. 14	Industrial Control Equipment

1.5 Submittals

.1 Submit manufacturer catalogue cut-sheets for the following materials;

.1 fire dampers,

.2 smoke dampers,

.3 combination smoke and fire dampers,

.4 motorized fire and smoke damper control accessories,

.5 fire stop flaps.

.2 When requested by an AHJ for building safety, submit confirmation data that the fusible link is listed to ULC-S505 or ANSI/CAN/UL/ULC 33.

2 PRODUCTS

2.1 General

.1 Approvals:

.1 Fire dampers and combination smoke/fire dampers listed to CAN/ULC-S112.

.2 Smoke dampers and combination smoke/fire dampers listed to CAN/ULC-S112.1.

.3 Ceiling fire stop flaps listed to CAN/ULC-S112.2.

.4 Fusible links for fire dampers listed to ULC-S505 or ANSI/CAN/UL/ULC 33.

2.2 Fire and Smoke Dampers - General Requirements

.1 Curtain damper styles:

.1 Type A: blade pack and frames in airstream,

.2 Type B: blade pack out of airstream,

.3 Type C:

(a) blade pack and frame out of airstream,

(b) for rectangular, round and flat oval ductwork, and

(c) sleeve joints and damper/sleeve joints sealed.

.2 Fire damper fire-resistance rating:

.1 Fire separation ratings 2 hr and less: 1-1/2 hrs.

.2 Fire separation rating 3 hr or more: 3 hr.

.3 Installation orientation:

.1 Dynamic and static dampers suitable for installation in vertical and horizontal separations.

.2 Dampers that are only listed for one orientation are not permitted.

.4 Rating class, dynamic dampers:

.1 Standard performance;

(a) air velocity, maximum 10 m/s (2000 fpm),

(b) operating static pressure, maximum 1000 Pa (4 in.w.c.)

.2 Extended performance (“EPxx”);

(a) air velocity, maximum 15 m/s (3000 fpm),

(b) operating static pressure, maximum 1000 Pa (4 in.w.c.)

.3 High velocity performance (“HVxx”);

(a) air velocity, maximum 20 m/s (4000 fpm),

(b) operating static pressure, maximum 1000 Pa (4 in.w.c.)

.5 Manufacturers:

Standard of Acceptance

- Nailor
- EH Price (National Controlled Air)
- Ruskin

2.3 Fire Dampers - Curtain Type

.1 Construction:

.1 Frame: G60 roll formed galvanized steel frame.

.2 Blades: curtain type, interlocking blades, G60 galvanized steel.

.3 Sleeve:

(a) same material as damper frame, length to suit application with steel enclosure and transition collars, and retaining angles.

(b) for type B damper sleeves, top of sleeve is formed closely around top of damper; sleeve construction that leaves the blade pack in the airstream is not permitted.

.4 Sleeve type: type A, B, or C as specified in Part 3.

.5 Fusible link: 71°C (160°F) unless otherwise shown.

.6 Notwithstanding the above, frame, sleeve, and blades to be stainless steel where damper is installed in a duct system which is stainless steel.

.7 Dynamic dampers: fitted with stainless steel closure spring, and rated for velocity and operating pressure based on rating class.

.8 Static dampers: fitted with stainless steel closure spring.

2.4 Fire Dampers - Multiblade Type

.1 Construction:

.1 Type: dynamic.

.2 Frame: G60 galvanized steel hat channel.

.3 Blades: airfoil multiblade type, interlocking blades, G60 galvanized steel;

(a) Parallel blade for Open-Closed operation,

(b) Opposed blade for modulating control or balancing control.

.4 Blade linkage: plated steel, concealed in frame (out of airstream).

.5 Bearings:

(a) On-Off control, and balancing: self-lubricated oil-tight bronze,

(b) modulating control: stainless steel.

.6 Jackshaft: cadmium plated steel.

.7 Internal locking quadrant for balancing maximum opening position.

.8 Sleeve: same material as damper frame, length to suit application with steel enclosure and transition collars, and retaining angles.

.9 Sleeve type: type A, B, or C as per listing requirements.

.10 Notwithstanding the above, the frame, sleeve, and blades to be stainless steel where damper is installed in a duct system that is stainless steel.

.2 Operator - fusible link:

.1 Torsion spring, with 74°C (165°F) fusible link unless otherwise shown.

.3 Operator – electric damper actuator:

.1 Factory installed electric damper actuator in accordance with article on Damper Actuators as required

(a) by certification listing for large dampers/damper bank applications, or

(b) where otherwise shown.

.2 Electric resettable heat detection switches, Normally Closed contacts opening on temperature rise above setpoint;

(a) setpoint temperature, non-reopenable damper: 74°C (165°F),

(b) setpoint temperature, reopenable damper:

i) primary switch: 74°C (165°F),

ii) secondary switch: 176°C (350°F).

2.5 Smoke Dampers

.1 Construction:

.1 Type: dynamic,

.2 Leakage rating: Class II at [121°C (250°F)][176°C 9350°F],

.3 Frame: G60 galvanized steel hat channel, with stainless steel jamb seals,

.4 Blades: airfoil multiblade type, interlocking blades, G60 galvanized steel;

(a) parallel blade for Open-Closed operation,

(b) opposed blade for modulating control or balancing control.

.5 Blade linkage: plated steel, concealed in frame (out of airstream),

.6 Bearings:

(a) On-Off control, and balancing: self-lubricated oil-tight bronze,

(b) modulating control: stainless steel.

.7 Jackshaft: cadmium plated steel.

.8 Sleeve: same material as damper frame, length to suit application with steel enclosure and transition collars, caulked joints, and retaining angles.

.9 Sleeve type: type A, B or C as per listing requirements.

.10 Notwithstanding the above, the frame, sleeve, and blades to be stainless steel where damper is installed in a duct system which is stainless steel.

.2 Operator – electric damper actuator:

.1 Factory installed electric damper actuator in accordance with article on Damper Actuators

.2 Fail Close type.

2.6 Combination Smoke and Fire Dampers

.1 Construction:

.1 Type: dynamic.

.2 Leakage rating: Class II at 121°C (250°F).

.3 Frame: G60 galvanized steel hat channel, with stainless steel jamb seals.

.4 Blades: airfoil multiblade type, interlocking blades, G60 galvanized steel;

(a) parallel blade for Open-Closed operation,

(b) opposed blade for modulating control or balancing control.

.5 Blade linkage: plated steel, concealed in frame (out of airstream).

.6 Bearings:

(a) On-Off control, and balancing: self-lubricated oil-tight bronze,

(b) modulating control: stainless steel.

.7 Jackshaft: cadmium plated steel.

.8 Sleeve: same material as damper frame, length to suit application with steel enclosure and transition collars, caulked joints, and retaining angles.

.9 Sleeve type: type A, B or C as per listing requirements.

.10 Notwithstanding the above, the frame, sleeve, and blades to be stainless steel where damper is installed in a duct system which is stainless steel.

.2 Operator – electric damper actuator:

.1 Factory installed electric damper actuator in accordance with article on Damper Actuators.

.2 Electric resettable heat detection switches, Normally Closed contacts opening on temperature rise above setpoint;

(a) setpoint temperature, non-reopenable damper: 74°C (165°F),

(b) setpoint temperature, reopenable damper:

i) primary switch: 74°C (165°F),

ii) secondary switch: 176°C (350°F).

2.7 Special Sleeve Modifications

.1 Special sleeve and damper arrangements for:

.1 single-sided retention angle installation,

.2 sleeve mounting tags for air diffusers and grilles directly attached to fire damper sleeve and wall opening. Dampers positioned in sleeve to allow for balancing damper installed on back-side of grille or diffuser.

2.8 Damper Actuators - Electric

.1 Actuators listed as part of the smoke and/or fire damper assembly.

.2 Actuators, components, wiring leads and position switches rated for 176°C (350°F).

.3 Two-position dampers:

.1 Spring return, fail-safe to a closed damper position.

.2 Open-Closed operation, with reduced motor load at holding (open) position, allowing continuous operation at open position without overheating or overload.

.3 Visual position indicator.

.4 Motor running time (to open): maximum 30 seconds.

.5 Spring running time (to close): maximum 30 seconds.

.6 Maximum power demand (motor driving): 40 VA.

.7 Power supply: 120 VAC, 60 Hz.

.4 Modulating dampers:

.1 Spring return, fail-safe to a closed damper position.

.2 True modulating control with proportional 0-10 VDC or 4-20 mA control input (floating point control not permitted), with 2-10 VDC position feedback.

.3 Visual position indicator.

.4 Motor running time (to open): maximum 60 seconds.

.5 Spring running time (to close): maximum 30 seconds.

.6 Maximum power demand (motor driving): 30 VA.

.7 Power supply: 24 VAC, 60 Hz.

.5 Damper position switches:

.1 Provided as part of each actuator.

(a) Exception: where more than one actuator is mounted to the same damper shaft for torque rating requirements, only one actuator connected to a damper shaft is required to have the damper position switch.

.2 Required for both two-position dampers and modulating dampers.

.3 Integral or factory installed damper position switches;

(a) 2 x SPST switches, 3 A resistive rating @ 120 VAC,

(b) prove damper open,

(c) prove damper closed.

2.9 Fire Stop Flaps (Ceiling Radiation Dampers)

.1 Construction:

.1 Galvanized steel frame and blades for round or square neck diffusers.

.2 Fitted with corrosion resistant steel springs and replaceable 71°C (160°F) fusible link.

.3 Supplied with thermal blanket cut to suit diffuser face plate dimensions and diffuser neck size.

.4 Labeled or listed and rated for both steel duct and flexible duct installations.

.5 Fitted with adjustable volume controllers where shown.

2.10 Local Damper Test Control Panel (Type “SD-1”)

.1 Construction:

.1 Damper manufacturer accessory product.

.2 Listed to CSA C22.2 No. 14, or conforms to applicable provincial electrical safety code for field approval or inspection.

.3 Momentary-action, normally closed switch (pushbutton or key operated), to spring return to damper Open position.

.4 Two damper proof-of-position indicating lights – Open and Closed.

.5 Enclosure: NEMA 1 (minimum) or galvanized steel face-plate for mounting on standard galvanized steel 100 x 100 mm electrical junction box.

.6 Suitable for field installation at or near the damper.

.7 Fuse holder and overcurrent protection fuse sized to suit damper actuator power requirements.

.8 Power supply: 120 VAC.

2.11 Identification Labels

.1 For field application to control panels.

.2 Thermal transfer printing, 300 dpi, black lettering on white background,

.3 Label text font height: minimum 36 point

.4 Self-adhesive polyester tape.

Standard of Acceptance

° Brady

3 EXECUTION

3.1 Installation – General Requirements

.1 Install fire dampers and fire stop flaps throughout supply, return and exhaust air systems in fire separations marked as having a fire resistance rating and as shown.

.2 Install smoke dampers and combination smoke/fire dampers at locations as shown and as follows:

.1 install smoke dampers and combination smoke/fire dampers for an air-transfer opening in the plane of the fire separation,

.2 install duct-mounted smoke dampers and combination smoke/fire dampers:

(a) in the plane of the fire separation, or

(b) within 610 mm (24 in.) of the plane of the fire separation, provided there are no inlet or outlet grilles or diffusers between the damper and the fire separation. The distance is measured from the centerline of the damper to the closest face of the fire separation.

.3 Install fire, smoke, and combination smoke/fire dampers in accordance with manufacturer's instructions, with sleeve, duct connections and angle supports to comply with terms and conditions of listing or classification and maintain integrity of fire wall and/or fire separation.

.4 Install stainless steel dampers in stainless steel duct systems and/or wherever ductwork is specified to be watertight construction.

3.2 Fire Damper Selection

.1 Select fire damper types as follows:

.1 “Dynamic” - all locations unless otherwise shown,

.2 “Static” - restricted to un-ducted transfer air openings.

.2 Select curtain-type fire damper styles as follows:

.1 For dynamic and static dampers:

(a) duct height in the following tables is the duct dimension perpendicular to blade length orientation.

Damper Velocity Class	Duct Height mm	Curtain Damper Style
Standard Performance (≤ 10 m/s)	> 300	A
	≤ 300	B
Extended Performance (10 to ≤ 12.5 m/s)	> 200	B
	≤ 200	C
High Velocity Performance (> 12.5 m/s)	Any	C

Damper Velocity Class	Duct Height In.	Curtain Damper Style
Standard Performance (≤ 2000 fpm)	> 12	A
	≤ 12	B
Extended Performance (2000 to ≤ 2500 fpm)	> 8	B
	≤ 8	C
High Velocity Performance (> 4000 fpm)	Any	C

3.3 Fire Damper Installation

.1 Where the duct size exceeds the maximum listing size of a multiple curtain damper assembly, provide multiblade fire dampers.

.2 Where fire dampers are shown to be motorized, provide multiblade fire damper with electric operator.

3.4 Damper Sleeves

.1 Provide factory-made damper sleeves in accordance with damper listing requirements, and as described herein.

.2 For multiblade dampers, smoke dampers, and combination smoke/fire dampers, fabricate sleeve style based on damper size listing requirements.

.3 Install damper sleeves with retaining angles in accordance with the damper manufacturer instructions.

.4 Where a diffuser or grille is shown at a fire damper, smoke damper or combination smoke/fire damper, provide sleeves specifically listed for single sided retention angles and which provide brackets for securing of the grille or diffuser to the sleeve.

.5 Where permitted by the damper manufacturer installation instructions, smoke dampers may be fastened directly to the duct without requiring the use of a sleeve.

3.5 Damper Access Doors

.1 Provide duct access door at each fire damper to permit visual inspection and replacement of fusible link. Do not locate access doors in a vertical service space (shaft).

.2 Provide duct access door at each smoke damper and combination smoke/fire damper, to permit visual inspection and service of fire detection/actuation mechanism. Provide such access doors even where dampers are provided with electrically supervised damper position indication.

.3 For curtain-type fire dampers in vertical ducts, the preferred access location is from the floor above the damper.

.4 For motorized fire dampers, smoke dampers and combination smoke/fire dampers installed in vertical ducts, position the damper actuator assembly so that it is not located in a vertical service space (shaft). Preferred position in order of priority and applicability are:

.1 above floor level in a service room,

.2 in the ceiling space below the bottom of a vertical service space.

.5 Install damper actuator assemblies on the room side of a damper isolating the room from a corridor, except where the duct ends at a wall grill.

3.6 Fire Stop Flap Installation

.1 Install fire stop flaps in accordance with manufacturers' instructions. Position supplied thermal blankets to cover ceiling diffusers.

3.7 Damper Power Supplies; Controlled Dampers

.1 This article applies to smoke dampers and combination smoke/fire dampers. This article also applies to motorized fire dampers identified on drawings as (“MFD”) which are required to be controlled by the building automation system or the fire alarm system.

.2 Power supply to these damper actuators is provided by Division 26.

3.8 Damper Power Supplies; Non-Controlled Dampers

.1 This article applies to fire dampers requiring electric actuators due to the limitations of damper size in accordance with each manufacturer product listing, but are otherwise not remotely controlled.

.2 Where a multiblade fire damper assembly requires an electric actuator because of limitations of its listing but not otherwise designated as a motorized fire damper (“MFD”), provide power and conduit in accordance with the requirements of specification section 20 05 12 except/and as otherwise specified herein:

.1 feed dampers from the nearest normal-designated 120 VAC power distribution panel,

.2 non-fire rated conductors may be used,

.3 provide 15 A breaker, with tamper lock, for each circuit,

.4 provide fuse protection for each actuator, sized as recommended by damper/actuator manufacturer installation instructions,

.5 maximum actuator load on each electrical circuit: 10 A,

.6 wiring and conduit:

(a) in accordance with specification section 20 05 12, and

(b) No. 14 AWG conductor size.

.7 each electrical circuit only to serve dampers located on the same floor (and same portion of a floor area if applicable) as the power distribution panel.

3.9 Identification

.1 Provide an identification label on each damper interface control panel, identifying the damper(s) by the duct service (supply, return, exhaust fan number) and room or space served. Coordinate with the supplier of any damper interface control panel to provide matching labeling.

3.10 Testing

.1 Conduct installation tests of all fire dampers, smoke dampers, and combination smoke/fire dampers in accordance with NFPA 80, NFPA 90A and NFPA 105 as applicable to damper type and summarized as follows.

.2 Field test all fire dampers, smoke dampers, combination smoke/fire dampers and fire stop flaps as follows:

.1 operate dampers to demonstrate unobstructed operation of the damper from open-to-close-to open state. These tests are to be performed while the fan systems are not in operation (static test),

.2 for static and dynamic (non-motorized) dampers, remove fusible links to demonstrate the dampers fully close and then reset the damper and replace the fusible link (“static test”).

.3 for motorized fire dampers, smoke dampers and combination smoke/fire dampers, confirm damper cycles close and open under normal HVAC air flow rates as well as at fire-condition air flow rates (“dynamic test”),

.4 confirm accessibility to components of fire damper, smoke dampers and combination smoke/fire dampers to permit maintenance and testing,

.5 where a damper is provided with an indicating device, confirm device functions and annunciates to the supervised location or system when the damper is in both the open and closed state, as applicable.

.3 Record test results as per the attached test form or similar containing the same information, and submit to Owner and Consultant as part of the Operations and Maintenance manual.

.4 Upon completion of testing, provide labour and resources necessary to conduct a demonstration re-test for up to [10%] of curtain-type dampers as selected and witnessed by Engineer or if requested by Authority Having Jurisdiction.

.5 Upon completion of testing, provide labour and resources necessary to conduct a demonstration re-test of 100% of all motorized fire dampers, smoke dampers and combination smoke/fire dampers. This test may be combined as part of the demonstration test of a smoke control system or a smoke exhaust system used to air fire fighters.

3.11 Standard Details

.1 Refer to the following standard detail for wiring of dampers with type SD-1 local test control panel.

23 33 15-011	Fire & Smoke Damper Control Wiring / Non-Reopenable / With Local Test (Type SD-1)

3.12 Test Form

.1 Test form follows at the end of this section.

TYPE SD-1

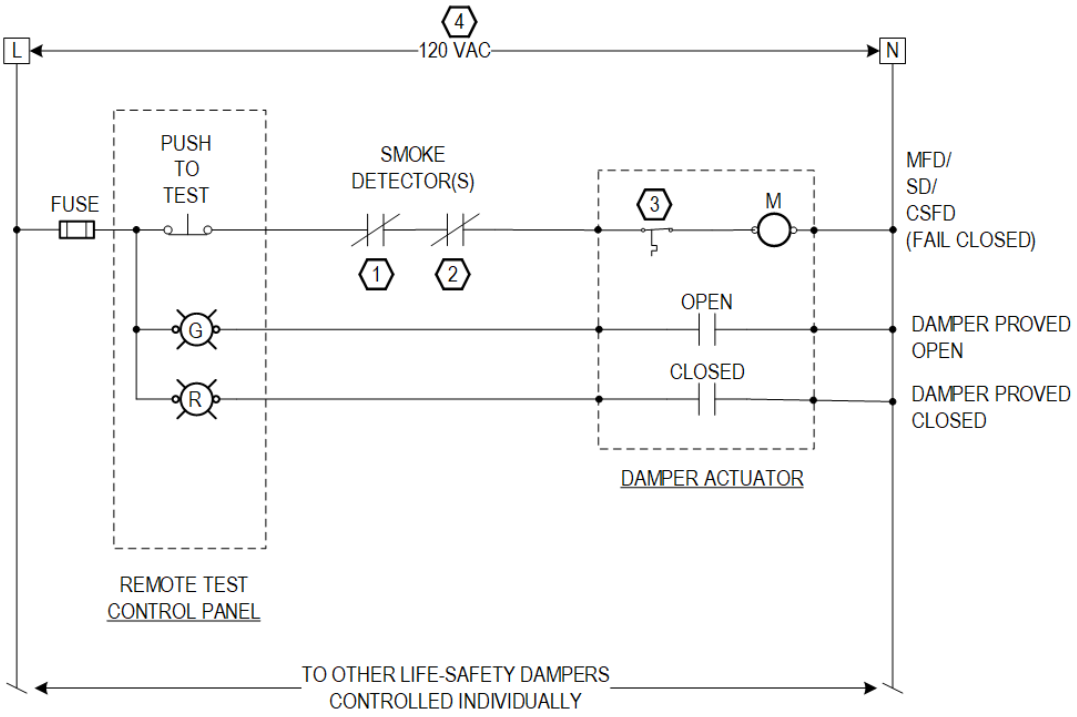

GENERAL NOTES

1. THIS DETAIL APPLIES TO LIFE-SAFETY DAMPERS THAT DO NOT FORM PART OF A SMOKE CONTROL SYSTEM.
2. THIS DETAIL APPLIES TO MOTORIZED FIRE DAMPERS (MFD), SMOKE DAMPERS (SD) AND COMBINATION SMOKE FIRE DAMPERS (CSFD).
3. PROVIDE A REMOTE TEST AND DAMPER POSITION INDICATION CONTROL PANEL.
4. THESE DAMPERS ARE NOT SUPERVISED OR CONTROLLED BY THE FIRE ALARM SYSTEM OR THE BUILDING AUTOMATION SYSTEM.
5. THIS DETAIL DRAWING IS INDICATIVE OF THE REQUIREMENTS AND IS SUBJECT TO THE SPECIFIC INSTALLATION INSTRUCTIONS OF THE SELECTED DAMPER MANUFACTURER.

REFERENCE NOTES:

(1) DUCT SMOKE DETECTOR, OR AREA SMOKE DETECTOR #1 FOR TRANSFER AIR OPENINGS (SD AND CSFD ONLY).

(2) AREA SMOKE DETECTOR #2 FOR TRANSFER AIR OPENINGS ONLY (SD AND CSFD ONLY).

(3) HEAT RESPONSIVE DEVICE (MFD AND CSFD ONLY)

(4) REFER TO DRAWINGS FOR NORMAL OR EMERGENCY POWER REQUIREMENTS.

HHAngus
1127 Leslie Street
Toronto, Ontario
M3C 2J6 Canada
T 416 443 8200
F 416 443 8290
hhangus.com

Sheet Title:
FIRE & SMOKE DAMPER CONTROL WIRING
NON-REOPENABLE
LOCAL TEST (TYPE SD-1)

Date:	Rev. No.:	Checked:
18-SEPT-2019	00	PS

Standard Detail No.
23 33 15-011

TEST RECORD - Fire, Smoke, and Combination Fire/Smoke Dampers

Project Name:		System Reference:	
Testing Company:		Inspection and Test Date:	
Technician Name:		Signed:	

Damper location		Damper Type	Static Test	Dynam. Test	Access Test	Deficiencies	Deficiency Corrected	Damper Audited
Floor	Nearest Room or Grid	[Note 1]	[Note 2]	[Note 3	[Note 4]			[Note 5]

Damper location		Damper Type	Static Test	Dynam. Test	Access Test	Deficiencies	Deficiency Corrected	Damper Audited
Floor	Nearest Room or Grid	[Note 1]	[Note 2]	[Note 3	[Note 4]			[Note 5]

Notes:

[1] Damper type designated: FD (curtain-type fire damper), MFD (motorized fire damper), SD (smoke damper), CSFD (combination smoke fire damper)

[2] Static test - damper tested with no airflow; applies to FD.

[3] Dynamic test - damper tested with airflow; applies to MFD, SD, CSFD.

[4] Damper and components are accessible for inspection, maintenance and repair.

[5] Damper selected by Consultant or Authority Having Jurisdiction for verification demonstration.

END OF SECTION

FLEXIBLE CONNECTORS
23 33 43

1 GENERAL

1.1 Scope

.1 Provide flexible connectors between rigid ductwork and air terminal devices, as shown.

.2 Flexible connectors not to be used where the supply air temperature exceeds 121°C (250°F).

1.2 Definitions and Abbreviations

.1 The following definitions apply to this section.

.1 ***Core*** – means the element of the flexible connector in direct contact with and containing the transported air.

.2 ***Flexible connector*** – means metallic and non-metallic round ducting that is used to connect rigid ductwork to air distribution terminal devices.

.3 ***Relative pressure drop coefficient*** – means the pressure loss of flexible connectors compared to a reference sheet metal duct pressure drop coefficient of 1.00 for same size duct and airflow rates.

.4 ***Terminal devices*** – means air grilles and diffusers.

1.3 Applicable Codes and Standards

.1 Installation codes and standards:

.1 SMACNA HVAC Duct Construction Standards Metal and Flexible

.2 Product standards:

.1 ULC S102 Standard Method of Test for Surface Burning Characteristics of Building Materials and Assemblies

.2 ULC S102.2 Standard Method of Test for Surface Burning Characteristics of Flooring, Floor Coverings, and Miscellaneous Materials and Assemblies

.3 ULC S110 Standard Method of Test for Air Ducts

.4 ULC 181 Factory Made Air Ducts and Connections.

1.4 Submittals

.1 Submit manufacturer's data sheets for each product showing;

.1 thermal properties,

.2 friction loss characteristics,

.3 acoustical insertion loss data,

.4 leakage rates,

.5 fire and smoke ratings,

.6 product listings and certifications.

2 PRODUCTS

2.1 General Requirements for Flexible Connectors

.1 Flame spread rating not to exceed 25 and smoke developed rating not to exceed 50 when tested in accordance with ULC-S102 or S102.2.

.2 Maximum manufactured unit length: 4 m (12 ft).

.3 Listed to ULC-S110 and UL 181 as a Class 0 or Class 1 product.

.4 Common requirements for metallic (aluminum) connector cores:

.1 material: spiral wound, corrugated flexible aluminum alloy with interlocked seams folded flat and rolled,

.2 design positive working pressure: 1.5 kPa (6 in. w.g) minimum,

.3 design negative working pressure: 0.25 kPa (1 in.w.g.) minimum,

.4 rated air velocity: 25 m/s (5000 fpm)

.5 minimum bending radius: 0.5 x duct diameter

.6 relative pressure drop coefficient: 2.0 maximum

.7 core air leakage: zero leakage.

2.2 Metallic Bare Flexible Connector

.1 Core: as specified above for metallic (aluminium) cores.

Standard of Acceptance

- TCE - fig. S
- Flexmaster - fig. T/L
- Peppertree - fig. TF

2.3 Metallic Insulated Flexible Connectors

.1 Core: as specified above for aluminium cores.

.2 Insulation layer: factory-applied outer insulation layer of flexible glass-fibre thermal insulation, maximum thermal resistance value of 0.74 $m^2 \cdot K/W$ (4.2 $ft^2 \cdot °F \cdot h$)/BTU

.3 Jacket: polyethylene or aluminium foil-skrim vapour barrier.

Standard of Acceptance

- TCE - fig. SIG, SIA
- Flexmaster - fig. T/L-T, T/L-M
- Peppertree - fig. TFT-M

2.4 Metallic Acoustic Flexible Connectors

.1 Core:

.1 as specified above for aluminium cores,

.2 core perforations: evenly distributed perforations of the core material, minimum 20-25% aggregate open area,

.2 Fibre isolation layer: polyethylene sheet wrapping around the core, separating the core from the insulation layer.

.3 Insulation layer: factory-applied outer insulation layer of flexible glass-fibre thermal insulation, minimum thermal resistance value of 0.74 $m^2 \cdot K/W$ (4.2 $ft^2 \cdot °F \cdot h$)/BTU

.4 Jacket: polyethylene or aluminium foil-skrim vapour barrier.

.5 Sound attenuation performance of not less than as shown in the following table:

Connector Size Dia. Ømm (in)	Centerband Frequency Hz					
	125	250	500	1000	2000	4000
	Minimum Insertion Loss dB per 3 m (10 ft) straight length of duct at 12.5 m/s (2500 fpm) air velocity ref. 20 μPa					
150 (6)	5	17	38	37	41	30
200 (8)	6	11	25	32	38	25
300 (12)	5	7	13	23	34	24

Standard of Acceptance

- TCE - fig. SAGIG, SAGIA
- Flexmaster - fig. T/L-AMG
- Peppertree - fig. TFAPB-PB, TFAPB-M

2.5 Fabric Insulated Flexible Connectors

.1 Core: chlorinated polyethylene (CPE) fabric, supported by helically-wound steel coil wire,

.2 Insulation layer: factory-applied outer insulation layer of flexible glass-fibre thermal insulation, minimum thermal resistance value of 0.74 $m^2 \cdot K/W$ (4.2 $ft^2 \cdot °F \cdot h$)/BTU

.3 Jacket: polyethylene or aluminium foil-skrim vapour barrier.

.1 design positive working pressure: 3.0 kPa (12 in. w.g) minimum,

.2 design negative working pressure: 1.25 kPa (5 in.w.g.) minimum,

.3 rated air velocity: 25 m/s (5000 fpm)

.4 minimum bending radius: 0.5 x duct diameter

.5 relative pressure drop coefficient: 2.0 maximum

.6 core air leakage: zero leakage.

2.6 Fabric Insulated Acoustic Flexible Connectors

.1 Core: fabric of chlorinated polyethylene (CPE), or XXX fabric, helically supported by steel coil wire,

.2 Insulation layer: factory-applied outer insulation layer of flexible glass-fibre thermal insulation, minimum thermal resistance value of 0.74 $m^2 \cdot K/W$ (4.2 $ft^2 \cdot °F \cdot h$)/BTU

.3 Jacket: polyethylene or aluminium foil-skrim vapour barrier.

.1 design positive working pressure: 3.0 kPa (12 in. w.g) minimum,

.2 design negative working pressure: 1.25 kPa (5 in.w.g.) minimum Ø100 to Ø400 mm.

.3 rated air velocity: 25 m/s (5000 fpm)

.4 minimum bending radius: 0.5 x duct diameter

.5 relative pressure drop coefficient: 2.0 maximum

.6 core air leakage: zero leakage.

.4 Sound attenuation performance of not less than as shown in the following table:

Connector Size Dia. Ømm (in)	Centerband Frequency Hz					
	125	250	500	1000	2000	4000
	Minimum Insertion Loss dB per 3 m (10 ft) straight length of duct at 12.5 m/s (2500 fpm) air velocity ref. 20 μPa					
150 (6)	7	31	40	38	40	27
200 (8)	12	29	36	35	38	22
300 (12)	21	28	29	33	26	12

Standard of Acceptance

- Peppertree - fig. HM
- Flexmaster - fig. 8M

2.7 Flexible Connector Sealing Compound

.1 Water based duct sealer, adheres to galvanized steel, aluminum and non-metallic flexible connector fabrics.

.2 Zero VOC content.

.3 High-solids content, low shrinkage, permanently flexible.

.4 Listed to ANSI/UL 181A.

Standard of Acceptance

- Durodyne - fig. EDS-RS
- Ductmate - fig. PROseal
- Transcontinental Equipment - fig. MP

3 EXECUTION

3.1 Restrictions on Use of Flexible Connectors

.1 Do not install flexible connectors that would pass through any wall, partition or floor.

.2 Do not use flexible connectors to connect rigid ductwork to the inlet of terminal units including variable volume or constant volume terminal units, with or without integral fans.

.3 Do not use flexible connectors on exhaust systems which convey:

.1 return or general exhaust air from commercial kitchens,

.2 exhaust air serving high humidity spaces including shower rooms, bathing rooms, pools,

.3 exhaust air serving cold-rooms with temperatures below 15°C (60°F),

.4 return or exhaust air serving medical device processing areas in healthcare facilities,

.5 exhaust air from laboratory fume hoods,

.6 contaminated exhaust air from process exhaust systems including hoods, exhausted cabinets and exhaust enclosures,

.7 exhaust air containing particulates.

3.2 Flexible Connector Installation

.1 Use the type of flexible connectors in accordance with the following:

.1 supply duct connections: insulated metallic

.2 return and exhaust duct connections: bare metallic.

.2 Maximum installed flexible connector lengths:

.1 supply air: 2 m (6 ft).

.2 return/exhaust air: 1 m (39 in.).

.3 The centre-line radius of bends in flexible connector to be at least equal to one duct diameter or larger.

.4 Apply sealing compound at connection points between sheet metal and flexible connector. Apply the sealing compound to the sheet metal prior to placing the flexible connector over the sheet metal, to minimize ingress of sealant into the airstream.

.5 Overlap flexible connectors onto rigid ductwork and diffuser/grill collars by not less than 50 mm (2 in.), and to fully overlap the sheetmetal connector on diffusers and grilles.

.6 For metallic flexible connectors, secure the core material to the sheet metal with #8 sheet metal screws as follows:

.1 for connectors sizes Ø300 mm (12 in.dia.) and smaller, with at least three screws equally spaced around the connector,

.2 for connector sizes larger than Ø300 mm (12 in.dia.), at least five screws equally spaced around the connector,

.3 the screws installed at least 12 mm (1/2 in.) from the end of the connector,

.7 For non-metallic flexible connectors, secure the core material to the sheet metal with a Panduit-type draw-band. Locate the draw-band behind a bead on the metal collar.

.8 Fit insulation and vapour barrier jackets over the core connection and secure with a Panduit-type draw band.

3.3 Rigid Duct Collar Construction

.1 Provide a rolled external bead on rigid duct connection collars, located at least 25 mm (1 in.) from the end of the collar.

3.4 Connections to Exhaust Grills

.1 Where a flexible connector is to be connected to an exhaust grill, order the grill with a backing plenum with applicable sized sheet metal connector.

.2 Where an exhaust grille is not provided with a factory plenum and connector, shop fabricate a plenum that;

.1 has the same plan dimensions as the exhaust grille and having a depth of not less than:

(a) 75 mm (3 in) for a back-inlet connection,

(b) at least 50 mm (2 in) greater than the diameter of the flexible connector for a side-entry connection,

.2 has a sheet metal connector of a diameter to suit the flexible connector and having a depth of not less than 50 mm (2 in.).

END OF SECTION

HVAC FANS
23 34 16

1 GENERAL

1.1 Scope

.1 Provide centrifugal and axial HVAC fans of type, size and performance as shown.

1.2 Related Sections

.1 Without limiting the scope of work or applicability of other specification sections, the work under this section directly integrates with or refers to the following specification sections:

- .1 20 05 01 Basic Materials and Methods
- .2 20 05 13 Common Motor Requirements for Mechanical Equipment.

1.3 Applicable Codes and Standards

.1 Product standards:

- .1 ABMA 9 Load Ratings and Fatigue Life for Ball Bearings
- .2 ABMA 11 Load Ratings and Fatigue Life for Roller Bearings
- .3 AMCA 99 Standards Handbook
- .4 AMCA 204 Balance Quality and Vibration Levels for Fans
- .5 AMCA 205 Energy Efficiency Classification for Fans
- .6 AMCA 210 Laboratory Methods of Testing Fans for Certified Aerodynamic Performance Rating
- .7 AMCA 211 Certified Ratings Program – Product Rating Manual for Fan Air Performance
- .8 AMCA 300 Reverberant Room Method for Sound Testing of Fans,
- .9 AMCA 311 Certified Ratings Program – Product Rating Manual for Fan Sound Performance
- .10 AMCA 320 Laboratory Methods of Sound Testing Fans Using Sound Intensity
- .11 ASME B117 Standard Practice for Operating Salt Spray (Fog) Apparatus

1.4 Design Criteria

.1 Fan rating conditions:

- .1 elevation: project site elevation-based.
- .2 airflow design temperature:

Application	Temperature
Conditioned space return air or exhaust air fans	21°C (70°F)

1.5 Submittals

.1 Submit product data sheets for materials specified herein. Submittals to include:

- .1 Dimensioned standard drawings indicating dimensions, motor mounting details, inlet and outlet connection details, and equipment weight,

.2 motor ratings and characteristics,

.3 drive arrangements including drive-set details,

.4 AMCA certified performance curves for each fan showing airflow, static pressure, efficiency point, fan RPM, and power input as KW (brake horsepower) from shut-off to free delivery through scheduled rating point, and also show fan curves for fan RPM at 15% above and 15% below this curve.

.5 certified sound power data for supply, return and exhaust fans.

.6 specified accessories.

.2 Operating and maintenance data:

.1 provide operation and maintenance data for incorporation into operating and maintenance manuals,

.2 include factory test vibration analysis report for fans with motor power ratings greater than 15 kW (20 hp).

1.6 Quality Control

.1 Fan performance for airflow rate, fan pressure, fan power, air density, fan RPM and fan efficiency: certified and bear the AMCA seal to AMCA Publication 211 when tested in accordance with AMCA Standards 210.

.2 Fan acoustic performance: certified and bear the AMCA seal to AMCA Publication 311 when tested in accordance with AMCA Standard 300 or AMCA Standards 320.

.3 Fan energy efficiency: rated in accordance with AMCA Standard 205.

.4 Fan vibration: factory vibration tested prior to shipment as a completed assembly, in accordance with AMCA Standard 204 and as follows:

.1 tested at the specified fan RPM,

.2 vibration signature measured at each fan bearing in the horizontal, vertical and axial directions,

.3 maximum allowable fan vibration level: grade G6.3 to AMCA Standard 204, at 3.8 mm/s (0.15 in/sec) peak velocity, filter-in, with the fan rigidly mounted,

.4 vibration test records are to be retained by the manufacturer and copies to be made available to the Owner on request.

2 PRODUCTS

2.1 General

.1 Space allocation, motor sizes, base details, connection arrangements and performance are based on fan equipment by manufacturers as shown in schedules.

.2 Fans to be of same manufacture for similar applications, but may be chosen from other manufacturers' product lines for other different applications, and are to be selected from manufacturer's catalogued range of standard products.

Standard of Acceptance

- New York Blower (Northern Industrial Supply)
- Barry Blower/Pennbarry)
- Chicago Blower
- CML Northern Blower
- Trane

- Greenheck
- Loren Cook
- Twin City
- Industrial Air
- Woods
- Carnes
- Acme

2.2 Selection Criteria

.1 Select fan size, operating RPM and rating point on stable part of head flow curve with smooth characteristics.

.2 Except as specified elsewhere in this Section, select fans (excluding motors) so that the fan construction will permit fan operation up to 125% of the design static pressure and airflow rate, individually and concurrently, without requiring modifications to this equipment.

2.3 Construction General Requirements

.1 Fan class to conform with AMCA 99-2408, Operating Limits for centrifugal fans.

.2 Operating temperature range: fans to be constructed to be suitable for operation from -40°C (-40°F) up to the temperatures specified under article Design Criteria.

.3 Fan housing and impeller:

.1 statically and dynamically balanced impeller,

.2 operating at least 20% below first critical speed when operating at maximum speed for class of construction,

.3 continuously welded steel housing, unless other materials are shown, with integral reinforcing bracing, and spun inlet cones,

.4 pre-punched flanges for ductwork connections,

.5 interior and exterior surfaces factory cleaned and primed with zinc-rich coating, and finished in manufacturers standard top coat,

(a) where shown on equipment schedules, coatings for surfaces contacting airstream: Heresite coated for carbon steel materials.

(b) coating performance to meet 1000 hour salt spray test in accordance with ASME B117.

.4 Fan shaft:

.1 steel shaft, turned, ground and polished, and protected with a petroleum-based rust preventative coating,

.2 sized for first critical speed at a minimum of:

(a) 1.25 times maximum speed for fan Class I and II, and

(b) 1.40 times maximum speed for fan Class III and IV.

.3 key shaft to the wheel hub,

.5 Fan bearings:

.1 grease lubricated self-aligning ball or roller type with oil retaining, dust excluding seals,

.2 cartridge type for shafts less than 37 mm (1 - 7/16 in) diameter,

.3 shaft adapter sleeves with horizontally split pillow blocks and mechanical flinger type grease valves for shafts 37 mm (1 - 7/16 in) diameter or larger,

.4 interference fit rather than adapter sleeve type on shafts 56 mm (2 - 3/16 in) and larger

.5 furnished with drain plugs,

.6 fitted with extended grease lubricating lines where access is restricted,

.7 packed with grease at factory,

.8 chosen for 125% of rotational speed at point of selection, and with an L_{10} service life rating of 40,000 hours in accordance with ABMA 9 or ABMA 11.

.6 Fan configuration (unless shown or noted otherwise):

.1 Arrangement #1 or #2 for single inlet, single width, belt driven fans up to and including 915 mm (36 in) wheel diameter.

.2 Arrangement #3 for belt driven single inlet fans with wheel diameter larger than 915 mm (36 in) diameter and belt driven double inlet fans.

.3 Arrangement #3 for plenum (plug) fans.

.4 Arrangement #10 for utility sets.

.5 Arrangement #8 for direct connected single inlet centrifugal fans.

.6 Arrangement #7 for direct connected double inlet fans.

.7 Variable volume devices:

.1 adjustable inlet vanes,

.2 operated from mechanism, with locking device for manual operation, linked to each damper vane, and interconnecting vanes in each inlet of DWDI fans

.8 Fan/motor drives and guards:

.1 pulleys and drive belts to conform to Section 20 05 01,

.2 guards for fan/motor belt-drive and couplings, to conform to Section 20 05 01,

.3 guards for fan inlet openings to conform to Section 20 05 01.

.9 Fan motors:

.1 motors to conform to Section 20 05 13, except/and as specified herein,

(a) minimum motor power rating: not less than motor kW (horsepower) shown in equipment schedules, and

(b) capable of satisfactory operation without motor overload or operation in the motor service factor, over a performance range from shut-off to run-out at 115% of rotational speed at point of selection.

.2 motor slide rails to conform to Section 20 05 01,

2.4 Centrifugal Fans

.1 Arrangement:

.1 rotation, discharge and motor position to be as shown,

.2 unless otherwise shown, fan classification to be selected to permit operation at 125% of rotational speed at point of selection.

.2 Fan wheels:

.1 backward curved or backward inclined blades for fan wheel diameters less than 686 mm (27 in), backward curved air foil blades for fan wheel diameters 686 mm (27 in) and larger.

.3 Accessories:

.1 38 mm (1 - ½ in) casing drains where fans discharge vertically,

.2 access doors in scroll casing,

.3 stuffing box style shaft seals on single inlet single width fans and utility sets.

2.5 Plenum (Plug) Fans

.1 Arrangement:

.1 rotation, discharge and motor position to be as shown, with motor mounted on frame,

.2 unless otherwise shown, fan classification to be selected to permit operation at 125% of rotational speed at point of selection.

.2 Fan wheels:

.1 backward curved air foil blades.

.3 Accessories

.1 outlet cage,

.2 inlet collar.

2.6 Cabinet Fans

.1 Construction:

.1 single or multiple wheel DWDI centrifugal fans with motor and V-belt drive, selected in accordance with requirements for centrifugal fans,

.2 arranged with not less than 0.75 wheel diameter clearance between fan inlet and plenum wall,

.3 factory fabricated casing of zinc coated or phosphate treated steel of 1.6 mm (16 ga) thickness, reinforced and braced for rigidity,

.4 removable panels for access to internal parts,

.5 internally lined cabinet with 50 mm (2 in) thick rigid acoustic insulation,

.6 expanded metal mesh over insulation on floor.

3 EXECUTION

3.1 Fan installation

.1 Mount fans as shown, with vibration isolation, restraining snubbers, flexible electrical leads, and flexible connections to inlet and discharge ductwork.

.2 Align shafts, belt drive and motor, and adjust belt static tension based on measured belt deflection test in accordance with drive manufacturer instructions.

.3 Confirm and check motor rotation before start-up.

3.2 Protection

.1 Provide temporary enclosures for open drip proof motors.

.2 Cover fan inlet and discharge openings during construction to prevent ingress of foreign objects into the fan housing.

.3 Rotate fans, by hand, every month between delivery and acceptance of building.

3.3 Start-Up and Testing

.1 During system air balancing, adjust sheaves on variable pitch belt drives, adjust blade pitch of axial flow fans, and change pulleys and belts on fixed pitch belt drives, to achieve specified air quantities.

END OF SECTION

AIR TERMINAL UNITS
23 36 13

1 GENERAL

1.1 Scope

.1 Provide air terminal units as shown.

.1 supply air terminal units,

.2 supply air terminal units with reheat coils,

1.2 Related Sections

.1 Without limiting the scope of work or applicability of other specification sections, the work under this section directly integrates with or refers to the following specification sections:

.1	20 05 12	Common Electrical Requirements for Mechanical Services
.2	23 82 16.16	Hydronic Duct Mounted Air Coils
.3	25 05 11	Building Automation Control Panels and Wiring
.4	[25 14 17	Building Automation Terminal Unit Controllers
.5	25 15 16	Building Automation Software for Control and Monitoring
.6	25 30 13	Building Automation Actuators and Operators]

1.3 Applicable Codes and Standards

.1 Product standards:

.1	AHRI 880	Standard for Performance Rating of Air Terminals
.2	ANSI/ASHRAE 130	Laboratory Method of Testing Air Terminal Units
.3	ASTM C1071	Standard Specification for Fibrous Glass Duct Lining Insulation (Thermal and Sound Absorption Material)
.4	CSA C22.2 No. 66.3 / UL 5085-3	
.5		Low Voltage Transformers – Part 3: Class 2 and Class 3 Transformers
.6	CSA C22.2 No. 94.1	Enclosures for Electrical Equipment, Non-Environmental Considerations
.7	CAN/ULC-S102.2	Standard Method of Test for Surface Burning Characteristics of Flooring, Floor Coverings, and Miscellaneous Materials and Assemblies.

1.4 Submittals

.1 Shop drawings:

.1 Submit manufacturer's data sheets with;

(a) equipment model numbers, performance and design data, outline dimensions, enclosure details, support and connection arrangements and electrical power requirements where applicable.

(b) schedules listing discharge and radiated sound power level for each of the second through seventh octave bands (125 - 4000 Hertz) at specified differential static pressures.

2 PRODUCTS

2.1 General Requirements

.1 Factory-assembled terminal units, with performance ratings in accordance with AHRI 880, and bearing the AHRI seal for an air volume control terminal with damper assembly and flow sensor.

Standard of Acceptance

- E.H. Price
- Titus
- Environmental Technologies
- Nailor Industries.
- Carnes
- Metalaire

.2 Airflow performance tested and rated in accordance with ASHRAE standard 130.

.3 Unit performance rating to be over the following inlet static pressure range:

.1 maximum inlet air pressure: 750 Pa (3 in wg),

.2 minimum inlet air pressure: 75 Pa (0.3 in wg),

.4 Except where the terminal unit size is shown on drawings and/or schedules, select terminal unit sizes so that design airflow rates as shown do not exceed 70% of manufacturers published maximum air flow rate.

.5 Terminal unit sizes (e.g. size 6 as shown on drawings or equipment schedules) are based on E.H.Price model SDV for physical dimensions and airflow performance range.

.6 Acoustic performance:

.1 maximum room sound pressure level (referenced at 2×10^{-4} microbar) at 250 Pa (1 in.w.c.) inlet pressure to be less than:

(a) NC [40]at discharge and NC [42]radiated for units with attenuator mounted exposed (without ceiling),

2.2 Single Duct Air Terminal Units

.1 Casing:

.1 galvanized steel, minimum 0.76 mm (22 ga) thickness, with lock-seam longitudinal joints,

.2 casing leakage:

(a) not to exceed 1.0% of maximum rated airflow at an inlet pressure of 250 Pa (1 in.w.c.) as tested in accordance with ASHRAE 130,

(b) includes casing penetrations for damper rods, etc,.

(c) includes component connection joints for factory supplied accessories including reheat coils and duct attenuators, silencers,

(d) randomly selected terminal units are subject to field leakage test in accordance with Part 3 of this Specification section.

.3 entire casing lined on all faces with acoustic attenuation liner,

.4 inlet connection: circular with slip end and rolled bead duct-stop,

.5 discharge connection: rectangular with slip-and-drive connection,

.6 minimum unit length with reheat coils;

(a) reheat coil to be mounted at the outlet of attenuator or silencer,

(b) where no attenuator or silencer is required to meet acoustic performance, terminal unit length to be not less than 900 mm (36 in) between the outlet of the air valve and the inlet face of the reheat coil,

(c) unit extensions provided with liner through entire length.

.2 Control damper / valve assembly:

.1 minimum 1.2 mm (18 ga) thick galvanized steel damper blade with solid shaft rotating in bearings,

.2 damper position indicator permanently attached or formed into damper shaft,

.3 damper blade edge gasket for tight airflow shut-off, and two reference stop pins for the 0% and 100% open positions,

.4 air leakage in closed position: ≤ 2% of unit maximum airflow at 750 Pa (3 in.w.c.) inlet static pressure and tested in accordance with ASHRAE 130.

.3 Control enclosure:

.1 factory mounted on side of terminal unit,

.2 painted steel electrical enclosure, Type 1 listed to CSA C22.2 No. 94.21 (NEMAI 1), with

(a) removable cover,

(b) wiring knockouts,

(c) integral backplane for mounting of control devices, constructed so there are no exposed screw tips.

.3 control transformer:

(a) factory mounted and wired 120/24 VAC Class 2 current limited control transformer,

(b) listed to CSA C22.2 No. 66.3,

(c) of size to suit terminal unit DDC controller, and disconnect switch.

.4 enclosure side-mounted disconnect switch.

.4 Airflow velocity sensor:

.1 airflow sensor fully removable for cleaning,

.2 total and static differential pressure sensor, mounted in inlet duct,

.3 fire-resistant plastic elements conforming to UL 94,

.4 not less than 12 total pressure sample ports and four (4) static pressure ports, with center averaging chamber,

.5 sensor accuracy after field calibration: velocity sensor measured flow to be within ±5% of externally measured value, over the terminal unit published flow range, and independent of inlet duct arrangement,

.6 sample tubing provided with protective grommets where tubing passes through metal duct and enclosure.

.5 Sound attenuator:

.1 sound attenuators used on terminal unit sizes 10 and smaller,

.2 constructed as an extension of the terminal unit casing assembly,

.3 attenuator construction: same as for terminal general casing complete with liner,

.4 attenuator length: not less than [900 mm (3 ft)][1500 mm (5 ft)],

.5 attenuator liner: as specified in article “Liner”.

.6 [Acoustic Liner – fiberglass:

.1 liner acoustic/thermal media:

(a) flexible or semi-rigid, dual-density, fibrous glass duct liner, with air-facing side factory sealed with acrylic coating and flexible glass cloth reinforcement, and factory sealed edges, to ASTM C1071,

(b) listed to UL 2818 for low VOC content,

(c) surface mat treated with EPA-registered anti-microbial agent,

(d) insulation resistance: RSI 0.74 (R4.2)

(e) thickness: 25 mm (1 in),

(f) maximum air velocity: 30 m/s (6000 fpm),

(g) service temperature: 121°C (250°F) to ASTM C411,

(h) listed to CAN/ULC-S102, with flame spread rating not to exceed 25 and a smoke development rating not to exceed 50,

(i) field applied sealer applied to cut edges and damaged surfaces, as recommended by duct lining manufacturer, so there are no exposed unprotected media surfaces.

.2 liner media fastened to inside of unit casing with 100% adhesive coverage and mechanical pin fasteners and retention heads:

(a) 2.0 mm (1/16 in) diameter pins,

(b) length selected to suit thickness of insulation,

(c) 32 mm (1¼ in) square Nylon retaining clips.

.3 [liner media protective coverings:

(a) a Mylar or Tedlar film, encapsulating the air-facing surface and all cut-end edges, and

(b) an additional protective overlay of perforated galvanized steel.][]

.7 [Liner – Foil Faced rigid fiberglass board:

.1 liner acoustic/thermal media:

(a) rigid fiberglass insulation board, with bonded aluminum foil-scrim-draft (FSK) facing, to ASTM C1071,

(b) insulation resistance: RSI 0.76 (R4.3)

(c) density: 48 kg/m3 (3.0 lb/cu ft),

(d) thickness: 25 mm (1 in),

(e) maximum air velocity: 30 m/s (6000 fpm),

(f) service temperature: 121°C (250°F) to ASTM C411,

(g) listed to CAN/ULC-S102, with flame spread rating not to exceed 25 and a smoke development rating not to exceed 50,

(h) field applied sealer applied to cut edges and damaged surfaces, as recommended by duct lining manufacturer, so there are no exposed unprotected media surfaces.

.2 liner protective coverings:

(a) all edges sealed with metal caps (nosing), and a metal corner angles at panel junctions.

.8 Access doors

.1 factory installed access doors;

(a) field installation of access doors are prohibited.

.2 where required:

(a) on supply air units only, downstream of the control damper and (where applicable) upstream of a reheat coil.

(b) for clarity, access doors are not required on exhaust or return air terminal units.

.3 door location: bottom of the terminal unit to allow access to damper assembly and upstream face of reheat coils,

.4 fabricated from galvanized steel, minimum 0.76 mm (22 ga) thickness,

.5 19 mm (3/4") thick internal insulation, same material as liner,

.6 size: 150 x 100 mm (6 x 4 in),

.7 fastening: [screws][snap latches][quarter turn sash latches].

2.3 Silencer

.1 Silencers used on terminal unit sizes 12 and larger, or where acoustic performance requires them for smaller units.

.2 Construction:

.1 aero-dynamic shaped sound absorbing baffles, with perforated metal liners and acoustic media,

.2 acoustic media: fiberglass acoustic media, encapsulated within a Mylar or Tedlar film to separate acoustic media from the airstream,

.3 lengths:

(a) terminal unit size 10 and smaller: minimum 900 mm (36 in),

(b) terminal unit size 12 and larger: minimum 1.5 m (5 ft).

2.4 Hydronic Reheat Coils

.1 Conform to specification section 23 82 16.16.

.2 Heat output as shown.

.3 Factory mount reheat coil at the outlet of the attenuator, silencer, or terminal unit casing extension.

2.5 Controllers

.1 DDC controller – Supplied Free-Issue by BAS Contractor:

.1 Direct Digital Control (DDC) controller with damper actuator to be supplied by BAS contractor under Division 25, free-issue (FOB destination, freight prepaid) to terminal unit manufacturer for factory mounting by terminal unit manufacturer,

.2 costs associated with receiving, storage, installation and calibration to be included by Terminal Unit Manufacturer.

3 EXECUTION

3.1 Terminal Unit Installation

.1 Support terminal units independent of connecting ductwork and piping. Support terminal unites from building structure with angles, hangers and supplementary steel before installation of piping and connecting ductwork.

.2 Provide seismic restraints for terminal units independent of restraints for joining ductwork, where seismic restraints are required for the project.

.3 Provide access door in ductwork on the downstream side of reheat coil:

.1 size: minimum 150 mm x 100 mm (6 in x 4 in),

.2 located with 100 mm (4 in) of discharge face of reheat coil.

3.2 Ductwork Connections

.1 Connect inlet ductwork with spiral flat seam round duct of same diameter as terminal unit inlet.

.2 Size connecting discharge ductwork as same size as terminal unit outlet.

.3 Support outlet ductwork independent from terminal unit.

.4 Seal openings in box and attenuator for reheat coil and connections, control, and power wiring.

3.3 Piping Services

.1 Provide heating piping, valves and accessories in accordance with specification section 23 82 16.16.

3.4 Electrical Services

.1 Control power supply to terminal units to be provided in accordance with specification section 20 05 12 and 25 05 11.

.2 Power supply for electric reheat coils to be provided under Division 26.

3.5 Leakage Testing

.1 Terminal units are not required to be pressure tested as part of a duct system except as follows.

.2 When requested by the Consultant, perform a site pressure test on two terminal units selected by the Consultant and in accordance with the following procedure:

.1 test the sample terminal units without ductwork connected to them,

.2 temporarily cap the inlet and outlet duct connections and seal the caps to the greatest extent possible to minimize the effect of leakage of such temperature caps,

.3 pressure test the sample terminal units at 250 Pa (1 in.w.c.) to verify the specified maximum allowable leakage rate plus 15% for field testing uncertainty is not exceeded,

.4 where OEM supplied reheat coils and duct attenuators/silencers are supplied as parts of the terminal unit, the factory joints are to be included in the test without field modification.

.3 Where terminal unit leakage exceeds the specified maximum allowable leakage, seal the reheat coil and duct attenuator/silencer factory joints with duct sealant and retest the terminal unit.

.1 If the retested terminal unit air leakage is less than the specified maximum allowable leakage, then seal all such joints on all terminal units.

.2 If the retested terminal unit air leakage is greater than the specified maximum allowable leakage, then engage the manufacturer service representative to review the cause of the excessive air leakage.

.4 Where installed terminal units are included in a larger duct system pressure test, the acceptable leakage rate as determined by the field test may be used and deducted from the duct system leakage rates. Where the duct system is pressure tested at a test pressure other than 250 Pa (1 in.w.c.), the terminal unit allowable air leakage may be adjusted as follows:

$$Q_D = Q_{250}\, x \sqrt{\frac{P_D}{P_{250}}}$$

Where:

Q_{250} Leakage airflow measured at a test pressure of 250 Pa, in L/s

Q_D Allowable leakage at duct system pressure test P_D, in L/s

P_{250} Terminal unit pressure test of 250 Pa

P_D Duct system pressure test, Pa

END OF SECTION

GRILLES, REGISTERS AND DIFFUSERS
23 37 13

1 GENERAL

1.1 Scope

.1 Provide grilles, registers, and diffusers as shown.

1.2 Applicable Codes and Standards

.1 Product standards:

.1	ASHRAE 70	Method of Testing the Performance of Air Outlets and Air Inlets
.2	ASTM D610	Standard Practice for Evaluating Degree of Rusting on Painted Steel Surfaces
.3	ASTM D714	Test Method for Evaluating Degree of Blistering of Paints
.4	ASTM D1308	Standard Test Method for Effect of Household Chemicals on Clear and Pigmented Organic Finishes
.5	ASTM D1654	Standard Test Method for Evaluation of Painted or Coated Specimens Subjected to Corrosive Environments
.6	ASTM D4752	Standard Practice for Measuring MEK Resistance of Ethyl Silicate (Inorganic) Zinc-Rich Primers by Solvent Rub

1.3 Submittals

.1 Submit manufacturer's data sheets with product data including:

.1 equipment model numbers, configuration, dimensions, support requirements, general assembly and materials,

.2 catalog performance ratings that indicate air flow, static pressure, throw distance at air velocity, and noise criteria (NC) data.

1.4 Samples

.1 Submit examples of each type and style of register, diffuser and grille with sample finishes when requested by Consultant or the Owner.

2 PRODUCTS

2.1 General Requirements

.1 Grilles, registers and diffusers:

.1 product of one manufacturer where same model or type identification is used,

.2 performance data determined in accordance with ASHRAE 70,

.3 standard catalogue products selected to meet capacity, throw, and noise level,

.4 frames with full perimeter gaskets, plaster stops where set into plaster or gypsum board, and concealed fasteners.

.2 Type designations:

.1 floor plans indicate a diffuser, register or grille type that is referenced on equipment schedules; this unit type includes model numbers taken from listed manufacturer catalogues and which represents the basis-of- design selection.

.2 the listed manufacturer model (basis-of-design) reference establishes the esthetic (visual) appearance of the equipment and other quality requirements not otherwise specified herein. Products from other manufacturers listed herein may be used where they meet these aesthetic requirements as determined by Consultant.

.3 Painted finishes:

.1 baked-on powder coat finish, minimum build thickness of 0.05 mm (2.0 mils), with a finished hardness of 2H.

.2 paint finishes to demonstrate no degradation when tested in accordance with ASTM D1308 and ASTM D4752,

.3 paint finish to withstand a minimum salt-spray exposure of 500 hours with no measurable creep in accordance with ASTM D1654, and 1000 hours of exposure with no rusting or blistering when tested in accordance with ASTM D610 and ASTM D714.

.4 finish colour: as shown or as selected by Consultant.

.4 Manufacturers:

Standard of Acceptance

- Carnes
- Hart & Cooley
- MetalAire
- Nailor
- Price Industries
- Titus

2.2 Square Plaque Diffuser (ref. "SPD")

.1 Application: supply air.

.2 Style: square plaque-type with single outlet opening;

.1 backpan: one piece die-formed construction with smooth aerodynamically designed surfaces and no corner joints, with integral inlet collar,

.2 plaque face panel: removable plate, protruding not more than 6 mm (1/4 in.) below the ceiling plane, with smooth edges and rounded corners,

.3 designed to provide a 360° radial direction horizontal airflow pattern, for VAV operation.

.4 beaded extended neck, minimum depth of 65 mm (2-1/2 in.),

.5 suitable for lay-in to T-bar with drop frame,

.3 Frame: none.

.4 Material: steel

.5 Damper: steel radial opposed blade

.6 Specials: all aluminium construction for magnetic resonance imaging (MRI) rooms.

2.3 Plenum Slot Diffusers (ref. "PSD")

.1 Application: supply air.

.2 Style: linear diffuser with integral plenum for installation in a T-bar ceiling or drywall ceiling;

.1 side-inlet with circular duct connection,

.2 1, 2, 3 or 4 linear slots with intermediate aluminium Tee, number of slots as shown,

.3 slot width as shown,

.4 center notch where diffusers span across a cross Tee,

.5 suitable for lay-in to T-bar or into a drywall ceiling plaster frame.

.3 Frame: none.

.4 Material: painted steel.

.5 Pattern controller: [pincer][curved][blade][as shown].

.6 Damper: none.

.7 Insulation: diffuser externally insulated with 12 mm (1/2 in.) foil-backed fibreglass insulation.

.8 Specials: aluminium plaster frame for dry-wall ceiling installation.

2.4 Louvred Grille (type "LG")

.1 Application: supply, return and exhaust air.

.2 Style: rectangular louvred with frame;

.1 fixed single-deflection louvres,

.2 louvres and frame materials: steelunless otherwise shown.

.3 blade spacing: 13 mm (1/2 in.) unless otherwise shown,

.4 deflection: 45°,

.5 blade orientation: horizontal for vertical grilles, parallel to the long dimension for horizontal grilles,

.6 border: nominal 32 mm (1-1/4 in.) flat face for surface mount, unless otherwise shown,

.3 Frame: none

.4 Fasteners: countersunk holes

.5 Finish: painted, standard white unless show except dampers are to be painted black,

.6 Damper: opposed blade damper with manual operator.

.7 Specials: as shown.

2.5 Adjustable Louvred Grille (type "LG-A")

.1 Application: supply air only.

.2 Style: rectangular louvred with frame;

.1 adjustable double-deflection louvres, horizontal in rear position, vertical in front position,

.2 louvres and frame materials: [steel]][aluminum] unless otherwise shown.

.3 blade spacing: 13 mm (1/2 in.) unless otherwise shown,

.4 blade orientation: horizontal for vertical grilles, parallel to the long dimension for horizontal grilles,

.5 border: nominal 32 mm (1-1/4 in.) flat face for surface mount, unless otherwise shown,

.3 Frame: none,

.4 Fasteners:[countersunk holes

.5 Finish: painted, standard white unless show except dampers are to be painted black,

.6 Damper: opposed blade damper with manual operator.

.7 Specials: as shown.

2.6 Eggcrate Grilles (type "ECG")

.1 Application: return and exhaust air.

.2 Style: square-grid bladed grille;

.1 louvres and frame materials: aluminium,

.2 blade spacing: 25 mm x 25 mm square by 25 mm deep (1 in. x 1 in. x 1 in.),

.3 deflection: 0°.

.4 blade orientation: not applicable,

.5 border:

(a) lay-in tile ceilings: none

(b) gypsum board ceilings: nominal 32 mm (1-1/4 in.) flat face, suitable for ducted connections.

.3 Frame: none.

.4 Fasteners: countersunk holes

.5 Finish: painted, standard white unless otherwise shown,

.6 Damper:

.1 ceiling plenum return: none

.2 ducted return: opposed blade damper with manual operator.

.7 Specials: as shown.

3 EXECUTION

3.1 Layout

.1 Drawings showing position of air distribution outlets are essentially diagrammatic. Coordinate exact location of diffusers with other elements in ceiling and shown on Architect's reflected ceiling drawings and select trim to suit ceiling materials listed in the Architectural drawings room finish schedules.

3.2 Installation of Grilles and Diffusers

.1 For duct-mounted grilles installed in ceiling or walls constructed of gypsum board, coordinate and arrange with general trades to provide channel framing around ceiling/wall opening to provide backing-blocking for attachment of the grille or diffuser.

.2 Install grilles and diffusers with oval head cadmium plated screws in countersunk holes where fastenings are visible. Use colour-matching screws.

.3 Install diffusers with concealed fastenings.

.4 Provide round, square and rectangular diffusers with equalizing deflectors, mounted in the connecting duct neck, accessible from diffuser face, with blades oriented at right angles to direction from which air is flowing.

.5 Except for last diffuser on branch, where diffusers are installed directly underneath a supply duct provide an extract volume control damper at the duct diffuser-branch connection.

.6 Where a supply air diffuser includes an air pattern controller, provide labour and services to adjust the pattern controller in conjunction with the TAB contractor during system balancing.

3.3 Special installations

.1 Grilles, registers and diffusers penetrating fire walls and fire partitions, to have steel sleeves secured to structure in accordance with NFPA 90A-1985.

.2 In gymnasium provide safety chain on each diffuser face and core and bolt diffuser in place.

.3 For grilles and diffusers exceeding 5 kg (12 lbs) weight, mechanically fasten grille/diffuser to ceiling or wall structure, independent of ductwork connection or support.

END OF SECTION

Master revised: December 16, 2022

BUILDING AUTOMATION COMMON WORK RESULTS
25 05 01

1 GENERAL

1.1 Scope

.1 Provide a building automation system (“BAS”) for control and supervisory management of facility mechanical and electrical equipment systems.

.2 The BAS is to be a direct digital control (“DDC”) system with digital/electric instrumentation and electric operation.

.3 The BAS is to integrate with:

.1 other building services subsystems including lighting control systems, access control systems and fire alarm systems,

.2 facility equipment other than equipment and systems under Divisions 20 to 28.

1.2 Dependent Sections

.1 The BAS Work is further defined in the following specification sections:

25 05 02	Building Automation Alternate and Separate Prices
25 05 06	Work on Existing Building Automation
25 05 11	Building Automation Control Panels and Wiring
25 11 00	Building Automation Network Devices
25 12 00	Building Automation Network Gateways
25 13 13	Building Automation Network Supervisory Controllers
25 14 16	Building Automation Application Specific Controllers
25 14 17	Building Automation Terminal Unit Controllers
25 15 13	Building Automation Software for System Management
25 15 16	Building Automation Software for Control and Monitoring
25 30 13	Building Automation Actuators and Operators
25 30 16.13	Building Automation Instrumentation
25 30 16.16	Building Automation Room Pressure Monitoring
25 30 16.23	Building Automation Flow and Energy Meters
25 30 16.26	Building Automation Revenue Meters
25 30 19.13	Building Automation Control Valves
25 30 19.16	Building Automation PICV and Energy Valves
25 30 23.13	Building Automation Control Dampers
25 30 23.16	Building Automation Venturi Valves
25 55 13	Building Automation Smoke Damper Control Panels
25 90 01	Building Automation Control Sequences

1.3 Related Sections

.1 Without limiting the scope of work or applicability of other specification sections, the BAS system is further described in the following the work under this section directly integrates with or refers to the following specification sections:

.1 20 05 12 Common Electrical Requirements for Mechanical Services

.2 20 08 11 Testing of Mechanical Life Safety and Fire Protection Requirements

.3 23 36 13 Terminal Units

1.4 Equipment Supplied for Installation under Other Sections

.1 Supply the following equipment for installation under other Sections of Division 20;

.1 automatic control valves and pressure independent control valves,

.2 instrumentation including pressure sensors, flow meters and energy meters to be installed in piping systems,

.3 temperature wells for controllers and sensors provided under this Section, for installation in piping systems,

.4 instrumentation including air flow stations to be installed in ductwork systems,

.5 motorized dampers, except:

(a) where provided as part of factory built air handling units,

(b) motorized fire dampers, smoke dampers and/or combination fire/smoke dampers,

1.5 Factory Installation of Controls for Terminal Units

.1 Supply control equipment for terminal units (as specified in section 23 36 13) free-issue to the place of the manufacturer of the terminal unit equipment, for factory installation of the control equipment by that manufacturer, including factory wiring and tubing installation. Such control equipment includes:

.1 TU-ASC controller,

.2 Provide information on sizing requirements for electrical transformer or power supply, sized for all control loads including controller, damper actuator, and for control of any associated heating valves.

.3 Coordinate with terminal unit manufacturer for delivery of controls material to suit their production schedule.

.4 All costs associated with such method of factory installation is to be borne by the mechanical subcontractor and controls subcontractor as determined between them; the Owner shall not be responsible for any such costs.

1.6 Equipment Provided under Other Divisions

.1 The following equipment is provided under other Sections of Division 20;

.1 steam humidifiers with automatic control valves,

.2 unit heater and cabinet unit heater line voltage thermostats,

.3 manual dampers, non-motorized fire dampers, and gravity dampers,

.4 motorized fire dampers, smoke dampers and combination smoke/fire dampers, including damper actuators,

1.7 Definitions and Abbreviations

.1 The following definitions, abbreviations, and acronyms apply to this Division of the Work:

.1 AI Analog Input: continuously variable value, usually a sensor, referenced to a controller

.2 AO Analog Output: continuously variable value, usually a control signal to an actuator device, referenced to a controller.

.3 ASC Application Specific Controller

.4 DI Digital Input: a two-state (On-Off) value, usually associated with a switch or state, referenced to a controller.

.5 DO Digital Output: a two-state (On-Off) value, usually associated with starting or stopping equipment or generating an alarm, referenced to a controller.

.6 FC Fail Close (valve or damper action on failure of the controller)

.7 FO Fail Open (valve or damper action on failure of the controller)

.8 FAS Fire Alarm System

.9 GUI Graphic User Interface: an LED, LCD or monitor display

.10 I/O Input/Output

.11 LAN Local Area Network

.12 NC Normally Closed: position of device in a de-energized state.

.13 NO Normally Open: position of device in a de-energized state.

.14 NSC Network Supervisory Controller

.15 OEM Original Equipment Manufacturer

.16 OWS Operator workstation: a PC based server or computer

.17 Tier 1 Building level network providing communication between NSCs and workstations.

.18 Tier 2 Field level network providing communications between ASCs and NSCs

.19 WAN Wide Area Network

1.8 Applicable Codes and Standards

.1 Product standards:

.1 ANSI/ASHRAE 135 BACnet – A Data Communication Protocol for Building Automation and Control Networks

.2 ANSI/CEA 709.1 Control Network Protocol Specification (Lonworks)

.2 Interfacing Standard:

.1 Input/output devices to use ASCII (American Standard for Communication and Information Interchange) code and standard EI (Electronic Industry Association) interfaces.

(a) CSA T530 Commercial Building Standard for Telecommunications Pathways and Spaces

(b) IEEE 802.3 Ethernet

1.9 Qualified Tradesperson

.1 Work to be performed by qualified, licensed tradesperson from Siemens. Base-building controls contractor to be engaged from start of construction including demolition.

.2 Base-building controls representative:

Jake Rendullic

E: Jake.Rendulic@siemens.com

T: 905-541-7433

1.10 Design Services

.1 Provide engineering services for the design of the BAS including product selection, wiring details, and all installation details to meet the prescribed and performance requirements described in the specifications sections of Division 25. Issued design documents are to be sealed by a professional engineer licensed in the province of the Work.

.2 Prior to preparation of shop drawings for the BAS, provide a design assist to review Consultant's sequence of operation and provide feedback on any recommendation that may improve the installation or ease of operation, while remaining within the hardware scope as originally designed and specified herein.

1.11 Licences and Ownership

.1 Ownership of, and licences for, hardware and software supplied or used for this project or for ongoing system operation, maintenance and modification to be registered, without restrictions, in Owner's name.

.2 This is applicable to System Software, Workstation Application Editors, and Controller Software.

.3 Licensing to permit an unlimited number of users to access system without additional fees.

.4 At the time of substantial performance of the Work, upgrade the BAS software to the most current release version at that time, at no additional cost to the Owner.

.5 Project-developed software and resulting documentation to be treated as part of system and subject to these same requirements for ownership and licensing. This material includes;

.1 project graphic images,

.2 CAD generated record drawings,

.3 project database,

.4 project-specific application programming code and documentation.

1.12 Submittals

.1 Submit one (1) completely engineered and coordinated shop drawing package. Partial or incomplete submission of data and/or drawings will be returned without review.

.2 Submit shop drawings for designed elements;

.1 list of materials of equipment to be used indicating manufacturer, model number, and other relevant technical data,

.2 BAS riser diagram showing system controllers, operator workstations, network devices, and network wiring,

.3 control panel internal wiring diagrams, .

.4 single-line schematics and system flow diagrams showing location of control devices,

.5 wiring diagrams identifying interface hard-wire terminations to controlled equipment OEM control panels,

.6 points list for each system controller, including: Point Type, System Name, Object Name, Expanded ID, Display Units, Controller Type, Address, Cable Destination, Panel, Reference Drawing, and Cable Number,

(a) points to be named by function, and list to include software points such as programmable set-points, range limits, time delays, and so forth,

.7 detailed analysis of each Sequence of Operation from Consultant's design documents, ready for development of actual programming code,

.8 written Sequence of Operations to cover normal operation and operation under various alarm conditions applicable to that system.

.3 Submit shop drawing schedules for;

.1 control dampers: spreadsheet type, to include separate line for each damper and columns for damper attributes.

.2 control valve: spreadsheet type, to include separate line for each valve and separate columns for valve attributes.

.4 Submit catalogue cut-sheets for;

.1 manufacturer's description and technical data, such as performance curves, product specification sheets, and installation/maintenance instructions for equipment and hardware items as follows;

(a) controllers (NSC's and ASC's),

(b) instrumentation, including

i) accuracy data, range and scale information,

ii) one sheet for each device marked with applicable options. Where several devices of same type are to be used, submit one sheet for each device, individually marked.

(c) actuators,

(d) valves and dampers,

(e) relays/switches,

(f) control panel enclosures,

(g) power supplies,

(h) batteries,

(i) GUI operator interfaces,

(j) wiring and wiring accessories.

.5 Submit supporting documentation:

.1 representative examples of graphics for GUI to include;

(a) BAS network schematics,

(b) typical terminal unit floor plan graphic that shows conditions on occupied floor,

(c) typical equipment room floor plan graphic,

(d) typical graphics for each system and terminal unit at least one sample graphic for each type of equipment,

(e) one sample graphic for chilled water system,

(f) one sample graphic for hot water system,

(g) description of techniques used for dynamic display of information on graphics and method of how building operator drills down to secondary information and affects control of equipment.

.2 Protocol Implementation Conformance (PIC) statement for BACnet devices,

.3 where interfaces occur with control or wiring diagrams of other sections, obtain reproducible copies of those diagrams and revise to show terminal numbers at interface and include diagrams as part of interconnection schematic shop drawings.

1.13 Quality Control

.1 Continuity of staff and subcontractors:

.1 Controls contractor's project manager is to be nominated at time of shop drawing submission and is to remain involved with the project, from shop drawing preparation through to project acceptance, unless a request for change of personnel is submitted to and approved by Owner.

.2 Subcontractors listed in preliminary design submission are to execute the Work defined as sublet in preliminary design document, unless request for change is submitted to and approved by Owner.

.3 Requests for changes in staff, subcontractors, or extent of work subcontracted are to be submitted for approval by Owner and such approval is not to be unreasonably withheld.

.2 Identification of non-conforming materials and equipment:

.1 Submit documentation at time of bid, identifying nature and extent of non-conformance and variances from specifications or referenced standards.

.2 Failure to submit this documentation at time of bid will be interpreted as confirmation that materials, workmanship, hardware and software will be in strict accordance with specifications and standards.

.3 All products that are connected to a piping system that is subject to registration under applicable boiler and pressure vessel legislation are to have current Canadian Registration Numbers in accordance with CSA B51.

.4 Site Acceptance Testing

.1 Manufacturer to provide services of manufacturer's authorized service personnel in accordance with the requirements of Part 3 of this specification.

1.14 Warranty

.1 At completion of Work, submit written guarantee undertaking to remedy defects in work for period of two (2) years from date of acceptance, which includes:

.1 rectification of control system failures attributable to defects in workmanship, materials, hardware, and software,

.2 service technician to arrive on site within 24 hours of warranty service request, to install and de-bug software patches, to replace defective parts, materials or equipment, and to provide incidental supplies, and labour for remedial work,

.3 technician to remain in attendance until system is returned to operating condition.

.2 Submit similar guarantee for any part of the Work accepted by Owner, before completion of whole work.

2 PRODUCTS

2.1 General

.1 Provide equipment which functions and meets detailed performance criteria when operating in following minimum ambient condition ranges unless otherwise specified in other specification sections of Division 25:

.1 temperature: 0°C to 40°C (32°F to 104°F)

.2 relative humidity 10% to 90% non-condensing

.3 electrical power service of single phase, 120 VAC +/- 10%, 60 Hz nominal.

.2 Components installed within motor control devices to be designed to operate with transient electrical fields occurring within these devices.

2.2 Equipment Standard

.1 Products and software: manufacturer/developer/supplier's catalogued current stock.

.2 This installation is not to be used as test site for newly developed product or software, without explicit written approval by Owner.

.3 Equipment and systems installed to meet;

.1 performance specifications when subjected to VHF, UHF, FM, AM or background RFI as generated by commercial or private, portable or fixed transmitters that meet regulatory codes,

.2 Federal Communication Commission (FCC) Rules and Regulations, Part 15, Subpart J for computing devices.

2.3 BAS General Functional Requirements

.1 Control mechanical and electrical equipment as specified in control sequences, shown on control schematics, [][detailed in Points Lists,] and described in equipment schedules.

.2 Scalable system architecture to be modular, permitting stepped expansion of application software, system peripherals, and field hardware.

.3 Control system:

.1 high-speed, peer-to-peer network of microprocessor based Direct Digital Control (DDC) controllers with web-based operator interface,

.2 each mechanical system, building floor plan, and control device to be displayed through point-and-click graphics,

.3 Web server with network interface card to gather data from this system and generate web pages that can be accessed through conventional web browser on any PC connected to network,

.4 operators to access this system through web browser on connected PC's, wireless tablet PCs and smart phones to perform normal operator functions,

.5 scalable, modular, automatic process and optimized workflows, with automatic data acquisition and energy performance analytics,

.4 Each controller;

.1 operates with local closed loop programming, independent from server, able to continue functional control if peer-to-peer communication is interrupted;

.2 performs resident control routines;

(a) receiving information from field mounted sensors and switches and

(b) transmitting instructions to actuators to perform control sequences.

.3 manages local hardware and software alarms;

(a) to collect historical data,

(b) to facilitate operator input and output,

(c) to communicate with Central BAS web server and GUI.

.5 Central BAS Web server;

.1 performs global application programs and data consolidation;

(a) communicating with controllers,

(b) obtaining data from field devices for central monitoring of building systems, and

(c) transmitting instructions to controllers.

.2 has software routines for;

(a) BAS Server operation,

(b) database creation and data storage,
(c) web based GUI with graphics generation and display,
(d) report formulation, printing, and presentation,
(e) alarm detection, management and reporting,
(f) event initiated programming.

2.4 Network Integration Functional Requirements

.1 Open protocol:

.1 Provide an integrated, open protocol building automation system using BACnet to ANSI/ASHRAE Standard 135, with native integration with:

(a) Lonworks,
(b) Modbus,
(c) OPC (OLE for process control).
(d) ONVIF,
(e) DALI.

.2 Integral systems integration functionality:

.1 provide hardware and software to allow bi-directional digital communications between BAS and facility control subsystems including:

(a) HVAC,
(b) fire safety including fire alarm systems,
(c) security systems,
(d) power control and monitoring systems,
(e) lighting control systems,
(f) 3rd party integration with other facility systems.

.3 OEM Controller integration:

.1 provide hardware and software to allow bi-directional digital communications between BAS and 3rd party manufacturers' equipment control panels including but not limited to;

(a) boilers,
(b) chillers,
(c) variable frequency drives,
(d) packaged HVAC equipment,
(e) power monitoring equipment,
(f) medical gas equipment.

.2 integrate real-time data from these systems.

2.5 BMS Network Architecture

.1 Refer to specification section 25 05 06 for work required on existing BAS networks.

2.6 Performance

.1 General:

.1 information transmission and display times are based upon network connections,

.2 test systems using manufacturer's recommended hardware and software for operator interface.

.2 Performance criteria:

.1 Graphic Display;

(a) display graphic with 50 dynamic points with current data within 10 seconds.

.2 Graphic Refresh;

(a) update graphic with 50 dynamic points with current data within 10 seconds and

(b) automatically refresh every 15 seconds.

.3 Configuration and Tuning Screens;

(a) special screens used for configuring, calibrating, or tuning points, PID loops, and similar control logic to refresh every 5 seconds.

.4 Object Command response;

(a) time between command of binary object at GUI and onset of reaction by device to be less than 5 seconds,

(b) time between command of analog object at GUI and start of adjustment to be less than 5 seconds.

.5 Alarm Response Time;

(a) time between when an object goes into alarm and when it is annunciated at GUI to be less than 15 seconds.

.6 Program Execution Frequency;

(a) execution repeat frequency to be selected in manner consistent with process under control,

(b) custom and standard applications to be capable of executing as often as once every 5 seconds.

(c) programmable controllers to be able to perform PID control loop routines at selectable frequency, adjustable at GUI down to once every second.

(d) workstations connected to network to receive alarms with not more than 5 seconds spread between first and last annunciation.

2.7 Capacity for Future Expansion

.1 Tier 1 network;

.1 network backbone to have capacity for future 50 routers or building controller/routers in addition to connected devices at time of acceptance of the Work,

.2 each router or building controller/router on network backbone to have routing capacity for 50 controllers.

2.8 Wiring and Conduit

.1 Wire and conduit for power wiring, control wiring, and communication wiring to conform to specification section 20 05 12.

3 EXECUTION

3.1 Examination

.1 Inspect site and thoroughly examine documents to establish locations for control devices and equipment and report discrepancies, conflicts, or omissions for resolution before starting rough-in work.

.2 Be responsible for correction of defects caused through neglect of inspections and examinations or failure to report and resolve discrepancies.

3.2 Protection

.1 Protect work and material against damage during construction and be responsible for work and equipment until inspected, tested, and accepted.

.2 Protect material not immediately installed and seal connector terminations with temporary covers or plugs during storage and construction to prevent entry of foreign objects.

.3 Protect electronic equipment from elements during construction.

3.3 Coordination

.1 Coordinate and schedule BAS work with other work in same area to ensure orderly progress.

.2 Testing and balancing:

.1 Supply sets of tools of sufficient quantity for Testing and Balancing Technicians to interface to control system, train these technicians in use of tools, and provide qualified Control Technician to assist with testing and balancing the first 10 terminal units.

.2 Tools to be turned over to Owners on completion of testing and balancing.

.3 Controls work by others:

.1 Integrate and coordinate this control work with controls and control devices provided or installed by others.

.2 Each supplier of control product to configure, program, start up, and test that product to satisfy requirements of Sequence of Operation regardless of where within contract documents product is specified or described.

.3 Resolve compatibility issues between control products provided under this Division and those provided under other Divisions of the Work.

3.4 General Workmanship

.1 Installation to be performed by skilled and certified technicians.

.2 Install equipment, piping, and wiring or raceways horizontally, vertically, and parallel to building lines.

.3 Provide sufficient slack and flexibility in connections to allow for vibration isolation between conduit, raceways, piping and equipment.

.4 Install instrumentation and devices in locations providing adequate ambient conditions.

.5 Protect components placed in areas of potentially high humidity.

3.5 Wiring for Power, Control and Communications

.1 Provide wire and raceways (conduit) for power wiring, control wiring, and communications wiring for BAS controllers and associated instrumentation and actuation devices, at voltages of 120 V and under, in accordance with specification section 20 05 12 and, for greater clarity, Schedule A appended to that specification section.

.2 Verify wiring integrity to ensure continuity and freedom from shorts and ground faults.

3.6 Cleaning

.1 Clean up debris, remove packaging material, collect waste and place in designated location, on a daily basis.

.2 Keep work areas free from dust, dirt, and debris.

.3 On completion of work, check finish of equipment provided under this section for damage and repair damaged factory-finished paint, replace deformed cabinets and enclosures with new material, and repaint to match original.

.4 Prior to hand-over to the Owner, clean the inside of control panels;

.1 remove debris and vacuum clean internal components,

.2 the use of low-pressure dry nitrogen or inert compressed gases may be used to blow dust and debris out of panels where the use of such pressurized gases will not damage equipment or loosen wiring terminations,

.3 after cleaning, apply a label to the exterior side of the panel to identify the date the panel was cleaned and the initial of the person who cleaned the panel.

3.7 Field Quality Control

.1 Ensure work, materials, and equipment comply with this specification and reviewed shop drawings.

.2 Monitor field installation for applicable safety and building code compliance and workmanship quality.

.3 Arrange and pay for inspections by local or provincial authorities having jurisdiction over the work.

3.8 Identification of Equipment

.1 Manufacturers' nameplates and product certification labels to be visible and legible after equipment is installed.

.2 Identify discrete items of equipment with plastic nameplates or plasticized labels, identifying equipment and function. Identification plates are in addition to manufacturers nameplates.

.3 Identification plates:

.1 provided for equipment identified with number designations in schedules and equipment shop drawings.

.2 marked with equipment type, number and service following wording and numbering used in contract documents and shop drawings,

.3 plastic laminated labels,

.4 white face and black background field,

.5 minimum size 75 mm x 40 mm x 3 mm (3 in x 1½ in x 1/8 in),

.6 engraved or printed with 6.5 mm (1/4 in) high lettering.

.7 securely attached to equipment with brass chains.

.4 Label wiring and cabling, including that within factory-fabricated panels, with control system address or termination number at each end within 50 mm (2 in) of termination.

.5 Label pneumatic tubing at each end within 50 mm (2 in) of termination with descriptive identifier.

.6 Permanently label or code each point of field terminal strips to show instrument or item served.

.7 Label each control component with permanent label. Label plug-in components so that label remains stationary during component replacement.

.8 Label room sensors related to terminal boxes or valves with nameplates. Place labels on back of sensors.

.9 Identify motor controllers that are remotely controlled by the BAS with self-adhesive labels, black letters on white background with a red border and electric shock warning icon, with wording as follows;



3.9 Checkout and Testing

.1 Provide schedule for start-up and testing.

.2 Calibrate and prepare for service equipment, instruments, controls, and accessories.

.3 Start-up testing to verify completion of control system before system demonstrations begin;

- .1 verify that control wiring is connected and free of shorts and ground faults. Verify that terminations are tight,
- .2 enable control systems and verify input device calibration,
- .3 verify that binary output devices operate and that normal positions are correct,
- .4 verify failure positions of dampers and control valves are correct when power/compressed air is deenergized to the device,
- .5 verify that analog output devices are functional, that start and span are correct, and that direction and normal positions are correct,
- .6 check control valves and automatic dampers for proper action and closure and adjust valve stroke/rotation and damper blade travel,
- .7 verify that damper and control valve feedback signals are correct when device is stroked fully open and closed (two position) and at any opening position between zero and fully open (modulating devices),
- .8 verify that system operates according to Sequences of Operation. Simulate changes in variables by overriding and varying inputs and schedules and observe and record each operational mode response.,
- .9 tune PID loops and control routines to provide stabile operation and to minimize valve and damper hunting,
- .10 check each alarm with an appropriate signal at value that will trip alarm,
- .11 trip interlocks using field contacts to check logic and to ensure that actuators fail in proper direction,
- .12 test interlock actions by simulating alarm conditions to check initiating value of variable and interlock action.

.4 Prepare and submit test log documenting start-up testing of each input and output device and each control routine, with technician's initials certifying each device and each routine is functioning correctly and sensors have been calibrated. Include list of deficiencies and a workplan schedule setting out rectification program with time lines.

3.10 Testing of Integrated Life Safety and Fire Protection Systems

.1 Comply with the requirements of specification section 20 08 11 for the testing of the integration of controls and communications between the BAS and life safety and fire protection systems.

3.11 Control System Demonstration

.1 Obtain approval of start-up testing log and rectification program before scheduling demonstrations.

.2 Provide notification to Owner and Consultant not less than 10 business days before system demonstration begins.

.3 Demonstration to follow previously submitted and approved procedures;

.1 submit checklists and report forms for each system as part of demonstration,

.2 lists and forms to have initials of technicians conducting demonstrations,

.3 date of each demonstration and signatures of Owner's representatives witnessing each demonstration section.

.4 Prior to acceptance, perform the following operating tests in the presence of the Owner or Owner's representative and Consultant to demonstrate system operation and compliance with specification after and in addition to tests specified above in article Checkout and Testing.

.5 Demonstrate field operation of;

.1 each Sequence of Operation,

.2 Operator Interface,

.3 control loop response with graphical trend data output showing;

(a) each control loop response to set point change producing an actuator position change of at least 25% of full range.

(b) trend sampling rate to be from 10 seconds to 3 minutes, depending on loop speed,

(c) loop trend data to show set point, actuator position, and controlled variable values,

(d) documentation of further tuning of any loop that displays significantly under- or over-damped control

.4 demand limiting routine with trend data output showing demand-limiting algorithm action;

(a) trend data to document action sampled each minute over at least 30-minute period and to show building kW, demand-limiting set point, and status of set-points and other affected equipment parameters.

.5 control integration with life safety and fire protection systems,

.6 trend logs for system points as selected by the Owner with;

(a) trend data to indicate set-points, operating points, valve positions, and other data as specified in points list provided with each Sequence of Operation,

(b) each log to cover three 48-hour periods and to have sample frequency not less than 10 minutes, except where a Control Sequence specifies other time intervals,

(c) show that trend logs are accessible through operator interface and can be retrieved for use in other software programs.

.7 substantiate calibration and response of any input and output points requested,

.8 provide at least two technicians equipped with two-way communication,

.9 provide and operate test equipment to establish calibration and prove system operation.

.6 Tests that fail to demonstrate system operation are to be repeated after repairs and/or revisions to hardware or software is completed.

3.12 Training

.1 Materials:

.1 provide course outline and materials for each class at least four (4) weeks before first class,

.2 provide training through instructor-led sessions, with computer-based, or web-based techniques,

.3 instructors to be factory-trained and experienced in presenting this material,

.4 perform classroom training using network of working controllers representative of installed hardware.

.2 Operating staff training:

.1 provide training for Owners operating staff using abovementioned training materials in self-paced mode, web-based or computer-based mode, classroom mode, or combination of these methods,

.2 allow for [1][2][3] repeat sessions for each category to cover operator shift rotation.

.3 Training to enable students to accomplish following objectives:

.1 Group 1:

(a) proficiently operate system,

(b) understand control system architecture and configuration,

(c) understand BAS system components,

(d) understand system operation, including BAS system control and optimizing routines (algorithms),

(e) understand Sequence of Operations,

(f) operate workstation and peripherals,

(g) log on and off system,

(h) access graphics, point reports, and logs,

(i) adjust and change system set-points, time schedules, and holiday schedules,

(j) recognize common HVAC system malfunctions by observing system graphics, trend graphs, and other system tools,

(k) understand system drawings and Operation and Maintenance manual,

(l) understand project layout and location of control components,

(m) access data from BAS controllers,

(n) set-up trend logs,

(o) operate portable operator's terminals

.2 Group 2:

(a) create and change system graphics,

(b) create, delete, and modify alarms, including configuring alarm reactions,

(c) create, delete, and modify point trend logs (graphs) and multi-point trend graphs,

(d) configure and run reports,

(e) add, remove, and modify system's physical points,

(f) create, modify, and delete application programming,

(g) add and configure GUIs,

(h) add new controller to system,

(i) download firmware and advanced applications programming to controller,

(j) configure and calibrate I/O points.

.3 Group 3:

(a) maintain software and prepare backups,

(b) interface with job-specific, third-party operator software,

(c) add new users and understand password security procedures.

.4 Divide presentation of objectives into three sessions:

.1 Group 1: Day-to-day Operators,

.2 Group 2: Advanced Operators,

.3 Group 3: System Managers and Administrator,

.4 participants will attend one or more sessions, depending on knowledge and expertise level required,

.5 provide each student with one copy of training material.

3.13 Record Submittals

.1 Submit record documents to the Owner.

.2 Document language: [English][French][English and French],

.3 Submit three copies of project record documents and obtain approval during acceptance procedures.

.4 Submit AHJ inspection certificates.

.5 Provide as-built drawings;

.1 as-built interconnection wiring diagrams, or wire lists of field installed system with identified, ordering number of each system component and service,

.2 floor plans with accurate depiction of location of system devices, controllers, and trunk wiring. Drawings to be constructed using Architectural backgrounds provided,

.3 provide copies of as-built drawings on two (2) removable storage devices,

.4 provide five (5) full size hard copies of floor plan drawings.

.6 Operation and Maintenance (O&M) Manuals:

.1 provide two (2) paper copies of material and copies on five (5) removable storage devices in portable document format.

.2 describe operation, maintenance and servicing requirements of system and associated equipment,

.3 provide the following information in separate sections, each with an index:

(a) Service and parts;

i) names, addresses, and telephone numbers of installing contractors and service representatives for equipment and control systems,

ii) list of recommended spare parts with part numbers and suppliers.

(b) System description;

i) outline of BAS system and system architecture,

ii) as-built versions of shop drawing product data,

iii) reduced size (11 in x 17 in) copies of record drawings,

iv) graphic files, programs, and database on magnetic or optical media,

v) licenses, guarantees, and warranty documents for equipment and systems.

(c) Technical literature for equipment, including;

i) catalogue sheets,

ii) calibration, adjustments and operation instructions,

iii) installation instructions,

iv) hardware and software manuals, with information supplied by original product developer, on application programs and on computers and controllers supplied,

v) Operator's manual with procedures for operating control systems; logging on and off, handling alarms, producing point reports, trending data, overriding computer control, and changing set-points and variables,

vi) engineering, installation, and maintenance manual or set of manuals that explains how to design and install new points, panels, and other hardware; how to perform preventive maintenance and calibration; how to debug hardware problems; and how to repair or replace hardware,

vii) original-issue documentation with installation and maintenance information for third-party hardware including computer equipment and sensors,

viii) recommended preventive maintenance procedures for system components, including schedule of tasks such as inspection, cleaning, and calibration; time between tasks; and task descriptions,

ix) programming manual or set of manuals with description of programming language and syntax, explanation of statements for algorithms and calculations used, procedures for point database creation and modification, documentation of techniques for program creation and modification, and instructions for use of editor,

x) documentation of programs created using custom programming language including set-points, tuning parameters, and object database. Electronic copies of programs to modify and create control logic, set-points, tuning parameters, and objects that can be viewed using programming tools.

.7 Original Software:

.1 Furnish one original set of application and system software on original media. Disks to bear manufacturer's label. Field copies are not acceptable.

.2 Original-issue copies of software to include operating systems, custom programming language, application generation, graphic support, maintenance support, operator workstation or web server software, and other utilities provided in support of installed system. [

.8 On-line record documentation:

.1 After completion of testing and adjustment, install the following additional information on the server OWS.

(a) as-built record drawing files,

(b) detailed catalog data on all installed system components, with supplier contact information for purchasing and factory authorized repair service.][]

3.14 Acceptance

.1 Application for substantial performance of the Work requires as a prerequisite the completion of the BAS including testing, demonstration, and submittal of required documentation, except where the Owner agrees to differ any work to a later date.

.2 In support of an application for substantial performance, submit a signed declaration to the Owner certifying that:

.1 the BAS is complete and operating in accordance with the contract documents,

.2 control system checkout and testing is completed,

.3 control system demonstration is completed,

.4 training is completed,

.5 as-built documentation is completed and turned-over to the owner.

.3 Certification document may identify tests that cannot be performed due to extenuating circumstances such as weather conditions, where previously agreed to be deferred to a later date by the Owner.

Append a program for completion of deferred work to the certification document for rectification and completing these tests during warranty period.

3.15 Correction After Completion

.1 After start-up, testing, and commissioning phase has been completed and satisfactory and reliable operation of equipment and systems has been demonstrated, acceptance of the system is to be given by Owner. Warranty period to begin on date established on certificate of acceptance.

.2 Provide updates and patches to resolve software deficiencies in operator workstation or web server software, project-specific software, graphic software, database software, and firmware during warranty period.

.3 Provide upgrades that improve routines and procedures of operator workstation software, web server software, project-specific software, graphic software, or database software, free of charge, during warranty period.

.4 Provide details of proposed changes and obtain written authorization from Owner before installation of updates, patches, or upgrades.

.5 Include preventative maintenance, with allowance for spare parts, labour, and emergency (24 hour) service for system and equipment during warranty period.

.6 Equipment manufacturers to submit written undertakings to make circuit board repairs and provide spare parts, software support and patches, and technical assistance for at least five years after acceptance is certified.

End of Section

Master revised: April 6, 2022

WORK ON EXISTING BUILDING AUTOMATION
25 05 06

1 GENERAL

1.1 Scope

.1 Modifications to existing building control systems including:

.1 connection to of new BAS networks to the existing building BAS networks,

.2 connection of new control devices to existing BAS networks,

.3 selective demolition of existing building controls,

.4 modifications and upgrades of existing BAS.

1.2 Related Sections

.1 Without limiting the scope of work or applicability of other specification sections, the work under this section directly integrates with or refers to the following specification sections:

.1 20 05 26 Pipeline Hot-Tapping and Line Stopping

.2 25 05 01 Building Automation Common Work Results

1.3 Definitions and Abbreviations

.1 Refer to specification section 25 05 01.

1.4 Designated Controls Contractor

.1 BAS work shall be performed by Siemens as the base building controls contractor authourized by the Owner to perform such Work.

.2 Siemens Representative:

Jake Rendulic

E: jake.rendulic@siemens.com

T: 905-541-7433

1.5 Design Criteria

.1 Existing BAS networks:

.1 Tier 1: dedicated control vendor proprietary.

.2 Tier 1: hosted on facility IT network.

.3 Tier 2: control vendor proprietary.

1.6 Submittals

.1 Shop drawings:

.1 In addition to the requirements of section 25 05 01, submit the following information as a shop drawing:

(a) documentation of existing sequence of operations for applicable equipment and systems affected by the Work.

2 PRODUCTS

2.1 General

.1 Conform to specification section 25 05 01 and other sections of Division 01 except as specified herein.

2.2 Network Upgrades

.1 Replace existing Tier 1 networks with new networks in accordance with specification section 25 05 01 and referenced specification sections.

.2 Replace existing Tier 2 networks with new networks in accordance with specification section 25 05 01 and referenced specification sections.

2.3 Network Supervisory Controller Upgrades

.1 Replace the following NSC devices with new products in accordance with specification section 25 05 01 and reference specification sections.

.1 replace all NSCs

2.4 Application Specific Controller Upgrades

.1 Replace the following ASC devices with new products in accordance with specification section 25 05 01 and reference specification sections.

.1 replace all ASCs,

2.5 Data and Graphic Upgrades

.1 Upgrade existing data presentation and graphic displays on existing-to-remain NSC and ASC devices, by providing a new Web server with GUI graphics to comply with the requirements for new products in accordance with specification section 25 05 01 and reference specification sections.

.2 Develop new graphics to display existing data tables and/or graphical display of control systems, along with additional features as shown.

2.6 GUI Upgrades

.1 Replace existing GUI devices with new products in accordance with specification section 25 05 01 and reference specification sections. The existing devices and replacement types are to be in accordance with Schedule C at the end of this specification section.

3 EXECUTION

3.1 Existing Equipment

.1 Reuse of control components:

.1 reuse existing equipment and components as listed below where condition and conformance with this specification permits;

(a) valves and operators,

(b) dampers and operators,

(c) compressed air system,

(d) thermocouple wells,

(e) freezestats,

(f) firestats,

(g) limit, end, or level switches and air or liquid flow switches,

(h) static pressure sensors and controllers,

(i) wiring and conduit for safety controls and I/O points,

(j) relays,

(k) cabinets,

(l) other items specifically noted as existing, to be re-used.

.2 Remove and replace existing temperature and humidity sensors with new units, throughout the installation,

.3 Check and re-calibrate existing indicator gauges,

.1 under no circumstances are existing gauges or thermometers be removed.

.4 Re-calibrate valves and dampers as part of installation of this system.

.5 Existing thermowells for conventional control system may be reused for new sensors,

.1 repack temperature wells, both new and reused, with heat conductive grease.

3.2 Existing Programming and Configuration

.1 Document existing control device programming, configuration, and setpoint values at the start of the work, prior to any demolition or other work on existing control equipment.

.2 For each NSC or ASC being replaced, review the existing control programming and/or configuration settings, and prepare a written sequence of operation in laymen terms that describes the operating control of each control device. Where multiple control devices of the same type exist (e.g. terminal units), review at least three (3) randomly selected controllers to verify the same control functions; a single written control sequence for each type controller is sufficient.

.3 Provide a copy of these documentation to the Owner.

.4 Except where otherwise specified for new sequence of operations, program and/or configure software for replacement NSC and ASC to achieve the same control functionality and sequence of operation of the pre-existing NSC and ASC controllers, and configure setpoints to match pre-existing controller values.

3.3 Existing Condition Survey

.1 Conduct a condition survey of existing control devices:

.1 test, inspect and report on existing devices which are to be incorporated into the BAS, for satisfactory operation within 30 days of award of contract and prior to installation of any new devices,

.2 for those items found in unacceptable condition, provide with report test data, original specification sheets or written functional requirements to confirm conclusion,

.3 Owner to arrange for repair or replacement of those existing items judged defective, but shown to be re-used in BAS and control system,

.4 items thus repaired or replaced by Owner will be returned to site and handed over to Contractor under this Section for storage, installation, testing, and commissioning.,

.5 warrant reused devices that have been rebuilt or repaired. Demonstrate satisfactory operating condition of reused devices at time of acceptance,

.6 responsibility for existing control devices that have been reused is to terminate at end of warranty period.

3.4 Demolition and Removals

.1 Unless specifically noted or shown otherwise, remove existing control components made redundant:

.1 room thermostats, controllers, auxiliary electronic devices, pneumatic controllers and relays, control valves, electronic sensors, and transmitters: to be removed and placed in storage as directed by Owner.

.2 local control panels: removed and placed in storage as directed by Owner.

.2 Remove and dispose of existing conduits, wiring and tubing in all areas (including above accessible ceilings) as they become redundant;

.1 remove existing control compressed air systems and, where applicable, connect to new control air system;

.2 existing hardwired interlocks to remain installed in systems.

.3 In existing areas not otherwise involved in renovations, arrange and pay for holes and marks left by decommissioning and removal of control components, wiring, conduit, and tubing to be patched and refinished to match existing.

3.5 Maintaining Existing System Operation

.1 Mechanical systems to remain in operation and to maintain space conditions between hours of 6 a.m. and 9 p.m., Monday through Friday.

.2 In these periods mechanical control system shut downs of up to 15 minutes may be permitted, after obtaining written agreement from Owner.

.3 When time required for cut-over of controls will not meet these constraints, perform work outside of operating hours after making application; outlining areas affected; and likely length of interruption, and obtain written agreement from Owner. .

.4 Maintain fan scheduling using existing or temporary time clocks or control systems throughout period of control system installation.

.5 Modify existing motor controllers to incorporate new local operator control switches for motors to be controlled through BAS system.

3.6 Installation of New Thermowells

.1 Existing piping services to remain in service during installation of thermowells.

.2 Coordinate with the trade contractor under Division 23 to install thermowells for new temperature sensors mounted on steel piping by hot-tapping in accordance with specification section 20 05 26.

3.7 Interfacing Between New and Existing Control Systems

.1 Certain building systems are to operate in event of building power failure or fire alarm. Under no circumstances should interfacing of equipment or controls modify these existing sequences of operation.

.2 Where tying new system into existing control equipment, show on shop drawings;

.1 signal levels,

.2 wire type,

.3 wire numbers, and

.4 terminal numbers.

.3 Before attempting replacement of existing control systems, install new field panels, controllers and associated devices loose-ended ready for system changeover.

.4 Submit written request to Owner setting out proposed starting time for changeover, duration of system down time, and establishing extent of interruption to operation of existing control system.

.5 Do not proceed with work until Owner's written approval of time for, duration of, and extent of interruption is received.

.6 Subsequent decommissioning and removal of control components to be carried out without interfering with normal operations or creating an interruption in service of any building systems except through an approval process similar to that noted above.

End of Section

Master revised: June 10, 2021

BUILDING AUTOMATION CONTROL PANELS AND WIRING
25 05 12

1 GENERAL

1.1 Scope

.1 Provide building automation control panels for mounting and securing building automation control equipment and devices.

1.2 Related Sections

.1 Without limiting the scope of work or applicability of other specification sections, the work under this section directly integrates with or refers to the following specification sections:

- .1 20 05 12 Common Electrical Requirements for Mechanical Services
- .2 25 30 16 Building Automation Instrumentation

1.3 Definitions and Abbreviations

.1 The following definitions apply to this section.

- .1 ***Control wiring*** – has the meaning as defined in specification section 20 05 12.
- .2 ***Extra-low voltage*** – any voltage not exceeding 30 V (has the same meaning as per CSA C22.1)
- .3 ***GUI*** means “graphic user interface”, to display system data to the user and to allow the user to enter operating commands and data selection.
- .4 ***Power wiring -*** has the meaning as defined in specification section 20 05 12.

1.4 Applicable Codes and Standards

.1 Product standards:

- .1 CSA C22.2 No. 0.3 Test Methods for Electrical Wires and Cables
- .2 CSA C22.2 No. 14 Industrial Control Equipment

  CSA C33.3 No. 18.5/UL 1565

  Positioning Devices
- .3 CSA C22.2 No. 66.2 Low Voltage Transformers – Part 2: General Purpose Transformers

  CSA C22.2 No. 66.3 / UL 5085-3

  Low Voltage Transformers – Part 3: Class 2 and Class 3 Transformers
- .4 CSA C22.2 No. 72 Heater Elements
- .5 CSA C22.2 No. 94.1 Enclosures for Electrical Equipment, Non-Environmental Considerations
- .6 CSA C22.2 No. 223 Power Supplies with Extra-Low-Voltage Class 2 Outputs.

1.5 Qualified Tradesperson

.1 Work to be performed by qualified, licensed and recognized firm with an established reputation in this field, using tradesperson holding applicable certificates of competency.

1.6 Registration and Inspection

.1 Where control panels are not listed in accordance with CSA C22.2 No. 14, arrange and pay for field inspection by the AHJ for electrical safety.

1.7 Submittals

.1 Shop drawings:

.1 submit product data sheets for materials specified herein.

.2 submit shop drawings for control panels including wiring diagrams and panel layout details.

2 PRODUCTS

2.1 General

.1 Provide custom factory-made building automation control panels including all factory-installed devices and equipment required for operation of associated building equipment or systems including but not limited to DDC controllers, GUI, power supplies, transducers, solenoid air valves, relays and accessories.

.2 Comply with the requirements of specification section 20 05 12 for products not otherwise specified herein.

.3 Provide equipment which functions and meets detailed performance criteria when operating under the following conditions:

.1 ambient temperature:

(a) indoors: 4°C to 40°C (39°F to 104°F)

(b) outdoors: -30°C to + 40°C (-22°F to 104°F)]

.2 ambient relative humidity: 10% to 90% non -condensing,

.3 electrical power service: 120 VAC +/- 10%, 1 phase, 60 Hz nominal.

2.2 Control Panels

.1 Panel enclosure:

.1 indoors: type 2 with sprinkler shield, 3R or 4 to CSA C22.2 No. 94.1 (NEMA 2, 3R, or 4),

.2 material: galvanized steel,

.3 with hinged door and lock,

.4 integral cooling fans and vents with power supplies, wiring and circuit protection,

.5 mounting backplate and/or DIN rails for mounting of wiring devices, controllers, sensors, transducers, and relays,

.6 conduit openings and adapters in sufficient quantities and sizes to accommodate wiring terminating within enclosure,

.7 document holder inside panel, to include one set of as built, plasticized control Shop Drawings for equipment served by that panel permanently affixed to cabinet frame,

.8 enclosure finish: vendors standard colour,

.2 GUI display:

.1 surface mounted on or semi-recessed in panel front door where GUI is required by other specification sections of Division 25.

.2 where GUI is mounted on the controller inside the panel, provide panel door cut-out with viewing glass to allow viewing only of GUI with panel door closed.

.3 Control panel layout and construction:

.1 enclosures to be of sufficient size to house control components including controllers and associated transformers, control relays, wiring, conduits and other auxiliary equipment, so as to allow access for maintenance and replacement of components without requiring removal of other components.

.2 permanent engraved labels with black lettering on white background indicating;

(a) stating applicable building system name and reference number.

(b) function of each panel door mounted device.

.3 mount air pressure gauges on front of panel door to allow viewing from outside the panel,

.4 support wiring in cable ducts; arrange cable ducting and install wiring in a neat and workmanlike manner,

.5 provide numbered terminal strips for field wiring terminations; do not terminate field wiring directly on control devices or controllers. Arrange terminal strips in a common location adjacent to minimize routing and quantity of field wiring inside of panel.

.6 label both ends of internal wiring with label markers using name of cable function, or to identify wire number as shown on panel shop drawings,

.7 layout circuit fuses to facilitate location and replacement; provide labels at each fuse holder identifying fuse number and replacement fuse type and size,

.4 Control devices mounted on panel door-front:

.1 Key-lock operated main panel power ON-OFF switch,

.2 alarm buzzer silence pushbutton (where applicable),

.3 alarm reset pushbutton (where applicable),

.4 indicating lights:

(a) main panel power ON (white),

(b) summary alarm (red),

(c) other indicating lights as specified by control sequences.

.5 Panel mounted alarm devices:

.1 alarm buzzer (where applicable).

.6 Cable Ducts

.1 non-metallic cable ducting with removable cover, slotted access cable restraints,

.2 ambient temperature rating: -40 to +60°C (-40 to +140°F)

.3 listed to CSA C33.3 No. 18.5/UL 1565.

.7 Terminal strips:

.1 NEMA finger-safe terminal blocks, spring-clamp or screw fastened,

.2 directly fastened to panel backplane or DIN rail mounted.

2.3 Power Supplies and Line Filtering

.1 For control panels and for field installed devices.

.2 Transformers and Power Supplies:

.1 industrial control transformers to be listed to CSA C22.2 No. 66-2, and temperature rated for 40°C,

.2 control transformers to be listed to CSA C22.2 No. 66-3,

.3 AC/DC power supplies to be listed to CSA C22.2 No. 223,

.4 provide over-current protection in primary and secondary circuits,

.5 limit connected loads to 80% of rated capacity.

.3 DC power supplies:

.1 output to match equipment current and voltage requirements,

.2 units to be full-wave rectifier type with output ripple of 5.0 mV maximum peak-to-peak. Regulation to be 1.0% line and load combined, with 100-microsecond response time for 50% load changes,

.3 units to have built-in over-voltage and over-current protection and to be able to withstand 150% current overload for at least three seconds without trip-out or failure,

.4 units to operate between 0°C and 50°C (32°F and 120°F).

.5 EM/RF to meet FCC Class B and VDE 0871 for Class B and MILSTD 810C for shock and vibration.

.4 Power Line Filtering:

.1 provide internal or external transient voltage and surge suppression for workstations and control modules,

.2 surge protection:

(a) dielectric strength of 1000 V minimum,

(b) response time of 10 nanoseconds or less,

(c) transverse mode noise attenuation of 65 dB or greater,

(d) common mode noise attenuation of 150 dB or greater at 40-100 Hz.

2.4 Miscellaneous Electrical Control Devices

.1 Control Relays:

.1 plug-in type, UL listed, with dust cover and LED "energized" indicator.

.2 contact rating, configuration, and coil voltage suitable for application.

.3 NEMA 1 enclosure for relays not installed in local control panels.

.2 Time Delay Relays:

.1 solid-state plug-in type, UL listed, with adjustable time delay adjustable ±100% from set point shown.

.2 contact rating, configuration, and coil voltage suitable for application.

.3 NEMA 1 enclosure for relays not installed in local control panels.

.3 Override Timers:

.1 spring-wound line voltage, UL Listed, with contact rating and configuration by application unless implemented in control software.

.2 0-6 hour calibrated dial.

.3 flush mounted on local control panel face.

.4 Electronic signal isolation transducers:

.1 provided whenever;

(a) an analog output signal from BAS is connected to an external control system as an input (such as chiller control panel) or

(b) BAS is to receive an analog input signal from an external remote system.

.2 designed for ground plane isolation between systems.

2.5 Electro-Pneumatic (E/P) Transducers

.1 To convert 4-20 mA, 0-5 Vdc, or 0-10 Vdc analog control input signal to a 20-100 kPa (3-15 psig) output signal;

.1 separate span and zero adjustments,

.2 manual output adjustments,

.3 output pressure gauge assembly,

.4 feedback loop control,

.5 mid-range air consumption of 0.05 NL/s (0.1 SCFM).

2.6 Pressure-Electric (P/E) Switches

.1 To convert pressure signal to activate electric switch;

.1 diaphragm operated SPDT. snap acting contacts with electrical rating suitable for application,

.2 designed to withstand up to 170 kPa (25 psi) input pressure,

.3 adjustable cut-in and cut-out settings between 25 and 140 kPa ([3 and 20 psi).

2.7 Additional Requirements for Outdoor Panels

.1 The following additional requirements apply where control panels are installed outdoors, or indoors in unheated spaces.

.2 Enclosure: type 4, 4X or 12 to CSA C22.2 No. 94.1 (NEMA 4, 4X or 12),

.3 Thermally insulated on all interior surfaces

.1 minimum thickness: 25 mm (1 in) at a maximum thermal conductivity of 0.0365 W/mK (0.0211 Btuh/ft°F) , or equivalent minimum RSI= 0.68 m^2K/W (R = 3.86 $ft^2°F/BTUH$).

.4 Mount GUI and other front-mount devices on inner front panel behind main panel door.

.5 Electric resistance panel heater:

.1 electric resistant heaters listed to CAN/CSA C22.2 No. 72,

.2 sized to maintain panel interior temperature at not less than 4.5°C (40°F), at the ambient design temperature.

.3 integral or line mounted thermostat control, set with a temperature deadband of ON at 4.5°C (50°F) and OFF at 12°C (55°F).

2.8 Wiring and Raceways

.1 Electrical materials, equipment and installation procedures to conform to the electrical safety code applicable to the location of the Work, in accordance with the requirements of specification section 20 05 12, and as specified herein.

.1 conductors for digital functions: 18 AWG minimum, twisted and shielded,

.2 conductors for analog functions: 18 AWG minimum, twisted and shielded, 2 or 3 wire to match analog function hardware.

.3 conductors for transformer current wiring: 16 AWG minimum,

.4 conductors for sensor wiring: 22 AWG minimum, twisted and shielded, 2 or 3 wire to match analog function hardware. Provide additional conductors as to support supplemental features of sensor (i.e. set-point adjustment, override, etc.).

.2 Non-continuous cable supports:

.1 Sling strap:

(a) Galvanized steel support bracket with adjustable polyethylene support sling.

Standard of Acceptance

- nVent – fig. Caddy Cable 425

3 EXECUTION

3.1 Control Panel Installation

.1 Install transmitters, transducers, controllers, solenoid air valves and relays in control panels.

.2 Mount control panels to poured concrete or concrete block walls on mounting channels; do not fasten directly to the wall.

.3 Where control panels are located away from concrete walls, provide a fabricated floor-mounted galvanized-steel channel support frame to mount control panels. Design support frame to withstand applicable seismic loads.

.4 Install control panels with user interface devices on the panel door so that the centerline of the principle interface device is between 1500 and 1600 mm (60 to 64 in) above floor level.

.5 Install other panels so that the top of the panel is located between 1800 and 1900 mm (72 to 76 in) above the floor.

.6 Trim-back or neatly collect excess field wiring inside of control panels.

3.2 Field Wiring Installation

.1 Provide power wiring and control wiring as needed to support operation of the building automation system. Refer to Section 20 05 12 for description of division of work and responsibility.

.2 Installation of field wiring for power wiring and control wiring to conform to specification section 20 05 12 except/and as specified herein.

.3 During installation follow cable manufacturer’s specified cable pulling tension, and recommended minimum bend radius.

.4 Verify entire network's integrity following cable installation using appropriate tests for each cable.

.5 Install lightning arrester according to manufacturer's recommendations between cable and ground wherever cable enters or exits the building.

.6 Each run of communication wiring to be continuous length without splices.

.7 Label communication wiring to indicate origin and destination.

.8 Ground coaxial cable according to Division 26 requirements.

.9 Fiber optic cable installation:

.1 do not exceed pulling tensions specified by cable manufacturer. Post-installation residual cable tension to be in accordance with cable manufacturer's specifications,

.2 do not exceed minimum cable and unfaceted fiber bend radii specified by cable manufacturer.[][

3.3 Conduit and Raceways

.1 Run power wiring and control wiring in conduit except where otherwise specified herein.

.2 Extra-low voltage control wiring located in horizontal service spaces above dropped ceilings may be run exposed (without conduit) provided that wiring is;

.1 installed neatly and parallel to building lines,

.2 supported from J-hooks at intervals not exceeding 1200 mm (4 ft),

.3 have a FT6 rating in accordance with CSA C22.2 NO. 0.3 when installed in a supply or return air ceiling plenum

.3 Do not run any BAS wiring in IT infrastructure cable trays

.4 Run conduit and raceways parallel to building lines and be secured to building structure.

.5 Where conduit leaves heated areas and enters unheated areas, seal conduit with weather-tight sealant at the first junction box in the unheated space.

3.4 Power Conversion and Control Relays

.1 Provide interposing and motor control relays at local item of equipment or at associated MCC as applicable.

.2 Provide control transformers and power supplies for system components requiring power supply that do not have integral control transformers.

.3 Where point schematics and specifications indicate auxiliary contact provision, provide instrumentation, wiring, conduit, power supplies and services as to integrate these points into BAS.

.4 Mount transformers in enclosures adjacent to equipment served.

3.5 Cleaning

.1 Prior to handover to the Owner, remove all debris from and vacuum clean inside of control panels. Clean exterior surfaces of panels including GUI displays.

End of Section

BUILDING AUTOMATION TERMINAL UNIT CONTROLLERS
25 14 17

1 GENERAL

1.1 Scope

.1 Provide application specific controller for terminal units ("TU-ASC").

1.2 Related Sections

.1 Without limiting the scope of work or applicability of other specification sections, the work under this section directly integrates with or refers to the following specification sections:

.1	23 35 13	Terminal Units
.2	25 05 01	Building Automation Common Work Results
.3	25 05 12	Building Automation Control Panels and Wiring
.4	25 15 16	Building Automation Software for Control and Monitoring

1.3 Applicable Codes and Standards

.1 Product standards:

.1	CSA C22.2 No. 94.1	Enclosures for Electrical Equipment, Non-Environmental Considerations
.2	CSA C22.2 No. 205	Signal Equipment
.3	CAN/CSA-E60730-2-14	Automatic Electrical Controls - Part 2: Particular Requirements for Electric Actuators
.4	UL 864	Standard for Control Units and Accessories for Fire Alarm Systems

1.4 Network Integration Requirements

.1 Controller Tier 2 network communications:

.1 [in accordance with specification section 25 05 01].

.2 [BACnet MSTP native device].

.3 [LONWORKS FTT twisted pair native device].

1.5 Coordination with Terminal Unit Manufacturer

.1 Terminal unit controllers and actuators to be factory-installed on terminal units by terminal unit manufacturer in accordance with specification section 20 35 13. Direct costs for factory installation of controllers and actuators on terminal units are directly born by terminal unit manufacturer.

.2 Coordinate with the terminal unit manufacturer for delivery of products and requirements for product installation, including requirements for power supplies and overcurrent protection.

.3 Arrange, pay, and be responsible for shipment of terminal unit controllers free-issue to the terminal unit manufacturer factory, without charge to the terminal unit manufacturer (FOB destination, freight prepaid).

1.6 Submittals

.1 Shop drawings:

.1 Submit product data sheets for materials specified herein,

.2 Clearly mark each version type along with the applicable control sequence reference.

2 PRODUCTS

2.1 Environmental Conditions

.1 Provide equipment which functions and meets detailed performance criteria when operating in following minimum ambient condition ranges:

.1	temperature:	- 0°C to 32.2°C (32°F to 90°F)
.2	relative humidity:	10% to 90% non -condensing
.3	electrical service:	single phase, 120 VAC +/- 10%, 60 Hz nominal,
.4	operating voltage:	operate at 90% to 110% of nominal voltage rating and to perform an orderly shutdown below 80% nominal voltage,
.5	electrical noise: and from	operation to be protected against electrical noise of 5 to 120 Hz keyed radios up to 5 W at 1 m (3 ft).

.2 Components installed within motor control devices to be designed to operate with transient electrical fields occurring within these devices.

2.2 Terminal Unit Application Specific Controllers (TU-ASC)

.1 General:

.1 stand-alone, multi-tasking, multi-user, real time digital processors with hardware, software, and communications interfaces, power supplies, and input/output modular devices,

.2 fully programmable to create custom control logic to meet requirements of the sequence of operations as shown,

.3 listed to CAN/CSA-E60730-2-14 or CSA C22.2. No. 205,

.4 listed to UL864 for smoke control and smoke venting applications,

.5 BTL or LonMark certified as an Application Specific Controller (as applicable to network integration requirements),

.6 native BACnet or Lonworks firmware (as applicable to network integration requirements),

.7 removable (hot swappable) without disconnection of terminals and wiring,

.8 have access to data within network to accomplish global control strategies,

.9 support firmware upgrades without need to replace hardware,

.10 both firmware and controller database can be loadable over the BAS network or by local service port,

.11 continuously perform self-diagnostics, communication diagnosis, and provide both local and remote annunciation of any detected component failures, low battery condition; and upon failure to assume predetermined failure mode.

.12 monitor status of overrides and inform operator if automatic control has been inhibited, and allow operator to manually override automatic or centrally executed inhibit command.

.2 Memory:

.1 sufficient non-volatile memory to support its own BIOS and programming information in the event of loss of power.

.3 GUI:

.1 face mounted LED type annunciation to display operational mode, and power and communication status.

.4 Time clock:

.1 controllers that perform scheduling operations to have on board real-time clock.

.2 in network application, time clock synced to associated Network Supervisory Controller.

.5 Communications:

.1 communication port (RS-232 DB-9, RJ-11 or RJ-45) for connection to laptop computer or operator interface device to allow memory downloads and other commissioning and troubleshooting operations.

.2 TU-ASCs reside on BAS Tier 2 network for network communications.

.3 communication services over BAS networks to support operator interface performance, and value passing as follows;

(a) connection of an operator interface device to any one controller on network to allow operator to interface with other controllers as if that interface were directly connected to those other controllers.

(b) data, status information, control algorithms, inputs, outputs, etc., from any controller on network is to be available for viewing and editing through operator interface device that is connected to any controller on network.

(c) links to execute control strategies to be programmed and tested so that an operator with appropriate password privileges is able to edit these links either by typing in standard object addresses, or by using simple point and click commands.

(d) daily routine automatically synchronize time clocks in controllers. An operator initiated change to master time clock setting to be automatically broadcast to other controllers on network.

(e) minimum baud rate for peer-to-peer communication between controllers in system LAN to be at 10 Mbps and communication with low level controllers, to be at 76 Kbps.

.6 Input/Output isolation:

.1 I/O protected such that shorting of point to itself, shorting of point to another point, or shorting of point to ground will not damage controller.

.2 I/O protected such that voltage spikes of up to 24 V, of any duration, and any polarity will not damage controller.

.7 Input/Output capacity:

.1 I/O capacity as required to suit control sequence plus specified spare I/O.

.2 Analog Inputs:

(a) for monitoring of variable measurement properties,

(b) field selectable for 0-10 VDC, 4-20 mA, or resistance values for thermistors or RTD.

.3 Analog Outputs:

(a) for control of modulating control devices,

(b) modulating electronic signal, either 0 -10VDC or 4 -20mA.

.4 Digital Inputs:

(a) for monitoring of on/off signals from remote devices,

(b) provide wetting current of at least 12 ma and to be compatible with commonly available control devices.

.5 Digital Outputs:

(a) for On/Off. Open/Close control operation, or pulsed low voltage signal for pulse width modulation control,

(b) relays contacts: minimum 0.5 A @ 24 Volts AC or DC maximum,

(c) each relay to be configured as normally open or normally closed, and either dry contact or bussed.

.6 Universal Inputs:

(a) field configurable for analog or digital inputs,

(b) thermistor, dry contacts, or 0-5VDC with 0-10K Ohm input impedance.

.7 Spare I/O capacity, each TU-ASC:

(a) minimum of two (2) spare I/O point capacity for each point type, which may be met by two (2) only universal type,

(b) future use of spare capacity to involve provision of field device, field wiring, point database definition, and custom software,

(c) these spare points to be configurable without additional controller boards or point modules,

(d) wiring connections to be made to field-removable, through modular terminal strips or termination cards connected by ribbon cable.

.8 Airflow differential pressure sensor:

.1 integral, factory calibrated true differential pressure sensor, range of 0 – 250 Pa (0 – 1 in.w.c.),

.2 calibration data stored in non-volatile memory for at least 15 velocity/pressure points within terminal unit range,

.3 two (2) silicon sample tubing (for connection to terminal unit flow sensor station),

.4 software conversion to airflow rate based on terminal box duct size.

.9 Airflow station:

.1 air flow sensor element supplied with terminal unit.

.10 Specific control of ancillary devices:

.1 for specific control of ancillary equipment as required by sequence of operations,

.2 Input points:

(a) room pressurization control based on calculated volumetric offset or direct differential pressure measurement,

(b) room occupancy sensor and/or override switch,

.3 Output points:

(a) modulating (non-floating point) hydronic control valves for reheat coil or SCR electric reheat coil,

(b) modulating (non-floating point) hydronic control valves for perimeter heating units,

(c) slave operation of return air/exhaust air terminal boxes,

(d) lighting On/Off control.

.11 Power/communications interruption:

.1 controller continue to provide control functions in event of network communication failures,

.2 incorporate sufficient non-volatile memory to store critical configuration data in event of loss of normal power, and sufficient battery backup to support real time clock and volatile memory for minimum of 72 hours,

.3 after loss of power and then subsequent return of mains power, controller to;

(a) automatically reboot and return to service,

(b) zero output values prior to reinitiating controls sequence,

(c) restart control sequence at “Normal Operation” unless a supervisory controller provides a command to operate in a different mode of operation.

.4 where TU-ASC are used as part of a smoke control or smoke venting system, on loss of communication, controller to operate in a default standalone smoke control or smoke venting control mode as defined in the sequence of operations.

2.3 TU-ASC Damper Actuator

.1 Damper actuator to conform to specification section 25 30 13 and as follows.

.2 Damper actuator is field replaceable without requiring replacement of the TU-ASC controller.

2.4 Application Specific Controller Software

.1 Software for TU-ASC to conform to specification section 25 15 16 except/and as specified herein.

3 EXECUTION

3.1 Installation

.1 Provide TU-ASC’s of type and I/O capacity to suit control and instrumentation strategies as detailed in sequence of operation, and as shown.

.2 Install equipment in accordance with manufacturer's recommendations.

.3 Mount controllers inside terminal unit control enclosures which meet a Type 1 enclosure to CSA C22.2 No. 94.1.

3.2 Power and Wiring

.1 Provide control power transformer and overcurrent protection to suit controller requirements.

.2 Provide power wiring from electrical circuits or junction boxes provided by Division 26 and extend to each TU-ASC; refer to specification section 20 05 12 and to mechanical and/or electrical drawings for locations of circuits or dedicates junction boxes.

.3 Provide control wiring in accordance with specification section 25 05 11 for field installed instrumentation and control devices.

.4 Where controlled room is served by terminal units on both supply and return, either:

.1 use a single TU-ASC to control dampers on both supply and return terminal units, or

.2 use separate TU-ASCs for both supply and return terminal units.

3.3 Tier 2 LAN Device Density

.1 Total number of devices on each Tier 2 LAN not to exceed 80% of maximum device limitations (with the use of repeater devices).

3.4 Programming

.1 Provide custom programming to meet the control strategies as called for in the sequence of operation sections.

.2 Calculate the room air change rate per hour (“ACH”) based on each room volume and supply air terminal unit measured flow rate;

.1 calculate ACH and update current value on a one (1) minute sample rate,

.2 where more than one (1) terminal unit serves the same room, aggregate the airflow rates of all terminal units to represent to the total ACH of the room,

3.5 TU-ASC Database

.1 Provide a terminal unit configuration database for each TU-ASC. Data to include as a minimum:

- .1 room type,
- .2 room number,
- .3 number of terminal units serving the room,
- .4 device number,
- .5 terminal unit type (VAV, CAC, Dual Duct, etc.),
- .6 terminal unit size,
- .7 minimum and maximum air flows,
- .8 room design air change rate,
- .9 room design differential airflow rate (where terminal units are provided on both supply and return terminal units),
- .10 reheat air flow: minimum turndown air flow prior to use of reheat,
- .11 calibration factor for field calibration determines by air balancing,
- .12 occupied temperature setpoint, cooling,
- .13 occupied temperature setpoint, heating,
- .14 occupant selectable maximum room temperature setpoint,
- .15 occupant selectable minimum room temperature setpoint,
- .16 unoccupied cooling temperature setpoint,
- .17 unoccupied heating temperature setpoint,
- .18 afterhours maximum Timer: maximum time occupant may override unoccupied cycle,
- .19 internal cooling Signal: used to reset supply air temperature if more cooling is required,
- .20 internal Heating Signal: used to reset supply air temperature is less cooling is required.

.2 Configuration database updates:

- .1 allow updating of control configuration by individual room number.
- .2 allow updating of control configuration by grouped “Room Type”; create room type groups as follows:
  - (a) private offices,
  - (b) open plan offices,
  - (c) corridors,
  - (d) common elements (washrooms, janitor closets),
  - (e) lobbies,
  - (f) kitchens, cafeterias and dining spaces,
  - (g) maintenance, workshops. storage rooms,
  - (h) service rooms,

.3 Database to also include current measured values:

- .1 current measured room temperature,
- .2 current measured airflow per TU-ASC,
- .3 current measured total room airflow rate where multiple TU-ASC serves the same room,

.4 current calculated supply/exhaust differential airflow rate (where terminal units are provided on both supply and return terminal units),

.5 current measured room pressure (if differential pressure sensors are provided),

.6 current actual calculated air change rate.

END OF SECTION

Master revised: June 9, 2022

BUILDING AUTOMATION SOFTWARE FOR CONTROL AND MONITORING 25 15 16

1 GENERAL

1.1 Scope

.1 Provide software for control and monitoring of building systems by BAS controllers.

.2 Refer to specification section 25 05 01 for common works requirements for software.

1.2 Related Sections

.1 Without limiting the scope of work or applicability of other specification sections, the work under this section directly integrates with or refers to the following specification sections:

.1 25 05 01 Building Automation Common Work Results.

2 PRODUCTS

2.1 Software General Requirements

.1 General

.1 Applications software for building systems operation and monitoring and energy management to reside and operate in system network supervisory controllers (NSC) and application specific controllers (ASC).

.2 Web-enabled access for NSC units; optional web-enabled for ASC.

.3 Using and editing of applications to be available to an operator with appropriate authorization, through operator workstation/browser interface or at other engineering workstations.

.4 Software to support concurrent operation of multiple standard and non-standard protocols including but not limited to:

(a) BACnet

(b) LonTalk

(c) MODBUS

(d) OPC

(e) SNMP

.5 Client browser compatibility:

(a) Microsoft Internet Explorer 11 and higher,

(b) Microsoft Edge 44 and higher,

(c) Firefox 70 and higher,

(d) Google Chrome 78 and higher,

(e) Safari 13 and higher for Mac,

2.2 Controller Application Programs

.1 PID Control Loops:

.1 Proportional Control, Proportional plus Integral (PI), Proportional plus Integral plus Derivative (PID), and Adaptive Control (self-learning).

(a) integral windup protection as a fundamental part of PID algorithm.

.2 Adaptive Control algorithm used on control loops, as indicated in the I/O summary, where the controlled medium flow rate is variable (such as VAV units and variable flow pumping loops).

.3 Adaptive control algorithm monitor the loop response characteristics in accordance with the time constant changes imposed by variable flow rates;

(a) the algorithm operates in a continuous self-learning manner and retains in memory a stored record of the system dynamics so that on system shutdown and restart, the learning process starts from where it left off and not from zero history,

(b) standard PID algorithms are not acceptable substitutes for variable flow applications since they will provide satisfactory control at only one flow rate and will require continued manual fine tuning.

.2 Scheduling:

.1 capable of scheduling each object or group of objects,

.2 separate schedules for each day of week with up to five start/stop pairs. (10 events)

.3 exception schedules defined up to year in advance and once events on exception schedule day have been executed, definition of the exception schedule day will be discarded and replaced by standard schedule for that day of week.

.4 up to 24 holiday schedules may be placed on scheduling calendar and will be repeated each year.

.5 ability to override programmed start/stop based on outside temperature reaching or exceeding an adjustable value, operator initiated, individual for each system,

.6 temporary scheduler, ability to alter current schedule on a one time basis.

.3 Optimal Start/Stop:

.1 delay startup of each HVAC system to latest possible time which will allow building space to reach target conditions occupancy time

.2 advance shutdown of each system to earliest possible time.

.3 include modeling techniques using building mass temperature and outdoor air temperature to predict building warm up and cool down times under different outdoor and indoor conditions.

.4 generate reports to show current value of variables, inputs and outputs involved and estimates of energy savings.

.4 Temperature Based Load Control:

.1 provide temperature setback or set-up according to programmed occupancy schedules with capability to assign separate schedules to each control zone,

.2 control of setback or set-up achieved through setpoint adjustment, cycling of systems or cooling plant temperature conditions occupancy time

.3 generate reports to show current value of variables, inputs and outputs involved and estimates of energy savings.

.5 Supply Air Reset:

.1 monitor heating and cooling loads in building spaces and adjust HVAC discharge sensors to most energy efficient levels which will still satisfy measured load zone.

.2 generate reports to show current value of variables, inputs and outputs involved and estimates of energy savings.

.6 Chilled Water Temperature Reset:

.1 monitor cooling loads at air handling units and other loads, and building space relative humidity, and adjust chilled water temperature to most energy efficient level while satisfying space dry-bulb temperature and relative humidity or average return relative humidity as determined in sequence of operation,

.2 generate reports to show current value of variables, inputs and outputs involved and estimates of energy savings.

.7 Airside Economizer:

.1 program to control outside and return and exhaust air dampers during the cooling season based on inside and outside dry-bulb temperature or enthalpy comparisons (operator selectable),

.2 modulate dampers to mix outside and return air for free cooling whenever outside temperature is less than the supply air temperature setpoint,

.3 use either return or outdoor air to effect smallest dry-bulb temperature/enthalpy change across the cooling coil whenever outside temperature is above the supply air setpoint.

.8 Grouping of Objects:

.1 able to group together objects associated with equipment based on function and location so that group may be used for scheduling, logging, assigning global commands and other applications.

.2 at a minimum, assemble the following groups

(a) each air handling unit and objects from all terminal units controllers associated with the specific air handling unit

(b) chilled water plant and objects from all air handling units and other cooling load equipment,

(c) hot water heating boilers or district heating heat exchangers, and all heating equipment.

.3 assemble other groups as directed by the Consultant, Commissioning Agent and Client,

.9 Electrical Demand Management:

.1 capable of managing electrical demand by monitoring power consumption from signals received from:

(a) pulse generator (provided under Division 26) mounted at building power meter,

(b) data exchange over Modbus from electrical distribution system Load Management System (LMS by Division 26),

(c) data exchange by Modbus directly from current, voltage and power monitoring equipment located in electrical switchgear and power distribution equipment,

(d) analogy inputs from power transducer or current transformers attached to building electrical feeder lines.

.2 if power consumption exceeds operator definable levels, system to be capable of automatically adjusting set-points, de-energizing low priority equipment, and taking other pre-programmed actions as described in Sequences of Operation to reduce demand.,

.3 if demand drops below operator defined levels, action will be taken to restore loads in predetermined order.

.10 Power Interruption Restart

.1 automatic BAS controller restart after a power failure,

(a) on resumption of power (normal or emergency transfer), command all equipment and devices to a de-energized state (system stop program).

(b) provide field verified time delay to permit all associated rotating equipment to come to a stop.

(c) initiate restart of systems in accordance with current operating schedule requirements, and Blackstart program.

.11 Blackstart (Staggered Start):

.1 capable of managing restart of BAS controllers and controlled equipment after power interruption,

.2 able to prevent controlled equipment from restarting simultaneously on power restoration after power outage (staggered start),

.3 user-selectable sequence to establish order in which equipment (or groups of equipment) is started, and time delay between starts.

.4 at least one NSC is provided with a UPS to allow controller to ride-through loss of utility power and transfer to emergency power, and then back to utility power, including during emergency power system testing;

(a) designated NSC is used to provide global “Blackstart” signal to all other NSC and ASC devices to initiate Blackstart routine once those controllers reboot,

(b) on receipt of Blackstart signal at NSC and ASC, restart BAS controlled equipment in a predefined sequence as further described in the Sequence of Operation,

(c) during testing of emergency power distribution equipment, signal the operator to shut-down defined critical equipment to avoid hard-stops of such equipment, including combustion equipment and chillers.

.12 Maintenance Management.

.1 able to monitor equipment status and generate maintenance alarms based upon user-designated run-time, starts, or performance limits.

.2 configured to deliver maintenance alarms based upon Sequences of Operation.

.13 Sequencing:

.1 able to sequence chillers, boilers, and pumps with lead, lag, standby, priority assignment based upon run time,

.2 configured as specified in Sequences of Operation.

.14 Duty Cycling:

.1 periodically cycles run and stand-by equipment to equalize usage, on a calendar basis.

.15 Smoke Management:

.1 provide smoke management, smoke venting and pressurization control and communication integration with Fire Alarm System.

.16 Energy Calculations.

.1 calculation routines to establish and accumulate instantaneous power demand in kW, flow rates in L/s temperature differences in C° and convert information to energy usage data.

.2 two algorithms;

(a) first one calculates sliding window average with operator specified window intervals. ,

(b) second one calculates fixed-window average with digital input signal to define start of window period and synchronize fixed-window average calculation with start time used by utility.

.17 Anti-Short Cycling:

.1 routines to protect binary output objects from short cycling with operator selected on-time and off-time minimums.

.18 On/Off Control with Differential:

.1 direct-acting or reverse-acting algorithm that cycles binary output object based on operator selected controlled variable, set point and differential.

.19 Run-Time Totalization:

.1 calculation routine that totalizes run-times for any binary input or object with operator selected high runtime alarms.

.2 delivered with run time totalization and alarms configured as specified in Sequences of Operation.

2.3 Alarm Management Program

.1 Alarm generation:

.1 each binary input and binary value object capable of generating an alarm based on an operator-specified state and to have capability to enable or disable this alarm,

.2 each analog object capable of generating an alarm based on an operator-specified high and low alarm limit and to have capability to enable or disable this alarm.

.3 delivered with alarms enabled as listed in Sequences of Operation.

.2 Alarm annunciation:

.1 annunciate alarm events on the system or equipment display page, including alarm setpoint condition (when in alarm),

.2 push alarm notification to email and text message, including hyperlinked direct to web-page (requires system log-in).

2.4 Graphics

.1 Multi-colour graphics with pre-defined control device symbols, to allow graphical representation of the system flow and control diagrams.

.2 Graphics generation:

.1 graphically based editing system that adds and edit dynamic data and system control symbols to background graphic saved in an industry standard format such as BMP, JPEG, or GIF,

.2 web graphics to be either HTML or JavaScript and require no plug-ins or use plug-ins that are widely available to end users such as Active-X or MacromediFlash.

.3 primary BAS network schematic to be skeletal elevation of BAS system with animated notes showing alarm and communication status for each system controller and operator interface,

.4 secondary network schematics for each system controller to have animated nodes showing alarm and communication status for each panel and active links to each panel,

.5 animated or active alarm and status flags to be provided for each point as noted on control schematics and Sequences of Operation. Areas or equipment where an alarm condition exists to be highlighted by means of colour or another visual indicator,

.6 facility site graphic to permit navigation to each floor plan graphics,

.7 individual graphics to be provided for each system and terminal unit;

(a) graphics to be based on schematics taken from Consultant CAD files[][and existing BAS graphic schematics that are not compatible with new software.].

.8 terminal unit floor plan graphics:

(a) use electronic CAD files, updated to reflect as-built conditions as shown on record drawings,

(b) display terminal units along with temperature and humidity sensors,

(c) presentation of thermal comfort by means of dynamic colours on floor plans; dynamic colours to indicate actual temperature of area, or preferably temperature relative to set-point of that area.

(d) graphic pointing technique to permit navigation to each individual control system shown on floor plan graphic.

.9 screens to be provided for;

(a) BAS network graphic

(b) facility site graphic

(c) primary equipment room floor plan graphics

(d) terminal unit floor plan graphics

(e) individual graphics for each system and terminal unit

(f) tabular graphics on per floor basis and primary system basis for terminal units

(g) tabular graphics for primary systems

(h) twenty (20) custom graphics to future detail

.10 Provide tools and documentation to edit supplied graphics by adding analog and binary values, dynamic text, static text, and animation files to background graphic, to create new graphics, and to integrate these revisions into system.

.11 Graphics library:

(a) furnish library of standard HVAC equipment graphics such as chillers, boilers, air handlers, terminals, cooling towers, and fan coils.

(b) library to include standard symbols for other equipment including fans, pumps, coils, valves, piping, dampers, and ductwork.

.12 Graphics library to be furnished in file format compatible with graphics generation package program.

2.5 Specific Software for Network Supervisory Controllers (NSC)

.1 Where an NSC is used for direct control of equipment or systems using integral I/O, NSC to also meet the requirements for specific software for ASC devices.

2.6 Specific Software for Application Specific Controllers (ASC)

.1 Memory resident and available to the programs a full library of DDC algorithms, intrinsic control operators, arithmetic, logic, and relational operators for implementation of control sequences.

.2 Make available DDC setpoints, gains and time constants associated with DDC programs to the operator for display and modification via the central operator interface and portable operators terminal.

.3 Adjustable execution interval of each DDC loop from two to 120 seconds in one second increments.

.4 Assignment of initialization values to all outputs to assure that controlled devices assume a failsafe position on initial system start up.

.5 Configurable ASC programming:

.1 Series of user selectable and configurable pre-programmed control functions.

.2 Control parameters field adjustable during balancing to compensate for variations in terminal unit installation, type and size.

3 EXECUTION

3.1 Software Version

.1 Update software to the most current version at time of hand-over to the Owner, at no additional cost to the Owner.

3.2 General Programming and Configuration

.1 Program and/or configure each NSC and ASC to suit the requirements of the sequences of operation.

.2 Set-up alarm conditions and setpoints as specified in the sequence of operation.

.3 Allow time for on-site programming and configuration of additional alarm conditions and setpoints as determined by the building operator during the first six (6) months after hand-over to the Owner. This support may be provided remotely where Owner has permitted access to the system.

3.3 Graphics Creation

.1 Create graphics for each building system being controlled or monitored, building floor plan, and control device to be displayed through point-and-click graphics,

.2 Configure graphic image for each controlled equipment to display:

.1 device name and/or number,

.2 control setpoint,

.3 current measured value,

.4 equipment status On/Off

.5 equipment part load status - % open, % run, etc.

.6 selector for manual override – equipment On/Off, equipment Open/Closed, etc.

.7 selector for duty-cycling lead/lag/standby selection.

.3 Create floor plans to include dynamically linked objects representing controlled building equipment, such as terminal units, and clicking on the object will display the data specified above.

.4 Create primary equipment room floor plan graphics to permit navigation to each individual system located within primary equipment rooms and to provide animated run and status indication for major equipment and active links to each major system.

.5 Existing system graphics that are compatible with new software may be transferred in present form to new BAS.

.6 Create separate alarm management pages to maintain a running list of alarm conditions, and which identifies:

.1 current alarms with a red banner,

.2 acknowledged alarms with a yellow banner,

.3 cleared alarms in a white banner.

.7 Alarm management page to include operator filter selections for:

.1 current, acknowledged and/or cleared,

.2 selectable alarm history range (start and end dates).

END OF SECTION

Master revised: April 9, 2021

BUILDING AUTOMATION INSTRUMENTATION
25 30 16.13

1 GENERAL

1.1 Scope

.1 Provide measurement switches, sensors, and transmitter instrumentation for building automation.

1.2 Related Sections

.1 Without limiting the scope of work or applicability of other specification sections, the work under this section directly integrates with or refers to the following specification sections:

- .1 20 01 13 Definitions and Abbreviations – Mechanical
- .2 23 11 33 Facility Fuel-oil Controls
- .3 25 05 01 Building Automation Common Work Results

1.3 Definitions

.1 The following definitions apply to this section.

- .1 ***Finished rooms/spaces*** means a room or space that is not a service room.
- .2 ***Instrumentation*** means products covered by this specification section.
- .3 ***Service rooms*** has the meaning as defined in specification section 20 01 13.

1.4 Applicable Codes and Standards

.1 Installation codes and standards:

- .1 CSA B51 Boilers, Pressure Vessels, and Pressure Piping Code

.2 Product standards:

- .1 CSA C22.2 No. 94.1 Enclosures for Electrical Equipment, Non-Environmental Considerations.

1.5 Design Criteria

.1 Pressure rating of instrumentation connected to pressure piping to be equal to or greater than the design pressure at the design temperature of the associated piping system.

1.6 Submittals

.1 Submit manufacturer product data sheets in accordance with the requirements of Division 01.

.2 Include Canadian Registration Numbers for applicable products.

1.7 Quality Control

.1 Products that are in contact with the process fluid of a piping system that is subject to registration under applicable boiler and pressure vessel legislation are to have Canadian Registration Numbers in accordance with CSA B51.

2 PRODUCTS

2.1 General

.1 Provide equipment which functions and meets detailed performance criteria when operating in the following minimum ambient condition ranges except where otherwise specified:

- .1 ambient temperature:

Instrument Location	Service Temperature Range	Notes
Indoor	4°C to 40°C (39°F to 104°F)	(a)

Notes:

(a) Unheated spaces to be treated as outdoor spaces.

(b) Temperature ratings may be met be use of heated actuator enclosure.

.2 Ambient relative humidity 10% to 90% non -condensing

.2 Components installed within motor controllers to be designed to operate with transient electrical fields occurring within these devices.

2.2 Temperature Switches

.1 Low temperature limit temperature switch:

.1 6m (20 ft) of sensing capillary sensitive to freezing air over any 400mm (15 in) section,

.2 automatic reset with fixed differential temperature,

.3 installed in multiples with one unit serving not more than 5 m^2 (40 sq. ft) of duct area.

.4 single pole double throw (SPDT) contacts,

.5 operating temperature range: 1.7°C to 7.2°C (35°F to 45°F),

.6 adjustable set point within specified range,

.7 protective enclosure.

.2 Temperature switches:

.1 sensing element of liquid, vapour or bimetallic type,

.2 adjustable set-point and differential of at least 0.22°C to 1.7°C (0.4°F to 3.0°F),

.3 snap action type rated at 120 volts, 15 amps or 24 volts DC,

.4 automatic in-operation and automatically reset when condition returns to normal,

.5 type:

(a) suitable for wall mounting on standard electrical box with protective guard, or suitable for insertion into air ducts with insertion length of 450 mm (18 in), or

(b) thermowell type with compression fitting for 20 mm (0.8 in) NPT well, mounting length of 100 mm (4 in), and immersion wells of type 316 stainless steel, or

.3 Strap-on-type temperature switch with helical screw stainless steel clamps:

.1 operating temperature range: 23°C to 57°C (75°F to 138°F) [38°C to 71°C (100°F to 160°F)],

.2 adjustable set point within specified range,

.3 single pole double throw (SPDT) contacts,

.4 protective enclosure.

2.3 Temperature Sensors – General Requirements

.1 Sensor element types:

.1 Resistance temperature device (RTD) of precision thin film platinum element type;

(a) linear characteristics over sensor range,

(b) reference resistance: 1000 ohm, ±20 ohms (2%) at 0°C (32°F),

(c) temperature resistance coefficient: 0/.0385 ohms/ohm/°C (0.0212 ohms/ohm/°F),

(d) accuracy: ±0.36°C at 21°C (±0.65°F at 70°F) accuracy

.2 Resistance temperature device (RTD) of precision thin film nickel element type;

(a) linear characteristics over sensor range,

(b) reference resistance: 1000 ohm, ±20 ohms (2%) at 21°C (70°F),

(c) temperature resistance coefficient: 5.4 ohm/°C (3.0 ohm/°F)

(d) accuracy: ±0.18°C at 21°C (±0.34°F at 70°F)

.3 Thermistor;

(a) non-linear negative temperature coefficient of resistance,

(b) reference resistance: 10,000 ohms at 25°C (77°F),

(c) accuracy: curve matched to ±0.2°C (±0.36°F) over 0°C to 70°C (32°F to 158°F),

(d) long term stability: 0.025°C (0.045°F) drift per year

.2 Sensor construction general requirements:

.1 2 integral anchored lead wires,

.2 waterproof sensor to sheath seal,

.3 strain minimizing construction,

.4 standard conduit box termination with cover,

.5 pig-tail wire leads with wire nuts or screwed terminal connector block,

.6 factory calibrated and capable of end to end (sensing element to BAS) accuracy of ±0.25°C (±0.5°F) over full range of measured variable,

.7 transducing circuit to convert output to signal compatible with equipment controller.

2.4 Temperature Sensors – for Ducts and Piping

.1 For installation in duct and piping systems.

.2 Averaging element type temperature sensors:

.1 averaging style element sensors, with minimum of four (4) encapsulated platinum 1 kohm RTD sensors per length,

.2 bendable aluminium or copper tubing construction,

.3 sensor operating temperature range from –40°C to 121°C (-40°F to 250°F).

.4 ambient relative humidity: 5 to 95% RH non-condensing,

.5 minimum immersion length: 1800 mm (6 feet).

.6 probe field-formable to minimum radius of 100mm (4 in) at any point along probe length, other than with 200 mm (8 in) of connector box, without degradation of specified performance,

.7 galvanized steel or polycarbonate junction box,

.8 provided as multiple RTD sensors where single averaging element cannot be located to provide proper duct or plenum temperature sampling.

.3 Duct mount probe type temperature sensors:

.1 provided for ducts of cross section less than 0.4 m^2 (4 sq. ft),

.2 sensor operating temperature range from –40°C to 121°C (-40°F to 250°F),

.3 copper or brass or stainless steel sheathed construction,

.4 ambient relative humidity: 5 to 95% RH non-condensing,

.5 metal mounting plate,

.6 probe length such that sensing element is between 35 and 70% of duct width or diameter,

.7 provided as multiple sensors where single element cannot be located to provide proper duct or plenum temperature sampling.

.4 Pipe thermowell-mounted temperature sensors:

.1 for measurement of fluid temperatures in piping,

.2 insertion elements for measurement of fluid temperatures with stainless steel sheath,

.3 sensor operating temperature range: –40°C to 121°C (-40°F to 250°F),

.4 spring loaded construction with compression fitting for 20mm (NPS ¾) well mounting,

.5 length suitable for application,

.6 stainless steel or chrome plated brass thermowells of size and material to suit relevant sensor, pipe and service.

.5 Outside air temperature sensors:

.1 insertion type for through-the-wall installation with stainless steel sheath,

.2 sensor operating temperature range: –25°C to 60°C (-13°F to 140°F),

.3 waterproof seal at wall,

.4 ambient relative humidity: 5 to 95% RH non-condensing,

.5 total active probe length: 100 mm to 150 mm (4 in to 6 in),

.6 non-corroding outdoor shield to minimize solar heating effect,

.7 inert section passing through wall to allow precise measurement of outdoor temperature.

2.5 Temperature Sensors – General Purpose Space Sensors

.1 For general use space/room temperature measurement.

.2 General purpose space temperature sensors – no display (type TS):

.1 hard-wired sensor only, no display,

.2 sensor operating temperature range: 4°C to 60°C (40°F to 140°F),

.3 enclosure: surface mounted, blank (no interface) plastic mono-chromatic guard with surface mounting plate and wall anchors,

.4 guard secured to mounting plate by screws or snaps.

.3 Space temperature sensors with display (type TSD):

.1 BAS network sensor with user interface display,

.2 user interface:

(a) LCD display, for measured values and setpoint values,

(b) temperature display resolution: 0.1°C (0.2°F)

(c) physical or virtual buttons for user adjustment of setpoints and selection of measured values.

.3 Programmable user input selection (buttons):

(a) physical or touchscreen buttons,

(b) sensor reading selection,

(c) sensor setpoint adjustment (temperature only),

.4 ambient relative humidity: 5 to 95% RH non condensing,

.5 temperature sensor: 10 kOhm,

.6 temperature sensor accuracy: ±0.2°C (±0.36°F)

.7 adjustable setpoint range (programmed default is 20°C to 25°C (68°F to 78°F)),

.8 BAS field-bus connector to allow local access to sensor and BAS controller and network,

.9 temperature setpoint remotely resettable from BAS,

.10 minimum/maximum limit set point values adjustable locally and remote from BAS,

.11 surface mounted plastic mono-chromatic guard with surface mounting plate and wall anchors,

.12 network connection: BACnet MSTP.

.13 guard secured to mounting plate by screws or snaps.

.4 Space temperature sensors with display and additional features (type TSD/x):

.1 Type TSD space temperature sensors with the following additional sensor elements, singly and in combination.

.2 Relative humidity sensor (type TSD/H)

(a) accuracy: ±3% RH of reading,

.3 Carbon Dioxide sensor (type TSD/C):

(a) dual beam, self-calibrating NDIR detection,

(b) range: 0 – 2000 ppm

(c) accuracy: ±50 ppm + 2% of measured value at 25°C (77°F)

(d) stability: 20 ppm/year

.4 Occupancy sensor (type TSD/O):

(a) passive infrared motion sensor,

(b) range: 5 m (16 ft) minimum,

(c) sweep coverage: 100° horizontal.

.5 Special purpose space temperature sensors - Secure Areas (type TSS):

.1 hard-wired sensor only, no display,

.2 sensor operating temperature range: 4°C to 60°C (40°F to 140°F),

.3 enclosure:

(a) stainless steel flat plate surface type with sensor epoxy-bonded to back of cover plate,

(b) secured to standard electrical junction box with Torx head fasteners with center-pin.

2.6 Humidity Sensors – General Purpose

.1 Sensor construction general requirements:

.1 measurement operating ranges of 10 to 100% R.H.

.2 sensor operating temperature range from –40°C to 121°C (-40°F to 250°F)

.3 solid state sensing element,

.4 accuracy of ± 3% RH reading over range of 5 to 95% R.H.,

.5 independent, non-interactive span and zero adjustments,

.6 0-100% linear proportional output signal indicating relative humidity, 4-20 mA, 0-5 Vdc or 0-10 Vdc,

.7 strain minimizing construction,

.8 screwed terminal connector block.

.2 Duct mount probe type humidity sensors:

.1 metal mounting plate,

.2 constructed with 304 stainless steel element enclosure,

.3 length such that sensing element is between 35% and 70% of duct width or diameter from duct wall.

.3 Outside air type humidity sensors:

.1 weatherproof enclosure with cover,

.2 waterproof seal.

.4 Space humidity sensors (not included as part of a space temperature sensor):

.1 surface mounted plastic guard with surface mounting plate and wall anchors

.2 guard secured to mounting plate by screws,

.3 analogue LCD humidity display.

2.7 Duct Type Combination Temperature and Humidity Sensors – General Purpose

.1 Where both temperature and humidity are shown to be measured at same location or in same airstream, use of single measuring unit is permitted provided that features and performance of both the temperature sensor and the humidity sensor are in accordance with requirements of this specification.

2.8 Pressure Switches

.1 General:

.1 device pressure ratings – water, compressed gases and vapours: not less than the design pressure of the applicable piping system specification.

.2 device pressure rating – ventilation ducts: minimum 14 kPa (2 psi).

.2 Differential pressure switches:

.1 spring loaded diaphragm type,

.2 suitable for use with air, inert gas, water, glycol, steam,

.3 adjustable set-point and differential,

.4 snap acting SPDT contacts rated at 120 volts, 15 amps AC or 24 volts DC,

.5 switch mounted with diaphragm in vertical plane,

.6 automatic in operation and automatically reset when condition returns to normal,

.7 operating temperature range: 0°C to 60°C (35°F to 140°F),

.8 operating humidity: 10 to 90% RH non-condensing,

.9 high and low pressure ports, brass hose barbed pressure fittings suitable for Ø8 mm (¼ in) tubing,

.10 mounting bracket suitable for duct mounting,

.11 dust proof enclosure,

.12 screw terminal block.

.3 Pressure switches:

.1 bourdon tube, bellows or diaphragm type,

.2 suitable for use with air, inert gas, water, glycol, steam, ammonia or non-corrosive refrigerants,

.3 selected with span of not greater than twice maximum set pressure,

.4 adjustable set-point,

.5 snap acting SPDT contacts rated at 120 volts, 15 amps AC or 24 volts DC,

.6 automatic in operation and automatically reset when condition returns to normal,

.7 dust proof enclosure,

.8 screw terminal block.

2.9 Pressure Sensors/Transmitters

.1 General:

.1 device pressure ratings – water, compressed gases and vapours: not less than the design pressure of the applicable piping system specification.

.2 device pressure rating – ventilation ducts: minimum 14 kPa (2 psi).

.2 Duct static pressure sensors:

.1 for static and differential static pressure measurement of duct airflow,

.2 type: diaphragm driven, capacitance change type, 0-100% linear proportional output signal indicating static pressure or differential pressure at station,

.3 selected with span of not greater than twice the maximum static pressure and not less than twice differential pressure at shut-off.

.4 output: 4-20 mA, 0-5 Vdc or 0-10 VDC,

.5 power supply: 24 VAC/VDC,

.6 stainless steel duct probe, with length equal to between 35% and 70% of duct width or diameter,

.3 Piping static pressure and differential pressure sensors:

.1 for static and differential static pressure measurement for liquids, gases and vapours,

.2 type: diaphragm driven, capacitance change type, 0-100% linear proportional output signal indicating static pressure or differential pressure at station,

.3 stainless steel wetted parts,

.4 output: 4-20 mA, 0-5 Vdc or 0-10 VDC,

.5 power supply: 24 VAC/VDC,

.4 Piping static pressure and differential pressure transmitters:

.1 for static and differential static pressure measurement for liquids, gases and vapours,

.2 type:

(a) type 316L stainless steel diaphragm driven, capacitance change type,

(b) signal conditioning electronics for 0-100% linear proportional output signal,

.3 operator interface: LCD display of measured process value, with selectable units.

.4 wetted parts: type 316L stainless steel,

.5 process connections:

(a) type 316L stainless steel threaded fitting,

(b) NPT to ASME B1.20.1,

.6 output: 4-20 mA

.7 field adjustable zero and span,

.8 selected with span of not greater than twice maximum static pressure and not less than twice differential pressure at shut-off.

.9 accuracy, including non-linearity, hysteresis and non-repeatability: ±0.05% full scale,

.10 operating temperature range; -40°C to 80°C (-40°F to 185°F),

.11 operating humidity range; 0 to 100% relative humidity,

.12 mounting bracket, suitable for pipe mounting,

.13 enclosure;

(a) cast aluminium,

(b) Type 4X to CSA C22.2 No. 94.1 or NEMA,

(c) polyurethane finish paint,

(d) screw terminal connector block.

.5 Differential pressure transmitters for terminal units:

.1 suitable for use in air with pressure independent terminal units (constant volume, variable volume or fan powered),

.2 capacitive sensor technology,

.3 pressure range: 0to 373 Pa (0 to 15 in.w.g.),

.4 linear output proportional to velocity pressure of unit inlet air stream, and suitable as analog input to terminal unit controller,

.5 accuracy including non-linearity, hysteresis, and non-repeatability: ±1% full scale

.6 operating temperature range: 0°C to 50°C (32°F to 122°F)

.7 operating humidity range: 10 to 90%non-condensing

.8 high and low pressure ports, barbed pressure fittings suitable for Ø8 mm (¼ in) tubing for connection to air flow pick up device provided with terminal box,

.9 mounting kit, suitable for installation within terminal unit controller enclosure,

.10 coded screw terminals .

2.10 Carbon Dioxide Transmitters

.1 Carbon dioxide (CO_2) transmitter – spaces/rooms:

.1 dual element, non-dispersive, thermally compensated lithium tantalite infrared detector,

.2 LCD display of ppm level, trip set point and time delay,

.3 LED's indicating normal operation and alarm,

.4 range: 0 to 2000 ppm CO_2 in air,

.5 accuracy: ±40 ppm CO2 + 2% of reading,

.6 drift: less than ±5% full scale over five years without calibration,

.7 repeatability; ±1.0% of full scale

.8 warm-up time: 30 minutes maximum to full specified operation,

.9 response time: less than 60 seconds at minimum of 63% of step change,

.10 operating temperature range; 0°C to 45°C (32°F to 113°F)

.11 operating humidity range; 0 to 85% RH non-condensing,

.12 output signals:

(a) 4-20 mA, 0-5 Vdc or 0-10 Vdc, and

(b) SPST relay, 0.5 A @ 30 VAC, with field adjustable trip point and adjustable time delay for remote alarm.

.13 power supply: 24 VAC/VDC,

.14 enclosure: polycarbonate or PVC, white finish,

.15 warranty: 3 years.

.2 Carbon dioxide (CO_2) transmitter – duct mounted

.1 same as for room type CO2 transmitter and with duct insertion sensor bar,

.2 suitable for duct air velocities up to 15 m/s (3000 fpm).

2.11 Occupancy Sensors

.1 Passive infrared sensor with temperature compensated pyro-electric dual active element,

.1 ceiling or wall mounted,

.2 LED indication light(s),

.3 digital time delay adjustable: from 30 seconds to 30 minutes,

.4 area coverage: 200 m^2 (2000 ft^2),

.5 output: SPDT isolated output relay, rated for 1 A at 24 VDC/VAC,

.6 power supply: 24 VDC,

.7 with 120 VAC/24 VDC transformer power supply unit.

Standard of Acceptance

° Watt Stopper Model CX-100

2.12 Air Flow Measuring Devices

.1 Multiple head pitot tube type stations:

.1 diamond shape cross-section averaging Pitot tube-style sensor with multiple tube structure, averaging chambers and bidirectional flow sensing capability,

.2 sheet metal duct collars,

.3 selected for operating flow range, duct size and air temperature,

.4 integral differential pressure sensor with analog output signal proportional to differential pressure across sensor, 4-20 mA, 0-5 Vdc or 0-10 Vdc,

.5 accuracy: ±1% of actual value,

.6 repeatability: ±0.1% of actual value,

.7 flow turndown: greater than 10:1,

.8 differential pressure range: 0 to 1250 Pa (0 to 5 in wg),

.9 operating pressure: up to 34.3 kPa (5 psig),

.10 operating temperature rating: -4°C to 95°C (-20°F to 200°F),

.11 operating pressure rating: 1725 kPa (250 psig)

.2 Thermal anemometer probe type airflow measuring stations:

.1 sensors mounted in sheet metal duct collars of [aluminum][stainless steel],

.2 each thermistor mounted in solid thermoplastic housing,

.3 probe length equal to greater of two inside dimensions of rectangular and oval ducts and equal to duct diameter for round ducts,

.4 minimum two sensing points per probe,

.5 independent averaging of multiple sensing points,

.6 averaging amplifier with adjustable offset and span for multiple probe applications,

.7 temperature compensated linear analog output signal indicating average velocity at station, 4-20 mA, 0-5 Vdc or 0-10 Vdc,

.8 velocity accuracy: ±2% of reading,

.9 temperature accuracy: 0.10°C (0.18°F),

.10 resolution: 0.4% of scale,

.11 repeatability: ±0.2% of reading,

.12 velocity range; 0 to 25m/s (0 to 5000 fpm),

.13 maximum allowable pressure drop: 1.2 Pa at 10m/s (0.005 in wg at 2000 fpm),

.14 flow station operating temperature range: [0°C to 70°C (30°F to 160°F)][-29°C to 71°C (-20°F to 160°F)],

.15 electronics operating temperature range: 0°C to 70°C (30°F to 160°F),

.16 flow station operating humidity range: 0 to 99% RH non-condensing,

.17 dedicated electronic, solid state digital processing control panel with general purpose NEMA 2 enclosure,

.18 provided with upstream and/or downstream flow conditioning.

.3 Thermal anemometer type airflow measuring stations for installation at fan inlets:

.1 fan inlet bell mouth mounted with adjustable steel strut and mounting feet,

.2 minimum of two flow sensing thermistors and temperature sensors per station, two stations for DWDI fans,

.3 sensors mounted in aluminum casing and recessed within strut,

.4 independent averaging of multiple sensing points,

.5 temperature compensated linear analog output signal indicating average velocity at station, 4-20 mA, 0-5 Vdc or 0-10 Vdc,

.6 velocity accuracy: ±2% of reading,

.7 temperature accuracy: ±0.2°C (0.36°F),

.8 resolution: 0.4% of scale,

.9 repeatability: ±0.2% of reading,

.10 velocity range: 0 to 25m/s (0 to 5000 fpm),

.11 maximum allowable pressure drop: 1.2 Pa at 10m/s (0.005 in.w.c. at 2000 fpm),

.12 flow station operating temperature range: 0°C to 71°C (30°F to 160°F),

.13 electronic operating temperature range: 0°C to 71°C (30°F to 160°F),

.14 flow station operating humidity range: 0 to 99% RH non-condensing,

.15 dedicated electronic, solid state digital processing control panel with general purpose dustproof enclosure.

.4 Provide mounting hardware for installation of airflow measuring stations by sheet metal contractor.

2.13 Air Flow Switches

.1 For indication of air flow within duct.

.2 Differential pressure activated, diaphragm type,

.1 snap-action SPDT switch, 10 A @ 120 VAC,

.2 field adjustable set point,

.3 minimum air velocity: 1 m/2 (200 fpm),

.4 maximum air velocity: 10.2 m/s (2000 fpm),

.5 operating ambient temperature range: 0°C to 40°C (32°F to 104°F),

.6 dustproof enclosure with mounting plate and gasket seal.

2.14 Liquid Flow Switches

.1 For indication of fluid flow in piping systems.

.2 Suitable for use with water, ethylene or propylene glycol, chlorinated or treated water

.1 snap-action SPDT switch, 10 A @ 120 VAC,

.2 operating ambient temperature range; 0°C to 82°C (32°F to 180°F)

.3 operating liquid temperature range: 0°C to 121°C (32°F to 250°F)

.4 general purpose dust proof enclosure for use indoors with fluids at temperature greater than 0°C (32°F)

.5 NEMA 3R vapour tight enclosure for use indoors or outdoors with fluids at temperatures below 0°C (32°F).

2.15 Water Detection Devices

.1 Leak Detection – Tape Type (type “WD1”):

.1 for detection of water included condensate from water vapour,

.2 sensor type: continuous tape 3 mil copper fiber, ¼” gap, with self-adhesive backing,

.3 sensor tape length: based on width of area being monitored,

.4 control type: two (2) relays, trouble and alarm,

.5 local indicator: red alarm pilot light,

.6 relay output rating: 1A @ 24 VAC/VDC, 0.5 A @ 120 VA,

.7 operating temperature: 0 to 70°C (32 to 158°F)

.8 enclosure: cast aluminum, type 4 to CSA C22.2 No. 94.1,

.9 power: 11 – 27 VAC/VDC, with associated 120/24 V power supply unit.

Standard of Acceptance

° Kele - fig. WD-2-T

.2 Leak Detection – Float Level Switch (type “WD2”):

.1 for detection of water included condensate from water vapour,

.2 sensor type: stainless steel float, magnetically-coupled sealed reed-switch,

.3 control type: one (1) SPST switch, 50 VA contact rating,

.4 field-adjustable for normally open or normally closed contacts,

.5 power: 120 – 240 VAC

Standard of Acceptance

° Kele - fig. FS7-SS.

.3 Leak Detection – Spot Leak Detector (type “WD3”)

.1 for detection of water containing mineral content including HVAC water and potable city water,

.2 sensor type:
(a) conductivity sensing probe,
(b) for direct contact to surface with adjustable height between 0 to 4.8mm (0 to 0.19 in.),
.3 control type: one (1) DPST relay,
.4 relay output rating: 1A @ 24 VAC/VDC, 0.5 A @ 120 VA,
.5 operating temperature: 0 to 50°C (32 to 122°F)
.6 enclosure: cast aluminum, type 4 to CSA C22.2 No. 94.1, with mounting flanges to fasten to floor,
.7 power: 24 VAC/VDC, with associated 120/24 V power supply unit.

Standard of Acceptance

° RLE - fig. SD-R01

.4 Leak Detection – Conductivity Cable (Rope) Type Leak Detector:
.1 for detection of water containing mineral content including HVAC water and potable city water,
.2 sensor type: conductivity style detection system consisting of:
(a) detector module,
(b) conductivity sensing cable,
(c) leader cable (as required).
.3 sensor cable: conductivity for detection of water,
.4 control type: two (2) DPST relays, trouble and alarm,
.5 relay output rating: 1A @ 24 VAC/VDC, 0.5A @120 VAC,
.6 local indicator: red alarm pilot light,
.7 operating temperature: 0 to 50°C (32° to 122°F),
.8 enclosure: ABS with hinged and gasket cover Type 3R or 4X to CSA C22.2 No. 94.1,
.9 sensing cable length: as shown,
.10 leader cable: FT-6 Plenum Rated,
.11 power: 12 – 27 VAC/VDC, with associated 120/24 V power supply unit.

Standard of Acceptance

° Greystone - fig. WLDC
° RLE - fig. LD310
° Kele - fig. WD-2PR

2.16 Electric Power Instrumentation

.1 Current sensing relays:
.1 metering transformer ranged to match load being metered,
.2 plug in base and shorting shunt to protect current transformer when relay is removed from socket,
.3 current transformer for single or three phase metering connected into single relay,
.4 adjustable latch level, adjustable delay on latch and minimum differential of 10% of latch setting between latch level and release level,
.5 discrimination between phases in three phase applications to allow worst case selection,
.6 mounted in motor starter enclosure and fed from starter control transformer,

.7 relay contacts capable of handling 10 amps at 240 volts.

.2 Current switches:

.1 self-powered, solid-state type with adjustable trip current,

.2 integral current transformers and relays to indicate motor status,

.3 SPDT output relay suitable for use as digital input to the BAS,

.4 field adjustable output relay trip setting, over 0-100% of range. Deadband adjustment to maximum of 10% of range,

.5 integral zero-leakage LED's indicating sensor power and switch status,

.6 long term setting drift of current transformer and relay combination not more than 5% full range over 6 months,

.7 over current and over voltage protection for current transformer and relay,

.8 operating temperature range; -10°C to 50°C (14°F to 122°F),

.9 operating humidity range; 5% to 90% RH non condensing.

.3 Current transducer:

.1 output signal proportional to measured line current,

.2 output signal in one of following ranges; 4-20 mA, 0-5 Vdc or 0-10 Vdc

.4 AC Current Transmitters:

.1 self-powered, combination split-core current transformer type with built-in rectifier and high-gain servo amplifier with 4-20 mA two-wire output,

.2 full-scale unit ranges of 10 A, 20 A, 50 A, 100 A, 150 A, and 200 A, with internal zero and span adjustment,

.3 accuracy: ±1% full-scale at 500 ohm maximum burden.

.4 UL/CSA listed and meet or exceed ANSI/ISSA 50.1 requirements.

.5 AC Voltage Transmitters:

.1 self-powered single-loop (two-wire) type, 4-20 mA output with zero and span adjustment.

.2 adjustable full-scale unit ranges; 100-130 Vac, 200-250 Vac, 250-330 Vac, and 400-600 Vac.

.3 Accuracy: ±1% full-scale at 500 ohm maximum burden.

.4 UL/CSA listed, 600 Vac rated and conforming to ANSI/ISSA 50.1.

.6 Power Monitors:

.1 three-phase type with three-phase disconnect and shorting switch assembly,

.2 UL listed voltage transformers, and

.3 UL listed split-core current transformers.

.4 selectable output either rate pulse for kWh reading or 4-20 mA for kW reading.

.5 maximum error of ±2% at 1.0 power factor or ±2.5% at 0.5 power factor.

3 EXECUTION

3.1 Instrumentation Installation – General Requirements

.1 Mount instrumentation;

.1 in clean areas wherever possible,

.2 to be accessible to allow for replacement and servicing without interfering with access for adjacent equipment and personnel traffic in surrounding space,

.2 Provide access doors where instrumentation is concealed behind solid surfaces.

.3 In finished spaces and rooms, install room instrumentation on concealed junction boxes;

.1 fully recessed in gypsum board, wood, or similar construction,

.2 fully recessed in new concrete block construction, with conduit run block void spaces,

.3 fully recessed in new poured concrete construction, with conduit and outlet box roughed-in before concrete pour.

.4 surface mounted with exposed conduit on existing concrete block walls and existing poured concrete walls.

.4 In service rooms, loading docks, and parking garages, install room instrumentation on surface mounted junction boxes with exposed surface-mounted conduit.

.5 Rigidly support field mounted instrumentation on pipe stands or channel brackets.

.6 Rigidly support duct mounted instrumentation to side of duct, in a location that will allow full removal of the instrumentation including duct probes.

.7 Orient instrumentation sensing elements to correctly sense measured variable and to be isolated from vibrations and environmental conditions that could affect measurement or calibration.

.8 Identify each cable and wire at every termination point.

.9 Air seal wires attached to sensors at entry into junction box.

3.2 Power and Control Wiring

.1 Provide power and control wiring to each instrument in accordance with the manufacturer requirements and in accordance with specification section 25 05 13.

3.3 Temperature and Humidity Instrumentation

.1 Averaging duct temperature sensors:

.1 Use averaging sensors in the following locations:

(a) mixing plenums in front of the first downstream component,

(b) ducts with cross sectional area greater than 1.5 m^2 (16 sq. ft),

(c) downstream of the supply air leaving side of a thermal heat wheel, located approximately 200 mm (8 in) from leaving face of wheel.

.2 Install averaging sensors in serpentine manner vertically across duct. Support each bend with capillary clip. Provide sensor element length of 3 m per m^2 (1 ft per ft^2) of plenum/duct cross sectional area.

.2 Low-temperature switch:

.1 Install mixing plenum low-limit temperature switches in serpentine manner horizontally across duct. Support each bend with capillary clip. Provide sensor element length of 3 m per 1 m^2 (1 ft per 1 sq. ft) of coil area.

.3 Pipe mounted temperature sensors:

.1 Thermowells to be installed by the trade contractor under the applicable Division of the Work for each piping system. Supply the thermowells to the trade contractor and coordinate with them as to installation location and orientation.

.2 For existing steel piping systems, coordinate with the piping trade contractor to install the thermowells by hot-tapping in accordance with specification section 20 05 26 except where the Owner permits draining of the piping system.

.3 Install pipe-mounted liquid temperature sensors in thermowells with heat-conducting material.

.4 Orientate thermowells and transmitters to be located from the side of the pipe or top of pipe for horizontal piping.

.5 Cut and recover piping insulation to 300 mm (12 in) either side for installation of strap-on temperature sensors. Provide removable insulation box over sensor and patch insulation to match existing.

.4 Space temperature and humidity sensors:

.1 Mount space temperature or combination temperature/humidity sensors / transmitters at 1200 mm (4 ft) above finished floor.

.5 Humidity sensors:

.1 Locate humidity sensors adjacent to temperature sensors except as follows.

.2 Locate humidity sensors in the supply air downstream of a thermal heat wheel in a location that represents the average relative humidity when hand-measured at the upstream face of the next component in the air handling unit.

.6 Outdoor temperature and humidity transmitters:

.1 Install outdoor air combination humidity and temperature transmitters on north facing wall, in a location readily accessible for maintenance access.

3.4 Space Temperature Sensor Selection

.1 Select general purpose space temperature sensor types in accordance with the following table unless otherwise shown on drawings or in control sequences:

Space Types	Temperature Sensor Type
Private offices	TSD/O
Open plan offices	TSD
Meeting rooms, class rooms, private dining rooms, faith congregation spaces, gymnasia	TSD/C/O
Public dining areas, libraries, art galleries	TSD/C
Service rooms, corridors, data centers, distributed electrical and data rooms, janitorial rooms, loading docks, storage rooms	TS
Building entrances, lobbies, elevator lobbies, stairwells	TS
All other spaces not identified above	TS

3.5 Differential Air Static Pressure Sensors

.1 Install duct static pressure sensors rigidly to side of duct to ensure duct prove is at 90° to the direction of airflow.

.2 Supply duct static pressure;

.1 pipe high-pressure tap to duct using pitot tube,

.2 make pressure tap connections according to manufacturer's recommendations.

.3 Return duct static pressure;

.1 pipe high-pressure tap to duct using pitot tube,

.2 make pressure tap connections according to manufacturer's recommendations.

.4 Building static pressure;

.1 pipe pressure sensor's low-pressure port to static pressure port located on outside of building through high-volume accumulator,

.2 pipe high-pressure port to location behind thermostat cover.

.5 Piping to air pressure transducer pressure taps to contain capped test port adjacent to transducer.

.6 Install duct differential pressure sensors across fans, filters and other devices as shown.

.7 Trim impulse lines to use the shortest length while maintaining adequate bending radius without kinking impulse tubes.

.8 Locate air pressure transducers, except those controlling terminal unit boxes;

.1 in control panels, not on monitored equipment or on ductwork,

.2 mount transducers in vibration-free location accessible for service without use of ladders or special equipment.

3.6 Airflow Measuring Stations

.1 Provide transducers, relays, and interconnection wiring to perform Sequences of Operations as detailed and Monitoring in accordance with Controls Schematics.

3.7 Fluid Pressure Switch

.1 Mount pressure switch tees adjacent to fluid pressure gauge taps. Install shut-off valves before tee for water gauges.

.2 Install pressure snubbers on pressure switches at;

.1 suction and discharge sides of oil pumps, and positive displacement pumps,

.2 for compressed air at compressors, dryers and receivers.

.3 Install coil syphons on steam and condensate pressure switches.

3.8 Fluid Pressure Sensors and Transmitters

.1 Provide isolation valve and snubber between pressure sensor/transmitter and pressure source.

.2 Install coil syphons on steam and condensate pressure sensors/transmitters.

.3 Provide two pressure transducers with software calculation at controller for differential pressure measurements in fluid piping systems.

3.9 Flow Switch Installation

.1 Fit correct length paddle for diameter of pipe.

.2 Adjust switch for specified flow condition in accordance with manufacturer's instructions

3.10 Air Quality Instrumentation

.1 Carbon dioxide sensors:

.1 install CO2 sensors at between 900 - 1200 mm above floor level.

.2 Carbon monoxide transmitter:

.1 install CO sensors at 900 - 1200 mm above floor level,

.2 adjust CO alarm setpoints:

(a) warning: 40 ppm

(b) alarm: 70 ppm

.3 Nitrous Dioxide transmitter:

.1 install NO2 sensors at 300 to 450 mm above floor level,

.2 adjust NOx alarm setpoints:

(a) warning: 0.5 ppm

(b) alarm: 1.0 ppm.

3.11 Occupancy Sensors

.1 Install occupancy sensors in ceiling as shown.

3.12 Leak Detection Devices

.1 Provide leak detection devices where shown.

.2 Unless otherwise shown, select leak detection types as follows:

Location	Fluid Detected	Type	Limits
HVAC condensate trays (beneath trays)	Condensate water	WD1	Locate tape beneath and along length of tray overflow
HVAC condensate trays (inside of tray)	Condensed water	WD2	One detector per tray set at highest detection level, to detect water at a depth of 25 mm (1 in.)
Containment trays beneath CRAC, CRAH units	HVAC water (unit leaks)	WD3	Containment area ≤ 1.2 m^2 (12.9 ft^2): two detectors per containment area.
		WD4	Containment area > 1.2 m^2 (12.9 ft^2): Continuous cabke around containment perimeter
HVAC water piping (along length of pipe)	HVAC water (pipe leaks)	WD4	Installed on bottom of pipe underneath insulation.
Raised floors, along path of water piping (beneath piping)	HVAC water (pipe leaks) and condensate water	WD1	Continuous tape applied to floor beneath pipes.
Piping trench	HVAC water, city water, ground water	WD4	Locate cable on side of trench, mounted 12 mm (0.5 in.) above bottom of trench

.3 Install leak detection devices in accordance with manufacturer’s instructions and as follows:

.1 for type WD1 (tape), do not fold, bend or cross the tape over itself,

.2 for type WD2 (float), provide a support bracket to suspend the float to activate at the indicated depth,

.3 for type WD3 (spot), attach the device directly to the floor,

.4 for type WD4 (cable), use plastic clips on 200 mm (8 in.) centres to keep cable straight, without sags or offsets. Route cable at corners using the required minimum bending radius as specified by the manufacturer.

.4 Test each device for operation at indicated water depth. Use water of the type appropriate to the device as follows:

.1 for type WD1 and WD2, use distilled or similar pure (demineralized) water – do not use potable city water,

.2 for type WD3 and WD4, use HVAC or potable city water.

3.13 Safety Controls

.1 Unless otherwise shown, safety devices including smoke detectors, freezestats, low- and high-pressure cut-offs, and other safety switches and controls, are to be hard-wired to de-energize equipment as described in Sequence of Operation.

.2 Provide contacts that allow BAS software to monitor safety control status.

End of Section

Master revised: July 24, 2023

BUILDING AUTOMATION CONTROL VALVES
25 30 19.13

1 GENERAL

1.1 Scope

.1 Provide automatic control valves[.][, other than those valves specified in section 25 30 19.16.]

.2 Provide valve actuators in accordance with specification section 25 30 13.

1.2 Related Sections

.1 Without limiting the scope of work or applicability of other specification sections, the work under this section directly integrates with or refers to the following specification sections:

.1 25 30 13 Building Automation Actuators and Operators

.2 [25 30 19.16 Building Automation Pressure Independent Control Valves][]

1.3 Applicable Codes and Standards

.1 Installation codes and standards:

.1 CSA B51 Boilers, Pressure Vessels, and Pressure Piping Code.

.2 Product standards:

.1 ASME B1.20.1 Pipe Threads, General Purpose, Inch

.2 ASME B16.5 Pipe Flanges and Flanged Fittings

.3 CSA B242 Groove and Shoulder Type Mechanical Pipe Couplings

1.4 Design Criteria

.1 Refer to applicable piping specification sections for piping system design pressure and design temperature.

1.5 Quality Control

.1 Valves to have current Canadian Registration Numbers in accordance with CSA B51.

1.6 Submittals

.1 Shop drawings:

.1 submit product data sheets for materials specified herein,

.2 submit a schedule of control valves, identifying at a minimum the control valve tag, flow rate, pressure drop, Kv (Cv) values, valve body type, valve body pressure rating at design temperature, and CRN number.

2 PRODUCTS

2.1 Control Valves General Requirements

.1 Body and trim materials selected in accordance with specification for globe valves, ball valves, or high performance butterfly valves in applicable piping system valve specifications, and in accordance with manufacturer's recommendations for design conditions and service.

.2 Control valve type selections are shown on drawings, schematics and schedules.

.3 Pipe end connections:

.1 NPS ½ to NPS 2: NPT to ASME B1.20.1.

.2 NPS 2-1/2 and larger: flanged to ASME B16.5, or grooved to CSA.

2.2 Water Solenoid Valves

.1 Refer to piping specification sections for specific-duty solenoid valves.

.2 General duty solenoid valves, NPS 1 and smaller:

.1 Two-port, two position operation,

.2 body: bronze, brass or stainless steel valve with EPDM seals and disc,

.3 for normally closed or normally open operation as shown,

.4 pilot operated electric solenoid with general purpose enclosure and conduit hub,

.5 minimum allowable working pressure: 1035 kPa (150 psig),

.6 minimum operating differential pressure: 820 kPa (120 psi)

.7 minimum design temperature: 93°C (200°F)

.8 manual override operator for normally-closed valves,

.9 pipe ends: ASME B1.20.1 NPT threaded ends,

.10 listed to CSA C22.2 No. 139,

.11 power supply: 24 VAC, 24 VDC or 120 VAC

.3 Valve size: pipeline size.

2.3 Water and Glycol Valves – Two Position, Two- and Three-Way

.1 Valves for two-position service

.1 ON-OFF for two-way valve,

.2 Open port A - Open port B for three-way valve (non-isolation of ports simultaneously).

.2 Valve pattern:

.1 two-way: straight through type, single seated, with replaceable ball, seats and/or disc.

.2 three-way: dual seated for globe valves, three way flow pattern for ball valves,

.3 Valve size: pipeline size.

.4 Valve type selection:

.1 full port ball valves, sizes NPS 2 and smaller,

.2 butterfly valves, sizes NPS 2 and larger.

.5 Valve flow characteristic:

.1 quick opening or linear flow characteristics.

2.4 Water and Glycol Valves – Modulating Two-Way

.1 Valves for two-way modulating service.

.2 Valve pattern: straight through two port type, single seated, with replaceable disc or ball.

.3 Valve type:

.1 globe valves for all flow rates.

.2 characterized ball valves for flow coefficient K_v = 35 (C_v = 40) and smaller,

.3 butterfly valves for flow coefficient greater than K_v = 35 (C_v = 40), based on flow coefficient rating at 70° rotation

.4 Valve size:

.1 size valves based on design flow rates at a pressure drop not greater than the design pressure drop as shown, and not less than 90% of that design pressure drop.

.2 where valve pressure drops are not shown, size valve pressure drop (at design flow) to be the greatest of;

(a) 200% of pressure drop through heat exchanger,

(b) 100% of pressure drop through coil, or

(c) 35 kPa (5 psi).

.3 for terminal box units and duct mounted reheat coils, size valves on a pressure drop of between 20 to 35 kPa (3 to 5 psi).

.5 Valve flow characteristic:

.1 equal percentage flow characteristics for heat transfer coils and heat exchangers,

.2 linear flow characteristic for tank filling operation (water flow discharges to atmosphere).

2.5 Water and Glycol Valves – Modulating Three-Way

.1 Valves for three-way modulating mixing/diverting service:

.2 Valve pattern: three-way type with dual seated for globe valves, three way flow pattern for ball valves,

.3 Valve type:

.1 globe valves for all flow rates,

.2 characterized ball valves for flow coefficient K_v = 35 (C_v = 40) and smaller,

.4 Valve size:

.1 unless otherwise shown, size valve pressure drop (at design flow) to be the smaller of;

(a) twice the pressure drop through coil or heat exchanger, or

(b) 35 kPa (5 psi).

.5 Valve flow characteristic:

.1 linear flow characteristic for each port to give constant total flow, or,

.2 equal percentage flow characteristics with 25% valve authority (valve pressure drop equal to 33% pressure drop through load at full flow).

2.6 Water and Glycol Valve Actuators

.1 Conform to section 25 30 01 and as specified herein.

.2 Actuator and valve trim selected for close-off pressure ratings:

.1 two-way modulating or two position service: 150% of pump shut off head.

.2 three-way modulating service; 300% of pressure differential between ports A and B at design flow or 100% of pump shut off head.

.3 shut off head to be based on maximum pump RPM when pump is controlled with a VFD.

.3 Valve failed position on isolation from control signal:

.1 spring-return or electronically fail safe,

.2 heating terminal/zone valves: normally open,

.3 heating coil valves in AHU; normally open,

.4 heating differential pressure by-pass control valves; normally closed,

.5 chilled water terminal, zone and AHU coil valves; normally closed,

.6 chilled water valves serving process loads: normally open,

.7 chilled water differential pressure by-pass control valves: normally open,

2.7 Steam Valves

.1 Valves for two-way modulating service.

.2 Valve pattern: straight through two port type, single seated, with replaceable disc or ball.

.3 Valve type: globe.

.4 Valve size:

.1 two-position service;

(a) pressure drop at design flow equal to 10%-20% of inlet steam gauge pressure.

.2 modulating service at inlet steam gauge pressure of 100 kPa (15 psig) or less;

(a) pressure drop at design flow equal to 80% of inlet steam gauge pressure.

.3 modulating service at inlet steam gauge pressure of 101-350 kPa (16-50 psig);

(a) pressure drop at design flow equal to critical pressure drop (45% of absolute inlet pressure).

.4 modulating service with inlet steam gauge pressure over 350 kPa (50 psig);

(a) pressure drop as shown.

.5 modulating steam loads greater than 570 kW (2000 lbs/hr) at all pressures;

(a) provide two valves, connected in parallel and controlled in sequence, with first valve in opening sequence sized for 1/3 and second for 2/3 of steam load.

.5 Valve flow characteristic:

.1 equal percentage flow characteristics.

.6 Actuator and trim:

.1 conform to section 25 30 01 and as specified herein.

.2 selected for close-off pressure rating equal to 150% of operating (inlet) pressure.

3 EXECUTION

3.1 General

.1 Select control valves for the applicable flow rates and pressure drops.

3.2 Installation

.1 Supply control valves to the applicable trades contractor for installation. Provide instruction to the trades contractor as to:

.1 any required straight pipe lengths upstream and downstream of the valve,

.2 correct installation orientation including requirements for valve actuator,

.3 for steam systems, location of steam trap drips ahead of the valve on horizontal piping.

3.3 Cleaning

.1 Coordinate with the applicable installation trades contractor to provide protection of the control valve during pipeline cleaning. Ensure control valves are 100% open during pipeline cleaning.

.2 After completion of pipeline cleaning, clean strainers located ahead of control valves.

3.4 Start-Up and Testing

.1 Confirm control valves stroke fully open and fully closed under applied control signal.

.2 Conduct tests at part load < 30% to check for control loop instability; adjust control parameters to eliminate valve hunting under steady part load conditions.

End of Section

Master revised: May 23, 2023

CS100 – VAV Terminal Unit

Reference: Drawing 2/M1-00

Applicable Systems: Terminal unit with reheat and zoned radiant heating (typical)

System Start: Normally open at set point terminal unit boxes are enabled when associated AHU system is operating.

Normal Operation: ***Space Temperature Control***

Boxes are setup as "Variable Volume" with Maximum and Minimum air flow setpoint.

Space temperature T1 sensor modulates supply air damper D1 between maximum and minimum without reheat to maintain space temperature setpoint.

Space temperature setpoint are as follows:

- Summer: 24°C ± 2°C
- Winter: 22°C ± 2°C or as specified in Schedule

Air flow (velocity pressure) sensor F1 modulates supply air damper to maintain air volume independent of system static pressure. Airflow setpoint adjustable from BAS. Minimum airflow setpoint set to 30% unless shown otherwise.

Temperature sensor T2 monitors discharge air temperature from the terminal unit.

Occupancy Control:

On signal from lighting control system that zone associated with terminal unit is unoccupied, override and close damper D1 to minimum position.
On signal that associated zone is occupied remove damper position override, returning to normal operation.

System Stop: On shutdown of associated AHU system, supply air damper of terminal unit boxes goes to normally open setpoint position.

Schedule: As per associated fan schedule.

Alarm: F1 Abnormal terminal unit air flow.

T1 Space temperature out of range – high: 3°C > setpoint; low: 2°C < setpoint

CS101 – VAV Terminal Unit with Reheat

Reference: Drawing 2/M1-00

Applicable Systems: Terminal unit with reheat and zoned radiant heating (typical)

System Start: Normally open at set point terminal unit boxes are enabled when associated AHU system is operating.

Normal Operation: ***Space Temperature Control***

Boxes are setup as "Variable Volume" with Maximum and Minimum air flow setpoint.

Space temperature T1 sensor modulates supply air damper D1 between maximum and minimum without reheat to maintain space temperature setpoint.

If space load decreases below minimum airflow setpoint, maintain minimum airflow and then space temperature sensor modulates Hot Water Reheat Coil Valve V1 to maintain space temperature setpoints as follows:

Space temperature setpoint are as follows:

- Summer: 24°C ± 2°C
- Winter: 22°C ± 2°C or as specified in Schedule

Air flow (velocity pressure) sensor F1 modulates supply air damper to maintain air volume independent of system static pressure. Airflow setpoint adjustable from BAS. Minimum airflow setpoint set to 30% unless shown otherwise.

Temperature sensor T2 monitors discharge air temperature from the terminal unit.

Occupancy Control:

On signal from lighting control system that zone associated with terminal unit is unoccupied, override and close damper D1 to minimum position.
On signal that associated zone is occupied remove damper position override, returning to normal operation.

System Stop: On shutdown of associated AHU system, supply air damper of terminal unit boxes goes to normally open setpoint position. Hot water valve V1 on reheat coil shall maintain the position when system stops.

Schedule: As per associated fan schedule.

Alarm: F1 Abnormal terminal unit air flow.

T1 Space temperature out of range – high: 3°C > setpoint; low: 2°C < setpoint

LIST OF SECTIONS – ELECTRICAL AND SECURITY
26 00 01

DIVISION 26 – ELECTRICAL

Spec Number	Spec Title	Status	No. Pages
26 01 01	Electrical General Requirements	Issued For Permit /Tender	
26 01 02	Qualifications and Authorities - Ontario	Issued For Permit /Tender	
26 05 01	Electrical Basic Materials and Methods	Issued For Permit /Tender	
26 05 19	Low-Voltage Electrical Power Conductors	Issued For Permit /Tender	
26 05 32	Splitters; Junction and Pull Boxes; Cabinets	Issued For Permit /Tender	
26 05 33	Conduits; Fastenings and Fittings	Issued For Permit /Tender	
26 05 35	Outlet Boxes; Conduit Boxes and Fittings	Issued For Permit /Tender	
26 07 13	Wiring to Owners Equipment	Issued For Permit /Tender	
26 27 26	Wiring Devices	Issued For Permit /Tender	
26 27 28	Wire and Box Connectors 0-1000 V	Issued For Permit /Tender	
26 28 16.13	Molded Case Circuit Breakers	Issued For Permit /Tender	
26 50 00	Lighting	Issued For Permit /Tender	

DIVISION 28 – ELECTRONIC SAFETY AND SECURITY

28 46 11	Fire Alarm System Initiating and Input Devices	Issued For Permit /Tender	
28 46 21.11	Addressable Fire Alarm System	Issued For Permit /Tender	
28 46 23	Fire Alarm Notification and Output Devices	Issued For Permit /Tender	
28 46 90	Fire Alarm System Sequence of Operation	Issued For Permit /Tender	

END OF SECTION

ELECTRICAL GENERAL REQUIREMENTS
26 01 01

1 GENERAL

1.1 General Contract Documents

.1 Comply with General Conditions of the Contract, Supplementary Conditions of the Contract and Division 01 - General Requirements.

.2 Where content in this Specification section duplicates requirements in various Division 01 Specification sections, this section and the applicable Division 01 sections are to be read together and the most stringent requirements apply.

1.2 Work Included

.1 Work to be done under Divisions 26, 27 and 28 to include furnishing of labour, materials, equipment and services required for installation, testing and putting into proper operation complete electrical systems as shown, as specified, as intended, and as otherwise required. Complete systems to be left ready for continuous and efficient satisfactory operation.

.2 Read drawings and specifications together as a whole and in conjunction with other such documents included under the Construction Contract.

1.3 Document Organization

.1 Applicable Divisions for Electrical Work:

.1 Division 26 - Electrical

.2 Division 27 - Communications

.3 Division 28 - Electronic Safety and Security

.2 For clarity, any reference in the Contract Documents to Division 26 includes Division 27 and 28.

.3 The Specifications for these Divisions are arranged in Sections for convenience. It is not intended to recognize, set or define limits to any subcontract or to restrict Contractor in letting subcontracts.

.4 Contractor is responsible for completion of the Work whether or not portions are sublet.

1.4 Division 26, as it Applies to Division 27 and 28

.1 Division 26 contains common work requirements that are applicable as necessary to the Work of Divisions 27 and 28 and apply as if written in full within those Divisions.

1.5 Language

.1 Specifications are written as a series of instructions addressed to the Contractor, and by implication to subcontractors and to suppliers. For clarity and brevity, use is made of numbered lists and bulleted lists. Where the list follows a semi-colon (;) punctuation is for clarity, where the list follows a colon (:) punctuation is to be read as short-hand form of verb “to be” or “to have” as context requires.

.2 It is not intended to debate with the Contractor reasons for these instructions, and words associated with justification for an instruction or restatement of anticipated performance have been omitted to avoid possible ambiguities.

1.6 Definitions and Abbreviations

.1 Other specification sections of Divisions 26 to 28 of the Work may also include additional specific definitions and/or abbreviations that apply to that specification section.

.2 The following terms apply to Divisions 26 to 28 of the Work:

.1 The words "indicated", "shown", "noted", "listed" or similar words or phrases used in these Specifications, mean that the material or item referred to is "indicated", "shown", "listed" or "noted" on the Drawings or in the Specifications.

.2 Wherever the word “listed” is used in conjunction with a product and a product certification standard (including but not limited to CSA, ULC, CGSB, BNQ, UL), it shall be understood to mean that the product is “listed” by an accredited 3rd party testing laboratory as being certified to the referenced product standard.

.3 Wherever the words “approved”, or similar words or phrases are used in the Specification they shall be understood, unless the context otherwise provides to mean that material or item referred to shall be “approved by” the Owner.

.4 Wherever the words “satisfactory”, “as directed”, “submit”, “permitted”, “reviewed”, or similar words or phrases are used in the Specification they shall be understood, unless the context otherwise provides to mean that material or item referred to shall be “satisfactory to”, “as directed by”, “submitted to”, “permitted by”, or “reviewed by” the Consultant.

.5 Instructions using any form of the word:

(a) “install” means to place in position for service or use.

(b) “supply” means to procure and deliver materials, or to make available labour or services for the stated purpose.

(c) "provide" means to supply material, labour and services to install the referenced item.

.6 The term “building code” means the edition of the applicable building code at the location of the Work at the time of obtaining a building permit.

.7 The terms “electrical code” and “electrical safety code” mean the edition of the applicable electrical safety code adopted by regulation at the location of the Work at the time of obtaining an electrical works permit.

.8 The term “AHJ” and “local authority” means the “Authority Having Jurisdiction” and can include the local building inspector, the local fire department and the electrical safety inspector or their agents.

.9 Wherever manufacturers or manufacturer’s products are identified in lists under the phrase "Standard of Acceptance", these are manufacturers and/or products which meet the project standards in regard to performance, quality of material and workmanship.

.3 The following abbreviations apply to this specification section:

.1 NECA – National Electrical Contractors Association

1.7 Examination

.1 Examine any existing buildings and services, local conditions, building site, Specifications, and Drawings and report any condition, defect or interference that would prevent execution of the Work.

.2 No allowance will be made for any expense incurred through failure to make these examinations of the site and documents prior to Tender or on account of any conditions on site or any growth or item existing there which was visible or known to exist at time of Tender.

.3 Before commencing work under this Division, examine the work of other Divisions of the Work and report any defect or interference.

1.8 Design Services

.1 Provide specialty design services for elements of the Work where specified in other sections of Division 26. Drawing and specifications prepared by such specialty design service providers shall be sealed by a professional engineer licensed in the jurisdiction of the Work.

1.9 Product Substitutions

.1 The use of a substitute article or material which the manufacturer represents to be of at least equal quality and of the required characteristics for the purpose intended may be permitted, subject to the following provisions;

.1 a substitution will not be considered for reasons of meeting the construction schedule unless the Contractor can demonstrate to the satisfaction of the Consultant that all reasonable efforts have been made to procure the specified product or material in a timely fashion,

.2 the manufacturer to advise the Consultant of the intention to use an alternative article or material before doing so,

.3 the burden of proof as to the quality and suitability of alternatives to be upon the manufacturer, the manufacturer to supply all information necessary, as required by the Consultant, at no additional costs to the contract,

.4 the Consultant to be the sole judge as to the quality and suitability of alternative materials and the Consultant's decision to be final,

.5 where use of an alternative material involves redesign or changes to other parts of the Work, the costs and the time required to affect such redesign or changes will be considered in evaluating the suitability of the alternative materials,

.6 no test or action relating to the approval of substitute materials is to be made until the request for substitution has been made in writing by the manufacturer and has been accompanied by complete data as to the quality of the materials proposed, such request to be made in ample time to permit appropriate review without delaying the Work, taking into consideration that such a substitution request may be rejected requiring that the product or material as originally specified be provided,

.7 whenever classification, listing, or other certification by a recognized standards body is a part of the specifications for any material, proposals for use of substitute materials is to be accompanied by reports from the equivalent body indicating compliance with the requirements of the specifications,

.8 the costs of testing required to prove equality of the material proposed to be borne by the manufacturer.

2 SHIPPING, HANDLING AND STORAGE

2.1 Shipping

.1 Provide adequate protection of equipment during shipping and handling to provide equipment at the site in ex-works condition when handled by commercial carrier systems.

.2 Each drawout element such as high voltage circuit breakers, power circuit breakers, transfer switch modules, etc. to be packaged separately from its associated enclosure.

.3 Any component packaged or shipped separately to be individually crated and tagged with unit number and the equipment number of the assembly to which it belongs.

.4 Provide each "shipping section" with a permanently-attached, readily-visible identification tag bearing the equipment number of the assembly of which it is a part.

2.2 Storage

.1 Store equipment and materials at the worksite to protect them from any damage until placed into its final location. Maintain similar protection of installed equipment and materials to protect against damage until they are turned over to the Owner. Make good any damage to equipment or materials up to the time of ready for takeover

.2 Store electrical materials and equipment such as switchboards, panels, transformers, bus ducts, fire alarm devices, luminaires, etc., in a dry, clean location and cover with polyethylene plastic to preserve factory finish.

.3 Protect exposed or free standing equipment with plastic to minimize entry of dust and dirt and marring of finished surfaces during progress of work.

.4 Schedule luminaires, lamps, diffusers and fire detectors for installation as late as possible during construction in order to minimize accumulation of dust and/or dirt on them. Clean luminaires and diffusers, not acceptable because of dust and dirt, in an approved manner in accordance with the manufacturer's instructions. Wrap surface mounted and suspended luminaires and fire detectors, installed prior to painting or dusty construction being completed in the area, in plastic to prevent dirt or paint from settling on them.

.5 Wrap bus ducts in heavy gauge plastic to adequately prevent moisture and dirt from entering bus duct. Wrapping to remain until bus ducts are ready to be energized.

.6 Provide adequate ventilation and temporary heating to prevent condensation of moisture within the enclosed equipment.

2.3 Provisions for Handling and Field Erection

.1 For equipment that will require hoisting on site, provide removable side panels, lifting angles or lifting plates to accommodate the use of slings or crane hooks, for each shipping section.

.2 For floor mounted equipment, provide on each shipping section, removable steel channel base plates to permit use of pipe rollers or dollies without damaging the equipment.

3 OWNER'S SPECIAL REQUIREMENTS FOR EXISTING SITES

.1 The following special requirements are in addition to the requirements of Division 01 of the Work.

.2 Provide a written list of names of employees and sub-trades employees entering the building, advising which areas they need access to at least 48 hours prior to expected time of arrival. This lead time is required to prearrange security passes.

.3 Security passes to be visibly worn at all times by all employees.

.4 Trades people to strictly adhere to Owner's building security procedures otherwise entrance into the building will be denied.

.5 Trades people are to enter via the entrance identified by the Owner.

.6 Park vehicles in designated areas. Do not block driveways.

.7 Use only the freight elevator to transport tools and material. Freight elevator door to be shut immediately after exiting the cab.

.8 Do not disable or activate any electrical or mechanical system without prior approval by the Owner's Project Manager. Also, prior to disabling or activation of any electrical or mechanical system, obtain approval from Building Operations and Building Security.

.9 Submit prior notification to Building Security Staff before any construction activity commences which will result in heat, smoke, dust or fumes, such as welding, saw cutting, soldering, spray painting, which might affect sensitive fire detection and protection equipment.

.10 Submit notifications sufficiently in advance such that the Owner will have at least 48 hours to make the necessary arrangements should Building Operations deem that work on a particular system requires a security escort. A security escort will be required for any work being done in secured areas, e.g. tenant space

.11 Provide at least 48 hours prior notification to Building Operations for any fire system isolation requests.

.12 Schedule work and meet with sub-trades daily on site, to show trades people the work areas and work to be done.

.13 Trades-people are to supply and use their own tools. No tools, ladders or equipment, etc. will be loaned by the Owner.

.14 Provide environmental cleaning of the job site daily during construction and upon completion. This includes above ceiling. Do not store materials or garbage on the loading dock.

.15 Provide special care, attention and protection when transporting equipment and materials to prevent accidental damage to fire protection equipment, finishes, furnishings and fixtures.

.16 "No Smoking" – this is a smoke-free building. Violators will be asked to leave and may be denied reentry. Smoking is not allowed on the roof.

.17 A security escort will be required for any work being done in secured areas, e.g. raised floor, computer room and mechanical/electrical rooms.

.18 If Building Operations deems that work on a particular system requires security escort, allow 48 hours to make appropriate arrangements.

.19 For any open flame work, a fire extinguisher and security fire watch is required, and will be provided and paid for by the Owner. Provide 48 hours prior notice to allow the Owner to make the necessary arrangements.

.20 Obtain the approval of the Building Manager for the storage of materials on site.

.21 Perform a daily cleanup prior to leaving the site.

.22 Secure oxygen and acetylene cylinders at all times and capped nightly.

.23 Restore operating and redundant systems to their normal condition at the end of each work day.

.24 At the conclusion of each work day, the Contractor's superintendent/supervisor is to advise the Building Manager on the day's activities and plans for the next day's work.

4 PROGRESS PAYMENT PROCEDURE

4.1 Schedule of Values

.1 Provide schedule(s) of values for progress payments in accordance with this part.

.2 Prepare and submit a schedule of values ("SOV") for the Division 26 Work.

.3 Each SOV is to be in the sample format shown in Article "Attachments", specifically that the SOV is to include four sections for:

.1 Contract price work element breakdown, which includes:

(a) detailed breakdown by work element as agreed with the Consultant,

(b) line items for coordination drawings, as-built documents and operating manuals,

(c) a summary line item for authorized Cash Allowance disbursements (if applicable),

(d) line items for each Itemized Price (if applicable),

(e) line items for each Separate Price (if applicable and included in the Contract Price)

(f) a line item for the total of the original contract work element values,

(g) a summary line item for approved change instructions,

.2 Cash Allowance disbursement authorization, with separate work elements for each cash allowance,

.3 Approved Change Instructions, with separate work elements for each change instruction,

.4 Outstanding Change Instructions which are either not quoted or not yet approved.

.4 Each work element in the SOV sections (except Outstanding Change Instructions) is to include:

.1 the original contract value and the percent of original contract total value (Contract Price section only),

.2 the completed to date amount and percent of original work element contract value,

.3 the previously billed amount and percent of original work element contract value,

.4 the current billing (payment request) amount and percent of original work element contract value, and

.5 the balance to complete amount and percentage of original work element contract value.

.5 The required Contract Price work element breakdown will be determined by the Consultant, with the level of breakdown appropriate to the project such as

.1 by trade,

.2 by specification section or portion thereof,

.3 by labour vs material,

.4 by location in the building,

.5 or any combination of the above.

.6 Submit a draft SOV for review and approval by the Consultant at least three weeks before the first request for progress payment. Do not submit requests for progress payments until the SOV has been reviewed and there are no outstanding comments from the Consultant.

.7 Make requests for progress payments using the values on the reviewed SOV.

.8 When a change in the Work has been approved by the Owner, include the approved changes on the SOV for the next payment application, whether or not payment is requested in full or in part for that change in that payment request period.

5 CONSTRUCTION CHANGES

5.1 General

.1 The valuation method to be used for a change instruction to the Work is to be determined by the Consultant from the following methods:

.1 by labour and material when the change instruction is by a Change Directive;

.2 by unit prices set out in the Contract or subsequently agreed upon for other change instructions;

.3 by a detailed quotation for other change instructions; or

.4 by a Cash Allowance Disbursement instruction.

5.2 Definitions

.1 The following definitions apply to this section

.1 ***RS Means manual*** – the trade pricing reference book published by Cordian Group Inc. that is applicable to the jurisdiction of the project.

.1 ***Base wage rate*** – the hourly rate actually paid to the trades person, determined in accordance with applicable collective bargaining agreement, or in their absence the actual gross wages paid to the worker.

.2 ***Job Site Impact Multiplier*** – a multiplier expressed as a decimal number that is included in the Labour Rate to account for special job site conditions that affect labour availability, labour productivity, procurement of materials, and materials management, that are specific to the project and site conditions.

.3 ***Indirect labour –*** any labour that is neither journeyperson labour that directly performs the work nor labour that directly supervises journeyperson(s).

.4 ***Labour Rate*** – the actual fully burdened labour cost per hour of labour consumed by a trades person including statutory and regulatory burden, collective bargaining burden, and other project related burden. For greater clarity, the labour rate includes but is not limited to the following:

(a) base wage rate,

(b) vacation and statutory holiday pay,

(c) union deductions and additional union charges,

(d) Legislated burdens including EHT, WSIB, EI, CPP, RST on H/W

(e) wage-based taxes,

(f) job site impact multipliers,

(g) expendable small tools charge,

(h) project insurance,

(i) financing of payroll,

(j) estimating,

(k) rest breaks and idle time,

(l) safety including training, safety meetings, WHMIS, fall protection, personnel protection equipment, and safety committees,

(m) preparation and handling of shop drawings and other submittals,

(n) preparation of as-built documents, including operation and maintenance manuals,

(o) labour warranties,

(p) site facilities,

(q) clean-up,

(r) parking.

.5 ***Foreperson*** – a first level supervisory position having direct control over the work performed by journeypersons.

.6 ***Journeyperson*** – *a person working in a skilled construction trade which may be prescribed by regulation, and includes apprentices.*

.7 ***Labour Unit*** – the number of journeyperson labour hours or part thereof, required to perform a specific construction task, and includes but is not limited to:

(a) receiving, unloading, stockpiling, distribution and handling of materials and equipment,

(b) rigging or erecting of materials or equipment,

(c) fitting and joining of materials,

(d) pressure testing of piping and ductwork systems,

(e) testing of equipment and systems,

(f) electrical labour productivity factors in accordance with NECA.

.8 ***Line materials*** – components that make up a distribution network for fluid, power, or electronic/digital information, and includes:

(a) piping, pipe fittings, valves (of all kinds), pipe strainers and other pipe mounted equipment,

(b) ducting, duct fittings, duct balancing dampers and other duct mounted equipment,

(c) conduit, cable tray, cable, conductors, and wiring,

(d) supports, hangers and restraints,

(e) vibration isolators and seismic restraints associated with line materials,

(f) instrumentation including gauges and sensors/transmitters,

(g) electrical, pneumatic, and hydraulic actuators for valves and dampers, and

(h) any coatings or other protective elements applied thereto including insulation and painting.

.9 ***NECA manual*** – the trade pricing reference book published by the National Electrical Contractors Association.

.1 ***Overhead*** – administrative expenses of the Contractor's business and the project which are not included in a Labour Rate or Labour Unit. For greater clarity, overhead includes but is not limited to the following:

(a) company office, storage, and fabrication spaces, and associated maintenance, utilities, and expenses,

(b) project site office, fabrication and storage spaces, washrooms, break rooms, and associated maintenance, utilities, and expenses,

(c) company office equipment, furniture and supplies,

(d) project site office equipment, furniture and supplies,

(e) labour time for project managers and project assistants,

(f) project site security,

(g) project site clean-up, recycling and waste disposal,

(h) materials management,

(i) property taxes, business licenses, and auto insurance,

(j) dues and subscriptions,

(k) postage and courier,

(l) advertising, telephone, IT services and equipment,

(m) legal and accounting fees and expenses,

(n) sales and marketing,

(o) salaries and benefits for company indirect labour including company management, sales force, dispatchers, estimators, clerical staff, and at-office general (non-trades) labour.

(p) all other indirect labour.

.2 ***Senior Foreperson*** – the second (and subsequent) level supervisory position having direct control over one or more Forepersons, where the number of Forepersons supervised is in accordance with local regulatory requirements or collective bargaining agreements. ("Superintendent" or "Supervisor" has the same meaning.

5.3 Change Directive Method

.1 Except where otherwise determined in the Construction Contract or Division 01 specification, the valuation of changes by the Change Directive method shall comply with the following:

.1 the form of presentation of costs and methods of measurement shall be agreed to by Consultant and Contractor before proceeding with the change,

.2 the adjustment in the Contract Price for a change carried out by way of Change Directive shall be determined on the basis of the cost of the Contractor's actual expenditures and savings attributed to the Change Directive. For clarity and by example, savings for deductions of similar materials, equipment, labour or services shall be valued at the same amount as for expenditures for additions of same.

.3 labour costs will be determined based on actual time spent and the agreed labour rate, the actual cost of installed line materials and equipment, and the agreed fee for overhead and profit,

.4 if the change results in a net decrease in Contract cost, the contract price will be decreased by the net decrease in the cost, without adjustment for the Contractor's percentage fee for overhead and profit,

.5 the Contractor shall keep accurate records, in an agreed upon form, of time, quantities and invoiced costs and present an account of the cost of the change in the Work, together with vouchers, material receipts and invoices,

.6 this time and material method shall be used until such time as a total cost estimate of the change is agreed between the Owner and the Contractor, at which time all payments made under this time and material method will be credited against the agreed total cost for the change.

5.4 Unit Price Method

.1 Costing of changes by the Unit Price method:

.1 Costs for work identified by agreed unit costs shall be charged at those rates, unless the Owner agrees to other rates.

5.5 Proposed Changes; Other Change Instructions Method

.1 For proposed changes to the Work or other similar instructions, submit a detailed quotation for approval.

.2 The adjustment in the Contract Price for a change carried out by way of proposed change or other similar instruction shall be determined on the basis of the cost of the Contractor's actual expenditures and savings attributed to the Proposed Change. For clarity and by example, savings for deductions of similar materials, equipment, labour or services shall be valued at the same amount as for expenditures for additions of same.

.3 Costs are to be approved by the Owner before the proposed change to the Work proceeds. The quotation for the change to the Work is to include a summary of charges made up of three components: labour charges, material costs and fees.

.4 Labour Charges:

.1 The labour unit hour estimates are to be based on the current RS Means estimating manual or NECA manual unless otherwise agreed by the Consultant;

.2 The labour cost is to be determined using the agreed labour rates.

.3 Labour rates for Foreperson and Senior Foreperson shall be as per agreement, or in absence of such agreement shall be 1.15 times the journeyperson labour rate. The maximum allowable labour hours for supervision are not to exceed:

(a) for a Foreperson, a maximum of 10% of the total calculated journeyperson hours on a change, and

(b) for a Senior Foreperson of all levels, a maximum combined amount of 3% of the total calculated journeyperson hours on a change.

(c) no other supervisory hours will be permitted.

.5 Material Charges:

.1 Material costs for line materials and installed equipment are to be net of trade discounts. The discount to be applied to list prices for items included in RS Means manual or NECA manual shall not be less than:

(a) 20% for line materials, and

(b) 10% for equipment that is not line material.

.6 Fees:

.1 The Contractor and any sub-contractor is allowed a combined overhead and profit fee of 15% for work to be performed by their own forces,

.2 The Contractor and any sub-contractor is allowed a combined overhead and profit fee of 5% for work performed by a sub-contractor (in the case of the Contractor) or a sub-sub-contractor (in the case of work performed for a sub-contractor),

.3 For clarity, the allowable fees on direct work and on sub-contracted work apply to a sub-sub-contractor of any tier.]

5.6 Cash Allowances; Contingency Allowances

.1 Instructions for changes to the Work to be performed under a cash allowance or contingency allowance ("Allowance") included in the contract price shall be authorized by a Cash Allowance Disbursement instruction.

.2 Except as described below, the determination of costs for Work performed under an Allowance shall be in accordance with the procedure for proposed changes unless otherwise instructed to proceed with the work, in which case the cost of such work shall be valued in accordance with the procedures for Change Directive.

.3 The contract price, not the Allowance, includes the overhead and profit fee for the value of the Allowance.

.4 Except where otherwise specified in the Construction Contract, where the cost of the Work performed under a Cash Allowance Authorization;

.1 is less than the Allowance value, the contract price includes the overhead and profit for the contractor and any sub-contractors. A change order will be issued for a credit for the balance of the Allowance, but shall not include the associated overhead and profit fee.

.2 exceeds the Allowance value, a Change Order will be issued for the amount in excess of the Allowance, and the excess amount is to include the agree fee for overheat and profit.]

6 SUBMITTALS

6.1 Shop Drawings and Product Data

.1 Submit shop drawings, manufacturers and product data and samples in accordance with the requirements of Specification sections of Division 01, this Part, and as further required in other specification Sections of Division 26.

.2 Submit for each item of equipment.

.3 Submit shop drawings in the same unit of measure as used on the drawings. Both metric and U.S. customary measures may be included.

.4 Submit shop drawings by email to: shopdrawings@hhangus.com , except where a project document management web-service is used.

.5 Include an H.H. Angus shop drawing cover sheet form prepared for this project, for each shop drawing submittal (refer to part "Attachment" for an example of this form), or, include the same information on the contractors submittal cover sheet:

.1 Provide the following information on each submission;

(a) Client/Architect name,

(b) Project Name,

(c) H.H. Angus project number,

(d) Date,

(e) Contractor name,

(f) Contractor reference No.,

(g) Manufacturer name,

(h) Product type,

(i) Specification section number,

(j) Contractor trade category: architectural, structural, conveying equipment, user equipment, mechanical, electrical, telecommunications, civil or other.

(k) If a re-submission, the Consultant's previous submittal reference number.

.6 Submit shop drawings in PDF format except as follows;

.1 if the Consultant agrees to a shop drawing to be submitted in hardcopy format, submit in 11 x 17, black and white originals of graphic quality suitable for photocopying and digital scanning. Allow one additional week for processing of shop drawings submitted in hardcopy format.

.7 Manufacturers' printed product data sheets for standard items are acceptable in place of shop drawings provided that physical characteristics are identified and are related to specification references.

.8 Submit manufacturers' data sheets with typed schedules listing manufacturers' and suppliers' name and catalogue model numbers for such items as fire alarm system components, etc.

.9 For luminaires, submit bound sets of luminaire fixture sheets with manufacturers' names and catalogue numbers for all luminaires to be used on the project. Identify and arrange the luminaire fixture sheets and catalogue numbers in the same sequence as the Specification Luminaire List.

.10 Shop drawings and/or product data sheets to show;

.1 CSA or equivalent approval,

.2 dimensioned outlines of equipment and construction details,

.3 equipment weights and center of gravity,

.4 performance ratings,

.5 dimensioned details showing service connection points,

.6 general routing of bus ducts and connecting services,

.7 mounting and fixing arrangements,

.8 operating and maintenance clearances,

.9 access door swing spaces,

.11 Where applicable, include;

.1 wiring, single line and schematic diagrams,

.2 diagrams showing interconnection with work of other Sections,

.3 elevations illustrating locations of visible equipment such as pilot lights, breakers and their trip settings, windows, meters, and access doors,

.4 component assemblies,

.5 trip settings,

.6 description of operation.

.12 Check and stamp each shop drawing as being correct before submission. Shop drawings without such stamps will be rejected and returned.

.13 Keep one copy of each reviewed shop drawing and product data sheet on site and have them available for reference purposes.

.14 Where equipment is delivered without reviewed shop drawings, equipment will be condemned and is to be removed from site and replaced with new equipment after shop drawings have been submitted and reviewed.

6.2 Coordination, Fabrication, or Installation Drawings

.1 Contractor's coordination, fabrication, installation, and/or sleeving drawings will not be reviewed as shop drawings. If submitted as a shop drawing, a transmittal will be returned identifying that the submitted drawings have not been reviewed as a shop drawing.

.2 Maintain a copy on site of such drawings for reference by the Consultant.

.3 The Consultant reserves the right to request selected Contractor's coordination, fabrication, or installation drawings for review.

6.3 Effect of Consultants Review of Submittals

.1 Consultant's review of shop drawings is performed on a sampling basis only, to confirm to Consultant's satisfaction that the Contractor understands the Work to be performed and is interpreting the design documents correctly, and such reviews are performed for the benefit of the Owner.

.2 For greater certainty, the review of shop drawings by Consultant does not constitute a quality control function for the benefit of Contractor, nor does such a review relieve Contractor of their responsibility for complying with the Contract documents.

7 APPLICABLE CODES AND STANDARDS; PERMITS

7.1 Codes, Standards and Regulations

.1 Where a published product standard or installation code is adopted by statute or regulation by an applicable AHJ, the applicable edition of the standard or code is the one that has been adopted

.1 at the time of obtaining a permit for the applicable portion of the Work, or

.2 in the absence of a requirement for a permit, the start date of construction.

.2 Where a published product standard or installation code is not adopted by statute or regulation, then the most current edition of that standard or code at the start date of construction applies.

.3 Install electrical systems in accordance with the electrical safety code adopted by the AHJ responsible for electrical safety at the location of the Work.

.4 Install underground systems in accordance with the latest edition of CSA C22.3 No.7 *Underground Systems* except where specified otherwise.

.5 Comply with CSA Certification Standards and safety bulletins issued by the AHJ for electrical safety applicable to the place of the Work

.6 Where requirements of this specification exceed those of the above mentioned codes, standards, bulletins, this specification is to govern.

.7 In the event of a conflict between codes, bulletins, regulations, or standards, or where work shown is in conflict with these documents, obtain interpretation before proceeding. Failure to clarify any ambiguity will result in an interpretation requiring the application of the most demanding requirements.

7.2 Confined Spaces

.1 Unless otherwise prescribed by the Constructor's/Owner's workplace safety program, treat spaces not designed and constructed for continuous human occupancy as "confined spaces" in accordance with applicable health and safety legislation, including but not limited to;

.1 horizontal and vertical service spaces, shafts, and tunnels,

.2 inside of equipment which permits entry of the head and/or whole body, and

.3 ceiling spaces which are identified as containing a hazardous substance.

7.3 Permits, Fees and Inspections

.1 Submit to the AHJ for electrical safety the necessary number of drawings and specifications for examination and approval prior to commencement of work.

.2 Arrange and pay for permits, tests, and Certificates of Inspection required by the AHJ for electrical safety.

.3 Consultant will provide drawings and specifications required by the AHJ for electrical safety at no cost.

.4 Notify Consultant of changes required by the AHJ for electrical safety prior to making changes.

.5 Furnish to Consultant, Certificates of Acceptance from the AHJ for electrical safety upon completion of the Work.

8 COMMON PRODUCT REQUIREMENTS

8.1 Standard of Material and Equipment

.1 Provide materials and equipment in accordance with This Division.

.2 Materials and equipment:

.1 new and of uniform pattern throughout the Work,

.2 of Canadian manufacture where obtainable,

.3 standard products of approved manufacture,

.4 labelled or listed (certified) to applicable standards in accordance with specification sections of the Work and as required by the AHJ for electrical safety; where there is no alternative to supplying equipment which is not certified, obtain special approval from the AHJ for electrical safety.

.5 in compliance with Standards and Regulations with respect to;

(a) chemical and physical properties of materials,

(b) design,

(c) performance characteristics, and

(d) methods of construction and installation,

.6 identical units of equipment to be of same manufacture within any unit of equipment,

.7 identical component parts to be of same manufacture, but various component parts comprising the unit need not be from one manufacturer.

.3 Materials and equipment are described to establish standards of construction and workmanship. Where manufacturers and/or products are listed under “Standard of Acceptance”, select manufacturers and or products from these lists. Use of manufacturers or products other than as listed are subject to specification requirements concerning requests for substitution.

.4 Include items of material and equipment not specifically noted on Drawings or mentioned in Specifications but which are required to make a complete and operating system.

.5 Confirm capacity or ratings of equipment being provided, when based on ratings of equipment being provided under other trade Sections, before such items are purchased.

.6 Provide equipment marked for use with 75°C wiring or with a higher temperature rating. If equipment is not marked with a temperature rating or if the only rating available is less than 75°C, increase the associated conductor sizes accordingly, to the satisfaction of the consultant.

.7 Factory fabricate control panels and component assemblies are to be listed for electrical safety requirements.

.8 Select materials and equipment in accordance with manufacturer's recommendations and these Specifications, and install in accordance with manufacturer's instructions and these Specifications,

.9 Materials and equipment not satisfying these selection criteria will be condemned. Remove condemned materials from job site and provide properly selected and approved materials.

8.2 Voltage Ratings

.1 Operating voltages: to latest edition of CAN3-C235.

.2 Motors, electric heating, control and distribution devices and equipment to operate satisfactorily at 60 Hz within normal operating limits established by above standard. Equipment to operate in extreme operating conditions established in above standard without damage to equipment.

8.3 Manufacturers Nameplates

.1 Provide manufactured equipment with metal nameplate with raised or recessed lettering, mounted on each piece of equipment.

.2 Manufacturer's nameplate to indicate equipment size, capacity, model designation, manufacturer's name, serial number, voltage, cycle, phase and power rating, and approval listings.

.3 Certified products are to clearly show the mark of the certification agency when in the final installed state.

8.4 Finishes

.1 Primary and final painting for Work, other than items specified as factory primed or finished, to be done under Finish Division 9.

.2 Shop finish metal enclosure surfaces by application of rust resistant primer inside and outside, and at least two coats of finish enamel.

.3 Touch-up factory painted prime and/or final coats damaged during construction, with colour matching paint recommended by the equipment manufacturer.

.4 Leave a quart can or a pressurized spray can of paint, as used with switchboards, with Owner for touch-up purposes.

.5 Clean and prime exposed non-galvanized hangers, racks and fastenings to prevent rusting.

8.5 Provision for Future

.1 Where space is indicated as reserved for future equipment or for future extension to building, leave such space clear and install piping, raceways and equipment so that connections can be made to future apparatus or building.

.2 Identify provisions and service terminations for future on Record Drawings.

8.6 Pre-purchased Equipment; Damage and Ownership

.1 At time of receipt of pre-purchased or pre-tendered equipment at the job site by the installing electrical contractor, provide the services of the manufacturer/distributor/supplier’s technical representative to:

.1 inspect the equipment prior to unloading,

.2 witness the unloading and advise the contractor on the appropriate method for handling the equipment in order to avoid damage during the unloading, moving and setting in place phase of the equipment, and

.3 report any damage to the Consultant.

.2 In the event that the equipment or cable is found to be damaged before unloading it is to be returned immediately to the factory for repairs and/or replacement by the manufacturer/supplier.

.3 In the event of damage occurring at any time during unloading and until the equipment is accepted by the Owner, the installing contractor is responsible for repairs and/or replacement of the damaged equipment to the satisfaction of the Owner.

9 OFFICE, STORAGE & TOOLS

9.1 Tools, Temporary Equipment and Materials

.1 Provide tools, equipment, scaffolding, extension cords, lamps and miscellaneous consumable materials, as required to carry out the Work.

10 COORDINATION; INTALLATION DRAWINGS

10.1 Coordination

.1 Consultant's drawings are diagrammatic and illustrate the general location of equipment, and intended routing of ductbanks, conduits, cable trays, feeders, etc. and do not show every structural detail. In congested areas drawings at greater scale may be provided to improve interpretation of the Work. Where equipment or systems are shown as "double line", they are done so either to improve understanding of the Work, or simply as a result of the use of a CAD drawing tool, and in either case such drawings are not represented as fabrication or installation drawings.

.2 Lay out and coordinate the Work to avoid conflict with work under other Divisions.

.3 Make good damage to Owner's property or to other trade's work caused by inaccurate layout or careless performance of the Work.

.4 Where equipment provided under other Divisions connects with material or equipment supplied under this Division, confirm capacity and ratings of equipment being provided.

.5 Take information involving accurate measurements from dimensioned Architectural Drawings or at the building.

.6 Install services and equipment which are to be concealed, close to the building structure so that furring is kept to minimum dimensions.

.7 Location of conduit, bus duct, raceways and equipment may be altered without extra cost provided instruction is given or approval is obtained, in advance of installation of items involved. Changes will be authorized by site instructions and are to be shown on Record Drawings.

.8 Include incidental material and equipment not specifically noted on Drawings or mentioned in Specifications but which is needed to complete the Work as an operating installation.

10.2 Field, Fabrication, and Installation Drawings

.1 Prepare field, fabrication, and/or installation drawings to show location of equipment and relative position of services and to demonstrate coordination with the work of other trades;

.1 drawing scale: minimum 1:50 (1/4"=1'-0"),

.2 use information from manufacturer's shop drawings for each trade and figured dimensions from latest Architectural and Structural Drawings,

.3 layout equipment and services to provide access for repair and maintenance,

.2 Circulate drawings to other trades involved in each area, and conduct coordination meetings with those trades.

11 ANCHORS AND INSERTS

.1 Supply anchor bolts and locating templates for installation in advance of concrete pouring.

12 CUTTING AND REMEDIAL WORK

12.1 General

.1 Assume responsibility for prompt installation of work in advance of concrete pouring, masonry, roofing, finishing and similar work. Should any cutting or repairing of either unfinished or finished work be required because such installation was not done, employ the particular trade, whose work is involved, to do such cutting and patching and pay for any resulting costs.

.2 Neatly cut or drill holes required in existing building elements to accommodate equipment such as cables, raceways, bus ducts, cable trays, etc.

.3 Arrange and pay for cutting and patching as required for the Work. Before cutting, drilling, or sleeving structural load bearing elements, obtain the Consultant's approval of location and methods in writing. Employ original installer or expert in the finishing of material required to perform cutting or patching for weather-exposed, moisture-resistant elements or sight-exposed surfaces.

13 PROTECTION OF PERSONNEL, WORK, AND PROPERTY

13.1 Personnel Protection

.1 Without limiting the Contractor's responsibilities regarding occupational health and safety requirements at the construction site, provide specific personnel protection as follows:

.1 protect exposed live equipment during construction for personnel safety,

.2 shield and mark live parts "LIVE 120 VOLTS", or with appropriate voltage,

.3 arrange for installation of temporary doors for rooms containing electrical distribution equipment. Keep these doors locked except when under direct supervision of electrician,

.4 do not leave conduit, wires, cables, tools, equipment or materials in such a way that they constitute a hazard,

.5 provide toe guards around openings in the roof or floor to prevent materials or debris from dropping down to a lower level,

.6 remove loose equipment and tools from overhead areas before leaving each day,

.7 cut off bolts at floor level to eliminate a possible tripping hazard.

13.2 Protection During Construction

.1 Provide protection required to enable existing building and equipment to remain in continuous and normal operation.

.2 Take the necessary precautions to protect equipment, existing building and service from damage during the Work. Accept responsibility for any damage and make good without cost to the Owner.

.3 Protect existing surfaces and items so that they are not damaged in any way whatsoever by the work of all trades. Take precautions as necessary to prevent damage to walls, floors, ceilings, windows, doors, door frames, moldings, finishes, piping, ductwork, light fixtures, etc. Provide protection, hoarding, tarpaulins, dust sleeves etc., as required. Any damage caused because of lack of adequate protection to be made good at no cost to the Owner.

.4 Take care when working above or around equipment that must remain in service.

.5 Take care to eliminate dust in equipment areas.

.6 Protect switchgear fronts from accidental breaker trips when working around or above them. Provide an extended shield constructed of 12 mm (½") fire retardant plywood a minimum of 450 mm (18") from board front to allow access to board.

13.3 Core Drilling

.1 Wherever core drilling is required, provide temporary dust proof screens.

.2 In areas where core drilling through a slab in an operating facility is necessary, clearly mark out the areas to be drilled on the underside of slab. Owner's representative to be notified at least 1 week prior to core drilling operation. Provide tarping of equipment supervised by the Owner.

.3 During core drilling operations, station at least one person directly below the area of drilling with a large plastic container pressed to underside of slab to capture and hold core and water upon completion of operations.

.4 Continuously use a wet/dry commercial quality vacuum at location of drilling operation to remove all excess water from the area.

13.4 Temporary Dust Proof Screens

.1 Provide temporary dust proof screens where required to separate work areas from completed areas and/or existing areas, to prevent dust from settling on the Owner's plant and equipment.

.2 Dust proof material to be neoprene coated nylon tarpaulin or other types of fabric.

.3 Provide temporary framing as required.

.4 Extend dust proof screens from floor to underside of ceiling, floor, or roof above. Lap sections of screen sheets 150 mm (6") minimum and tape joints.

.5 Secure screen sheets at top, bottom and ends and tape perimeter.

.6 Provide temporary doors and frames with weather seals to provide frequent access to the work zone. Other closure methods may be used where infrequent access or short term access (less than one week) only is required.

.7 Co-operate with Owner in the erection of temporary dust proof screens.

.8 Provide yellow-black warning tape along perimeter of the screen junction with the floor.

.9 Remove screens when and as directed by Consultant.]

13.5 Protection of Floors During Equipment Installation

.1 Provide protection of floor finishes during installation or removal of equipment, and at any other time when moving or installing heavy equipment.

.2 Install 19mm (¾") plywood over 6 mil plastic over finished floor areas when moving heavy equipment that could damage floor finish, or when installing equipment or line materials overhead.

.3 Repaint or re-tile any floors or walls damaged or scratched during construction.

13.6 Housekeeping

.1 Maintain a high level of cleanliness.

.2 Remove scrap and refuse from the work area daily.

.3 Whenever possible, clean up immediately following completion of work.

.4 Deposit oily and waste solvent rags in approved containers to minimize the fire hazard.

.5 Sweep and damp mop daily.

14 WORK IN EXISTING BUILDING

14.1 General

.1 Comply with Specification section of Division 01 for restrictions on working in existing occupied buildings and as follows.

.2 During the tender period, perform a site inspection of the place of work and surroundings including the accessible ceiling spaces and other areas where access could be considered reasonable. Make a thorough investigation of the as built conditions to determine the scope of renovation and demolition work required prior to submitting a tender.

.3 The Work includes changes to the existing building and changes at junction of old and new construction. Route cabling, ducts, conduits and other services to avoid interference with existing installation.

.4 Perform core drilling, Coordinate with Owner for specific times.

.5 Relocate existing pipes, ducts, conduits, bus ducts and any other equipment or services as necessary to accommodate the Work.

.6 Maintain or relocate existing services which pass through the area of renovation or demolition, but which feed items located outside of these areas. Rewire devices to the original circuits.

.7 Remove existing lighting fixtures, wiring, devices and equipment to suit new construction. Cut back and cap conduits and electrical outlets not being used, so that finished work presents a neat and clean appearance. Disconnect at point of electrical supply, remove obsolete wiring and conduits, and make existing systems safe. Blank off openings in panels or boxes created by the removal of cables, conduits, wireways or ducts.

.8 Where an existing ceiling is to be removed and reinstalled or replaced under another trades scope of work, and the existing electrical items such as luminaires, fire detectors, speakers, exit signs, emergency lighting heads etc., are to be reused, provide the following regarding the electrical items:

.1 remove,

.2 store in a secure, clean, dry location,

.3 install in the new ceiling, extend wiring and raceways as necessary,

.4 provide new items to match existing where existing items have been lost or damaged,

.5 make connections,

.6 clean,

.7 relamp luminaires,

.8 test,

.9 verify fire alarm devices,

.10 replace defective items with new, then retest/reverify,

.11 submit test and verification reports.

.9 Unless noted otherwise removed materials and equipment become the property of the Contractor and are to be taken from the site and disposed of appropriately.

.10 Review removed luminaires and equipment with the Owner's representative, and if the Owner instructs they wish to keep any items, move them to a designated location on the site. Luminaires and equipment that the Owner does not want become the property of the Contractor and are to be taken from the site and disposed of appropriately.

.11 For devices, fixtures and equipment to be relocated, provide junctions boxes, outlet boxes, wiring, plates, supports, etc., as necessary.

.12 Revise panelboard directories accordingly if affected by the Work.

.13 Clean and relamp relocated luminaires and replace any faulty ballasts.

.14 On completion of relocations, confirm that relocated devices and luminaires are in proper working order.

.15 Co-ordinate work affecting fire alarm system, fire safety, or protection systems with the Owner, Consultant, fire alarm system manufacturer and authorities having jurisdiction prior to commencing work. Retain the original fire alarm system manufacturer to verify relocated fire alarm devices, modified equipment and revised wiring. Provide temporary fire protection and/or a fire watch in all areas affected by the demolition and as required by authorities having jurisdiction.

.16 Where the Owner wishes to take over renovated areas ahead of the project completion date and these areas are intended to be fed from the distribution systems in the new building, make temporary connections to the existing services in these areas. Reconnect to permanent services at a later date, when the new distribution systems are available.

14.2 Continuity of Services

.1 Keep existing buildings in operation with minimum length of shutdown periods.

.2 Make connections to existing systems at approved times.

.3 Obtain written approval, recording times when connections can be made.

.4 Arrange the Work so that physical access to the existing buildings is not unduly interrupted.

.5 Be responsible for and make good any damages caused to existing systems when making connections.

.6 Provide premium time labour to tie-in feeders or wiring at night or on weekends.

.7 Provide temporary feeders and connections as required to maintain systems in operation where shutdown periods will exceed 8 hours, or extend beyond the allowable time frame determined by the Owner.

15 MOVING AND SETTING IN PLACE OWNER'S EQUIPMENT

15.1 General

.1 The requirements of this Part applies to;

.1 Division 26 equipment that has been pre-tendered or pre-purchased by the Owner, and

.2 other Owner-supplied products or equipment (i.e. process equipment) that has building services requirements.

.2 Comply with the requirements as specified herein.

15.2 Supplied by Owner Equipment (SBO)

.1 Items marked SBO on drawings are to be;

.1 purchased by the Owner,

.2 received, checked, stored, by the Contractor, and

.3 subsequently unpacked, uncrated, assembled and located in its final location by the Contractor, and installed in accordance with the manufacturer instructions,

.4 participate in the start-up and testing of the equipment and placing into service.

.2 Provide electrical services to this equipment.

15.3 Existing Owners Equipment to be Relocated (E.R. or Ex. Rel.)

.1 Applies to owners existing equipment which has mechanical and electrical services, and marked on the drawings as E.R. Ex.Rel. or otherwise so identified.

.2 Except as indicated below, items so marked on drawings will be moved from their present location and reinstalled by the Contractor. Disconnect and reconnect electrical services to accommodate the relocation of this equipment.

.3 Disconnect, remove, store as necessary, move into place, reinstall, clean and reconnect electrical items so marked, such as;

.1 luminaires,

.2 fire detectors,

.3 speakers,

.4 switches,

.5 receptacles,

.6 disconnects,

.7 splitters,

.8 panelboards,

.9 switchgear,

.10 transformers,

.11 etc.

.4

16 ELECTRICAL SYSTEM STUDIES AND REPORTS

16.1 General

.1 Contractor to provide coordination study, arch flash study and short circuit study as required.

17 FINAL CLEANING

17.1 Final Cleaning

.1 Conduct final cleaning in accordance with Division 01 requirements and as specified herein.

.2 Perform final cleaning after construction activities that create dust have been completed.

.3 Clean electrical equipment and devices installed as part of this project.

.4 Clean lighting reflectors, lenses, and other lighting surfaces that have been exposed to construction dust and dirt, including the top surface, whether exposed or in the ceiling space.

.5 Clean switch, receptacle, and communications outlets, coverplates, and exposed surfaces.

.6 Clean and vacuum any smoke detectors exposed to construction dust, do not use compressed air.

.7 Electrical rooms, generator rooms, sprinkler room and electrical or communication closets:

.1 Thoroughly vacuum and clean interiors and buswork of switchboards, panels, cabinets and other electrical equipment of construction debris and dust prior to energization using a HEPA vacuum cleaner. Final clean using clean lint free cloths with a cleaning liquid as recommended by the manufacturer for the purpose.

.2 HEPA vacuum the top of switchboards, panels, cabinets, bus ducts, cable trays and conduits, and mechanical duct work in the room, followed by a thorough HEPA vacuuming of the floors. Thoroughly wash floors with wet mop and clean water. Control access to the room after cleaning. Provide temporary filter media on air supply ducts to these rooms to prevent re-contamination from other areas of construction.

.3 Thoroughly re-clean as necessary prior to final turn over.

.4 Do not lay permanent switchboard matting in electrical rooms until rooms are thoroughly re-cleaned, and floors wet mopped and dried, immediately prior to final turn over.

18 TESTING

18.1 General

.1 The following describes the general requirements for testing of electrical systems; refer to additional testing requirements in applicable sections of Division 26 of the Work.

.2 Conduct and pay for the following tests;

.1 power distribution system including phasing, voltage, grounding and load balancing,

.2 circuits originating from branch distribution panels,

.3 lighting and its control,

.4 motors, heaters and associated control equipment including sequenced operation of systems where applicable,

.5 systems: fire alarm system, communications,

.6 additional testing as specified in other Sections.

.3 Furnish manufacturer's certificate or letter confirming that entire installation as it pertains to each system has been installed to manufacturer's instructions.

.4 Insulation resistance testing;

.1 megger circuits, feeders and equipment up to 350 V with a 500 V instrument,

.2 megger 350-600 V circuits, feeders and equipment with a 1000 V instrument,

.3 check resistance to ground before energizing.

.5 Carry out tests in presence of Consultant.

.6 Provide instruments, meters, equipment and personnel required to conduct tests during and at conclusion of project.

.7 Submit test results for Consultant's review. Test electrical equipment to standards and function of specifications, applicable codes and standards in an approved manner. Replace defective equipment and wiring with new material and leave entire system in complete first class operating condition.

18.2 Testing of Integrated Life Safety and Fire Protections Systems

.1 Conduct testing of integrated life safety and fire protection systems in accordance with specification Section 26 08 11 *Testing of Integrated Electrical Life Safety and Fire Protection Systems* .

19 LOAD BALANCE

.1 Measure phase current to panelboards with normal loads (lighting) operating at time of acceptance. Adjust branch circuit connections as required to obtain best balance of current between phases and record changes. Revise circuit labelling as appropriate.

.2 Measure phase voltages at loads and adjust transformer taps to within 2% of rated voltage of equipment.

.3 Submit, at completion of work, report listing phase and neutral current on panelboards, dry-core transformers and motor control centres, operating under normal load. State hour and date on which each load was measured, and voltage at time of test.

20 CO-ORDINATION OF PROTECTIVE DEVICES

.1 Ensure circuit protective devices such as overcurrent trips, relays and fuses are installed to required values and settings as per equipment manufacturers' recommendations for each piece of equipment.

END OF SECTION

QUALIFICATIONS AND AUTHORITIES - ONTARIO
26 01 02

1 GENERAL

1.1 Scope

.1 This specification section:

.1 describes the qualification requirements for tradesmen in the province of Ontario;

.2 defines the applicable authorities having jurisdiction related to construction in Ontario; and

.3 describes the responsibilities of the contractor and/or Owner for registration and inspection of systems and application for construction or installation permits.

1.2 Definitions

.1 ***ESA***: Electrical Safety Authority

2 QUALIFICATIONS

2.1 Trades Qualification and Apprenticeship

.1 Tradesmen to hold a certificate of competency for the following applicable trades:

.1 Electrician, R.R.O. 1990, Reg. 1051

3 AUTHOURITIES

3.1 Authorities having Jurisdiction

.1 When referenced in specification sections in Division 26 to 28, the authority-having-jurisdiction (“AHJ”) over regulated portions of the work are identified in the following table.

Work Element	Authority	AHJ Abbreviation
Electrical	ESA	ESA

4 PERMITS, REGISTRATION AND INSPECTION

4.1 Building Code Permits

.1 Application for Building Permit has been made by the Owner. Coordinate for municipal inspections required under the Ontario Building Code

4.2 Other Work Permits, Registration and Inspection

.1 Arrange, provide documentation, and pay for permits, registration, and inspection of the following work elements:

.1 Electrical work performed, and

.2 Where described elsewhere in Division 26 to 28.

.2 Arrange, provide documentation, and pay for variance approvals and field inspections where specified elsewhere in Division 26 to 28.

END OF SECTION

ELECTRICAL BASIC MATERIALS AND METHODS
26 05 01

1 GENERAL

1.1 Scope

.1 Articles that are of a general nature, apply to each Section of Divisions 26, 27 and 28.

2 GENERAL WIRING REQUIREMENTS

2.1 Wiring Terminations

.1 Lugs, terminals, screws used for termination of wiring to be suitable for either copper or aluminum conductors.

.2 Manufacturers' and CSA labels to be visible and legible after equipment is installed.

2.2 Conduit and Cable Installation

.1 Install embedded conduit prior to pouring of concrete.

.2 Arrange for holes through exterior walls and roof to be flashed and made weatherproof under Division 7.

.3 Install cables, conduits and fittings to be embedded or plastered over, neatly and close to building structure so furring can be kept to minimum.

.4 Supply and deliver inserts to site in ample time to be built into work of other trades. Provide necessary templates and adequate instructions and assistance to locate and install inserts.

.5 Secure inserts firmly to form work before concrete is poured.

.6 Provide insert drawings as required.

END OF SECTION

LOW-VOLTAGE ELECTRICAL POWER CONDUCTORS
26 05 19

1 GENERAL

1.1 Scope

.1 Provide wires and cables for systems operating between 0 and 1000 Volts, including:

- .1 building wires,
- .2 armoured cables,
- .3 aluminium sheathed cables,
- .4 mineral insulated cables including fire rated cables,
- .5 instrumentation and control cabling.

1.2 Related Sections

.1 Without limiting the scope of work or applicability of other specification sections, the work under this section directly integrates with or refers to the following specification sections:

.1	26 05 33	Conduits, Fastenings and Fittings
.2	26 27 28	Wire and Box Connectors - 0 - 1000 V

1.3 Applicable Codes and Standards

.1 Product standards:

.1	CSA C22.2 No. 38	Thermoset-Insulated Wires and Cables
.2	CSA C22.2 No. 51	Armoured Cables
.3	CSA C22.2 No. 94.1	Enclosures for Electrical Equipment, Non-Environmental Considerations
.4	CSA C22.2 No. 123	Metal Sheathed Cables
.5	CSA C22.2 No. 124	Mineral-Insulated Cables
.6	CSA C22.2 No. 131	Type TECK 90 Cable
.7	CSA C22.2 No. 239	Control and Instrumentation Cables
.8	ULC S139	Standard for Fire Test for Circuit Integrity of Fire-Resistive Power, Instrumentation, Control, and Data Cables

1.4 Design Criteria

.1 Conductor sizes are based on connected equipment having a temperature marking of 75°C or higher. Where equipment does not have a temperature marking or it has a marking lower than 75°C, increase the size of the conductors accordingly, to the satisfaction of the consultant.

.2 For wires in conduit, conductor sizes are based on not more than 3 current carrying conductors in a conduit. Where more than 3 current carrying conductors are installed in a conduit increase the conductor size accordingly, to the satisfaction of the consultant.

.3 Do not reduce conductor sizes, conductors may have been oversized due to voltage drop constraints.

1.5 Submittals

.1 Submit product data sheets for materials specified herein.

2 PRODUCTS

2.1 Building Wires

.1 Conductors: copper conductors: size as indicated.

.2 Minimum wire size: No. 12 AWG.

.3 Stranded conductors for 10 AWG and larger.

.4 Insulation:

.1 chemically cross-linked thermosetting polyethylene material,

.2 RW90 or RWU90 to CSA C22.2 No. 38,

.3 1000V and 600V ratings.

.5 Conductors to be colour coded. Conductors to have colour impregnated into insulation at time of manufacture. Phase conductors No. 8 AWG and larger, with black insulation, may be colour coded with adhesive colour coding tape.

Standard of Acceptance

- Aetna Insulated Wire
- General Cable
- Nexans Canada Inc.
- Prysmian Cables & Systems Ltd.
- Southwire

2.2 Armoured Cables

.1 Type: AC90, 600V 90C to CSA C22.2 No. 51, FT4 rated.

.2 Conductors:

.1 copper, minimum size #12,

.2 bare copper bonding wire sized per the electrical code.

.3 Insulation: RW90 XLPE.

.4 Armour: interlocking type fabricated from galvanized steel or aluminum strip.

2.3 Armoured Cables with Insulated Bonding Conductor

.1 Type: AC90 ISO-BX, 600V 90C to CSA C22.2 No. 51, FT4 rated.

.2 Conductors:

.1 copper, minimum size #12,

.2 green insulated copper bonding wire, same size as the phase conductors.

.3 Insulation: RW90 XLPE.

.4 Armour: interlocking type fabricated from galvanized steel or aluminum strip.

2.4 Armoured Cables Teck

.1 Type: TECK90, 600V to CSA C22.2 No. 131.

.2 Conductors: insulated copper

.3 Insulation: RW90 XLPE.

.4 Inner jacket; FT-4 rated PVC.

.5 Armour: interlocking steel for multiconductor cable, interlocking aluminum for single conductor cables.

.6 Bonding conductor:

.1 bare in multiconductor cables,

.2 bare concentric in single conductor cables,

.3 same material as phase conductors,

.4 isolated from the armour by the inner jacket.

.7 Outer jacket: FT-4 rating with rating permanently identified on jacket.

.8 Connectors:

.1 Watertight,

.2 Equal to T&B Star Teck type,

.3 Non-magnetic connectors for single conductor cables.

Standard of Acceptance (armoured, aluminium sheathed and TECK cables)

- Aetna Insulated Wire
- General Cable
- Nexans Canada Inc.
- Northern Cables Inc.
- Prysmian Cables & Systems Ltd.
- Southwire

2.5 Fire Rated Mineral Insulated Cable

.1 Type: MI, 600V to CSA C22.2 No. 124.

.2 Conductors: solid annealed copper, quantity and size as indicated.

.3 Insulation: compacted magnesium oxide.

.4 Sheath: seamless annealed copper.

.5 Terminations: as supplied by the cable manufacturer.

.6 Fire rating: listed 2 hour rating to ULC S139, cables labelled accordingly.

.7 Cables to be shipped with ends sealed.

Standard of Acceptance

- Pentair/Pyrotenax System 1850

2.6 Instrumentation and Control Cabling

.1 Control cables to CSA C22.2 NO. 239.

.2 Control cables as follows:

Conductors	Quantity, arrangement and gauge shown on drawings or specified elsewhere.
Identification	Colour coded or numbered.
Insulation	XLPE
Armour	Steel (No armour required if installed in conduit or approved wireway).

Jacket	FT4 Flame Retardant, FT6 when installed in open style cable trays in ceiling spaces that are used as return air plenums.

.3 Shielded cables to provide 100% shield coverage complete with drain wire.

.4 Multipair twisted shielded cables to have individually shielded pairs, overall shield, drain wires and overall rated jacket.

Standard of Acceptance

- General Cable (Carol)
- Belden
- Nexans Canada Inc.

3 EXECUTION

3.1 General

.1 Conductor colour coding to be as follows:

.1 Phase A - Red

.2 Phase B - Black

.3 Phase C - Blue

.4 Neutral - White

.5 Ground - Green

.6 Control - Orange

.2 Where colour coding tape is utilized, apply at least 50 mm (2") at terminations, junction boxes and pull boxes. Do not paint conductors.

.3 Use:

.1 1000 V insulation for 600 Volt systems,

.2 600 V insulation for 347/600 V and 120/208 V systems.

.4 Wiring installed underground: RWU90.

.5 Wiring in channel back of luminaires:

.1 600 volt type GTF or TEW,

.2 temperature rating as required by CSA and/or manufacturer requirements.

.6 Store wire and cable in a clean, dry, well ventilated area.

.7 Protect white insulated wire from exposure to NOx gas (eg: exhaust from propane fuelled equipment) by wrapping with shrink wrap, by locating away from sources of NOx and by maintaining adequate ventilation to minimize NOx levels.

.8 Where white insulated wire has discoloured:

.1 do not install,

.2 dispose of the wire,

.3 remove and replace wire that has been installed.

.9 Neatly train circuit wiring in cabinets, panels, pullboxes and junction boxes and hold with nylon cable ties.

Issued For Permit/Tender

.10 Splice wires:

.1 up to and including No. 6 AWG: with nylon insulated expandable spring type connectors with moulded thermoplastic body and expandable square edge design spring.

.2 larger than #6 AWG: with compression sleeve connectors and heat shrink insulating sleeves, voltage rating of sleeves equal to or greater than the cable.

.3 aluminum Conductors: with long barrel compression sleeve connectors approved for use with aluminum conductors and heat shrink insulating sleeves, voltage rating of sleeves equal to or greater than the cable.

.11 Do not splice conductors used in parallel runs.

.12 Where the Consultant agrees that splicing of conductors in a parallel run is unavoidable, connect the paralleled runs of the feeder together in a junction box at the splice location, using:

.1 copper bus bars of quantity and size to match the circuit,

.2 a two hole long barrel compression lug on each cable,

.3 two nuts and bolts on each lug,

.4 two oversized flat washers and a spring lock washer, or two Belleville washers, on each bolt,

.5 an oversized enclosure to house the above; CSA 22.2 No 94.1 Type 3R.

3.2 Installation of Building Wires

.1 Install wiring as follows:

.1 in conduit systems in accordance with Section 26 05 33.

.2 in wireways and auxiliary gutters in accordance with Section 26 05 37.

.2 Increase the size of branch circuit conductors and home runs as required so that the total voltage drop, from panelboards to loads, does not exceed 3% under load.

.3 For branch circuit wiring a common neutral conductor may be used with two or three phase conductors except where indicated otherwise. Where the load does not produce harmonic currents a common neutral conductor may be used with two or three phase conductors, subject to prior approval by the Consultant.]

.4 For branch wiring, common neutral conductors may be used in the following applications:

.1 lighting circuits, excluding dimming circuits,

.2 housekeeping receptacles,

.3 specific purpose receptacles for equipment that does not produce harmonic currents, such as resistance heating.

.5 Where wires are damaged or contaminated during installation, remove and dispose of wires, swab out conduits and pull in new, clean conductors.

3.3 Installation of Armoured Cables ACWU and TECK

.1 Install and terminate cables in accordance with manufacturer's recommendations.

.2 Use non-magnetic connectors for single conductor cables.

.3 For single conductor cables in free air circuits:

.1 Space cables one cable diameter apart throughout the run.

.2 Cut an opening in the enclosure at each end of the run, opening to be large enough for all cables of the circuit to pass through with spacings maintained.

.3 Provide a 6mm thick aluminium termination plate at each end of the run.

Issued For Permit/Tender

.4 Size the termination plates to overlap the openings by at least 20mm on all sides.

.5 Seal the plates to the enclosures with silicone sealant and secure to the enclosures with nuts, bolts and lock washers every 150mm.

.6 Terminate all cables of the circuit on the same terminal plate.

.7 Connect the cable bonding conductors to the enclosure bonding lug or bus at each end of the run.

.8 Bond each aluminium termination plate to its associated enclosure.

.9 At the load end of the run:

(a) provide a 6mm thick non-conductive fire-resistant FRP (Glastic) termination panel,

(b) size the termination panel to overlap the opening by at least 20mm on all sides,

(c) seal the panel to the enclosure with silicone sealant and secure to the enclosure with nuts, bolts and lock washers every 150mm,

(d) terminate all cables of the circuit on the terminal panel,

(e) cut off the cable bonding conductors at the connector and cover with insulating tape, ensure that the cable bonding conductors do not make any electrical contact.

(f) ensure that the cable connectors do not make electrical contact with the enclosure.

.10 Install a separate bonding conductor for the circuit:

(a) of copper wire,

(b) sized per the Electrical Safety Code,

(c) run from the bonding lug or bus in the supply end enclosure to the bonding lug or bus in the load end enclosure,

(d) separated from the phase cables throughout the run, by a distance of not less than the spacing between the phase cables,

(e) securely fastened throughout the run.

.4 For single conductor cables in direct buried circuits:

.1 Space cables apart per Diagram D8 of the electrical code.

.2 Maintain cable spacing throughout the run.

.3 Cut an opening in the enclosure at each end of the run, opening to be large enough for all cables of the circuit to pass through with spacings of not less than one cable diameter.

.4 At the supply end of the run:

(a) provide a 6mm thick aluminium termination plate,

(b) size the termination plate to overlap the opening by at least 20mm on all sides,

(c) seal the plate to the enclosure with silicone sealant and secure to the enclosure with nuts, bolts and lock washers every 150mm,

(d) terminate all cables of the circuit on the terminal plate,

(e) connect the cable bonding conductors to the enclosure bonding lug or bus,

(f) bond the aluminium termination plate to the enclosure.

.5 At the load end of the run:

(a) provide a 6mm thick non-conductive fire-resistant FRP (Glastic) termination panel,

(b) size the termination panel to overlap the opening by at least 20mm on all sides,

(c) seal the panel to the enclosure with silicone sealant and secure to the enclosure with nuts, bolts and lock washers every 150mm,

(d) terminate all cables of the circuit on the terminal panel,

Issued For Permit/Tender

(e) cut off the cable bonding conductors at the connector and cover with insulating tape, ensure that the cable bonding conductors do not make any electrical contact,

(f) ensure that the cable connectors do not make electrical contact with the enclosure.

.6 Install a separate bonding conductor for the circuit:

(a) insulated RWU90 copper,

(b) sized per the Electrical Safety Code,

(c) run from the bonding lug or bus in the supply end enclosure to the bonding lug or bus in the load end enclosure,

(d) separated from the phase cables throughout the run, by a distance of not less than the spacing between the phase cables.

3.4 Installation of Mineral Insulated Cables

.1 Provide fire rated mineral insulated cables unless non-fire rated cables are indicated.

.2 Store cables under dry conditions.

.3 Handle cables with care to avoid cable kinks; it is recommended that cable be uncoiled from supply reel by rolling. Do not install kinked cables.

.4 Install and terminate cables in accordance with the manufacturer's recommendations.

.5 Install fire rated cables in accordance with ULC S139 and in accordance with the manufacturer's recommendations.

.6 Install cables in trays, on hangers or on channels secured to walls, beams or floor slabs, using clamps supplied by or recommended by the manufacturer.

.7 For cable tray installations:

.1 install fire rated cables in stainless steel trays only,

.2 non fire rated cables may be installed in galvanized, aluminium, fibreglass or stainless steel trays.

.8 Support cables with clamps, straps, clips of:

.1 copper,

.2 stainless steel,

.3 steel material,

.4 aluminum, for non fire rated cables only.

.9 Secure cables so that they cannot contact any dissimilar metals other than the approved supporting materials.

.10 In damp or wet areas wrap cables with electrical tape where the cable contacts the supporting materials unless the supporting materials are copper or stainless steel. For non-fire rated cables only, clamps with integral rubber insets may be used in lieu of tape.

.11 Support fire rated cables:

.1 directly from fire rated structure per ULC FHITC.1850 or, where ULC FHITC.1850 cannot be applied, support cables in accordance with written instructions from the Consultant,

.2 on centres not exceeding:

(a) 1219 mm (4') for cables less than or equal to 7.6mm (0.3") in diameter,

(b) 1828 mm (6') for cables greater than 7.6mm (0.3") in diameter,

.3 with stainless steel clamps or straps on cable groups midway between supports, for single conductor cables.

Issued For Permit/Tender

.12 For non-fire rated cables provide supports on centres not exceeding 2000mm (6.56').

.13 Bend cables using a suitable hickey with a bending radius of not less than six times the cable diameter.

.14 Protect embedded cables from punctures and mechanical damage.

.15 For unjacketed single conductor cables that form a circuit or form one run of a feeder with parallel runs, install the cables with their sheaths in contact with one another throughout their length, excluding 1m at each point of connection to equipment or box.

.16 For single conductor cables in circuits rated 200 A and higher:

.1 Cut an opening in the enclosure at each end of the run, opening to be large enough for all cables of the circuit to pass through with spacings maintained.

.2 Provide a 6mm thick brass termination plate at each end of the run.

.3 Size the termination plates to overlap the openings by at least 20mm on all sides.

.4 Seal the plates to the enclosures with silicone sealant and secure to the enclosures with nuts, bolts and lock washers every 150mm.

.5 Terminate all cables of the circuit on the same termination plate.

.6 Provide a copper bonding conductor, sized per Table 16 of the ESC, from each brass termination plate to the equipment ground lug or bus in the associated enclosure.

.7 Connect to the termination plate and to the equipment ground lug or bus using Burndy YA compression connectors with 12mm stainless steel bolts and matching hardware.

.17 For parallel runs, install cable groups at least 2.15 cable diameters apart.

.18 Terminate cables using glands and seals as supplied by the cable manufacturer. Install gland and seal assemblies using tools specifically designed for the purpose.

.19 For fire rated feeders to fire pump controllers:

.1 terminate the mineral insulated cable in a type 3R junction box located adjacent to the fire pump controller,

.2 extend the feeder using RW90 in EMT, sized to match the ampacity rating of the mineral insulated cables,

.3 connect the EMT to the bottom of the fire pump controller enclosure, do not connect to the top or sides of the controller enclosure.

.20 Upon completion of cable terminations and prior to energization, test the insulation resistance of each cable with an insulation tester. Where measured values are not acceptable to the Consultant, rework or replace the cable until satisfactory results are obtained.

.21 For fire rated cables, provide the services of the cable manufacturer to inspect the cable installation and termination methods and provide a written report documenting that the cables have been installed in accordance with the requirements of the ULC standard and the ULC listing and in accordance with the manufacturer's recommendations. Submit the report to the Consultant.

3.5 Installation of Instrumentation, Communication and Control Cabling

.1 Install wiring as follows:

.1 in conduit systems in accordance with Section 26 05 33,

.2 in wireways and auxiliary gutters in accordance with Section 26 05 37,

.3 in open style cable trays in ceiling spaces, using FT6 plenum rated cable assemblies,

.4 in open style cable trays in ceiling spaces, using FT6 or FT4 rated cable where the ceiling space is not used as a return air plenum, as directed by the Consultant.

Issued For Permit/Tender

.2 Neatly train circuit wiring in cabinets, panels, pullboxes and junction boxes and hold with nylon cable ties.

.3 Run instrumentation, communication and control cabling point to point and terminate on terminal strips. Do not splice communication or control cabling. Where long runs make a continuous point to point installation impractical, make splices on labelled terminal blocks in an accessible labelled terminal cabinet, installed at 1200 mm (48") above floor, and indicate cabinet location, terminal and wire numbers on the As-built drawings.

.4 Terminate control cables in equipment with suitable connectors.

.5 Clearly identify cables at both ends, with permanent PVC wire markers, Weiland type Z or equal, indicating cable number and wire numbers.

END OF SECTION

Issued For Permit/Tender

SPLITTERS, JUNCTION AND PULL BOXES, CABINETS
26 05 32

1 GENERAL

1.1 Scope

.1 Provide splitters, junction boxes, pull boxes and cabinets.

1.2 Related Sections

.1 Without limiting the scope of work or applicability of other specification sections, the work under this section directly integrates with or refers to the following specification sections:

.1 26 24 16.14 Panel Trim

1.3 Applicable Codes and Standards

.1 Product standards:

.1 CSA C22.2 No. 76 Splitters.

.2 CSA C22.2 No. 40 Junction and Pull Boxes.

1.4 Submittals

.1 Submit shop drawings and product data for cabinets in accordance with Section 26 05 01 Electrical General Requirements.

2 PRODUCTS

2.1 Splitters

.1 Sheet metal enclosure, welded corners and formed hinged cover suitable for locking in closed position.

.2 Main and branch lugs and connection bars to match required size and number of incoming and outgoing conductors as indicated.

.3 At least three spare terminals on each set of lugs in splitters.

.4 Distribution riser splitters shall be of special construction with hinged access door, copper bus bars predrilled to accept two hole compression connectors for all incoming and outgoing cables.

2.2 Junction and Pull Boxes

.1 Welded steel hot dipped galvanized construction with screw-on flat covers for surface mounting.

.2 Covers with 25 mm (1") minimum extension all around, for flush-mounted pull and junction boxes.

2.3 Cabinets

.1 Type E: sheet steel, hinged door and return flange overlapping sides, handle, lock and catch, for surface mounting.

.2 Type T: sheet steel cabinet, with hinged door, latch, lock, 2 keys, containing sheet steel backboard for surface or flush mounting as indicated.

.3 Cabinet trim to conform to Specification section 26 24 16.14.

.4 Surface mounted cabinet finish colour: ASA 61 grey.

Issued For Permit/Tender

2.4 Instrumentation and Control Terminal Cabinets

.1 Surface mounted, gasketed, drip proof and dust tight, JIC enclosure, CEMA type 12 With hinged door, lock, 2 keys, white raised and removable internal mounting panel, diagram pocket, finished with ASA 61 grey.

Standard of Acceptance

° Hammond

.2 Panel wiring to be contained in PVC wiring ducts complete with cover strips, minimum 50 mm x 50 mm (2" x 2"). Wireway fill to be limited to 60%. Where there are a large number of door mounted devices, door wiring harnesses shall also be contained in wiring ducts at rear door. All door wiring devices to emanate from the control panel terminal strips. Wiring to panel face mounted devices to be bundled neatly on hinge side of panel, enclosed in flexible spiral wrap, and installed such that wiring will not be damaged when opening and closing door. Ground panel door to panel with a flexible copper bonding strap. Label all wiring with permanent PVC sleeve type markers.

.3 Phoenix contact terminal blocks with mounting rails, end covers, terminal markers, partition plates and accessories: UK 2.5 termination of wiring 22 to 12 AWG; UK 5 and UK 10 series for current transformers and other leads #10 AWG and #8 AWG; UDK or UK 5 twin for connecting two or more conductors to one terminal block; DIK 1.5 for three wire sensor device wiring; MTKD for thermocouple leads.

.4 Provide lamacoid nameplates for all panel mounted control and indicating devices, and all internal components such as terminal strips, control transformers, control devices, relays, etc. as per 26 05 01.

3 EXECUTION

3.1 Splitter Installation

.1 Install splitters and mount plumb, true and square to the building lines.

.2 Extend splitters full length of equipment arrangement except where indicated otherwise.

3.2 Junction, Pull Boxes and Cabinets Installation

.1 Install pull boxes in inconspicuous but accessible locations.

.2 Mount cabinets with top not higher than 2 m (6'-6") above finished floor.

.3 Install terminal block as indicated in Type T cabinets

.4 Only main junction and pull boxes are indicated. Install pull boxes so as not to exceed 30 m {100'} of conduit run between pull boxes.

3.3 Identification

.1 Provide equipment identification in accordance with Section 26 05 01 - Electrical - General Requirements.

.2 Install size 2 identification labels indicating system name, voltage, phase and source of power.

.3 Provide a typed directory in cabinets showing following information: Nature, actual quantities and room number of device or devices connected to each terminal, as well as signal circuit number where applicable.

END OF SECTION

CONDUITS, FASTENINGS AND FITTINGS
26 05 33

1 GENERAL

1.1 Scope

.1 Provide conduits, fastenings and fittings for electrical conductors.

1.2 Submittals

.1 Submit shop drawings and product data for products specified herein.

1.3 Applicable Codes and Standards

.1 Product standards:

.1	CSA C22.2 No. 18.1	Metallic Outlet Boxes
.2	CSA C22.2 No. 45.1	Electrical Rigid Metal Conduit - Steel
.3	CSA C22.2 No. 83	Electrical Metallic Tubing
.4	CSA C22.2 No. 56	Flexible Metal Conduit and Liquid-Tight Flexible Metal Conduit
.5	CSA C22.2 No 211.2	Rigid PVC (unplasticized) Conduit

2 PRODUCTS

2.1 Conduits

.1 Rigid hot dipped galvanized steel threaded conduit to CSA C22.2 No. 45.1.

.1 epoxy coated rigid galvanized steel conduit: with zinc coating and corrosion resistant epoxy finish inside and outside equal to Columbex Green Guard II

.2 PVC coated hot dipped galvanized rigid steel conduit: with 40 mil PVC exterior coating, 2 mil urethane interior and thread coating equal to Rob Roy Plastibond RedHot

.2 Electrical metallic tubing (EMT), galvanized: with couplings to CSA C22.2 No. 83

.3 Rigid PVC conduit to CSA C22.2 No 211.2.

.4 Flexible metal conduit and liquid-tight flexible metal conduit to CSA C22.2 No. 56.

.5 Size conduits sufficiently to allow easy removal of conductors at any time. Conduit sizes, where shown, are minimum and shall not be reduced.

2.2 Conduit Fastenings

.1 One hole steel straps to secure surface conduits 50 mm (2 in.) and smaller. Two hole steel straps for conduits larger than 50 mm (2 in.).

.2 Beam clamps to secure conduits to exposed steel work.

.3 Channel type supports for two or more conduits.

.4 Six mm dia threaded rods to support suspended channels.

2.3 Conduit Fittings

.1 Fittings: manufactured for use with conduit specified. Coating: same as conduit.

.2 Factory "ells" where 90 degree bends are required for 25 mm (1 in.) and larger conduits

.3 Raintight insulated throat steel compression connectors and couplings for EMT.

.4 Threaded or compression type raintight/concrete tight insulated throat zinc plated steel connectors and couplings for rigid steel conduit.

.5 Raintight insulated throat steel connectors at all surface panelboards, switchboards and other electrical equipment in sprinklered areas for all conduit terminations.

2.4 Expansion Fittings

.1 Electrogalvanized steel with internal grounding for EMT suitable for 100mm (4 in.) linear conduit movement.

Standard of Acceptance

° Cooper Crouse Hinds XJG-EMT

.2 Weatherproof expansion fittings with internal bonding assembly suitable for 100mm (4 in.) linear expansion.

.3 Watertight expansion fittings with integral bonding jumper suitable for linear expansion and 19 mm (3/4 pm.) deflection in all directions.

.4 Concrete type, water tight, corrosion resistant for conduit installations embedded in concrete

.5 Weatherproof expansion fittings for linear expansion at entry to panel.

2.5 Fish Cord

.1 Polypropylene.

3 EXECUTION

3.1 Location of Conduit

.1 Drawings do not indicate all conduit runs. Those indicated are in diagrammatic form only.

3.2 Installation

.1 Install conduits to conserve headroom in exposed locations and cause minimum interference in spaces through which they pass.

.2 Conceal conduits except in mechanical and electrical service rooms and in unfinished areas.

.3 Use electrical metallic tubing (EMT) except: in cast concrete, underground or where installed exposed within 2.0m (6'-6") of floor.

.4 Use rigid galvanized steel conduit where installed surface mounted within 2.0m (6'-6") of floor.

.5 Use rigid PVC conduit in slab on grade cast concrete and underground. Do not use PVC conduits in slabs above grade. All conduits shall be surface mounted to minimize risks of future damage when core drilling during future renovations. Where localized congestion or circumstances forces the use of conduits in the floor slabs, they shall be epoxy coated rigid galvanized steel.

.6 Provide PVC conduit with bonding conductor as per Table 16A of Ontario Electrical Safety Code.

.7 Use liquid tight flexible metal conduit for connection to motors or vibrating equipment

.8 Use explosion proof flexible connection for connection to explosion proof motors.

.9 Install conduit sealing fittings in hazardous areas. Fill with compound.

.10 Use raintight connectors or hubs for terminating conduits at all surface or floor mounted panelboards, switchboards, and other equipment located in sprinklered areas or where at risk of exposure to dripping liquids.

.11 Install wiring in conduit unless otherwise specified.

.12 Bend conduit cold. Replace conduit if kinked or flattened more than 1/10th of its original diameter.

.13 Mechanically bend steel conduit over 19mm (3/4") dia.

.14 Field threads on rigid conduit must be of sufficient length to draw conduits up tight.

.15 Install fish cord in empty conduits.

.16 Where conduits become blocked, remove and replace blocked section. Do not use liquids to clean out conduits.

.17 Dry conduits out before installing wire.

.18 Conduit manufacturer's touch up enamel shall be used to repair all scratches and gouges on epoxy-coated conduit.

.19 Install junction boxes or cable anchor boxes wherever necessary for proper pulling or anchoring of cables. Install so as to be accessible after building is completed and set to come within finished lines of building.

.20 Where EMT or rigid PVC is used, run green insulated bonding conductor in conduit, with minimum one bonding conductor per three ungrounded conductors.

.21 Provide expansion couplings, with bonding jumper and ground clamps where raceways cross building control joints.

.22 Where circuits are required in the vicinity of a steel roof deck:

- .1 support the conduits, EMT or cables at least 38mm (1½") below the underside of the deck,
- .2 do not run conduits, EMT or cables on the top side of the roof deck,
- .3 do not cut openings in the roof deck unless specifically indicated,
- .4 where circuits must be located within 38mm (1½") of the underside of a roof deck, use galvanized rigid steel conduit and cast fittings,
- .5 where there is no option to running conduits on the top side of a roof deck, use epoxy or PVC coated galvanized rigid steel conduit with epoxy or PVC coated cast fittings.

.23 Where conduits or cables are installed under raised floors and are required to be fastened in place, use two hole inverted "U" straps. No sharp edges or corners will be permitted which may damage PVC jackets or cables.

.24 Runs of conduit and cables, where shown, are indicated only by general location and routing. Install conduits and cables so as to provide maximum head room and to interfere as little as possible with free use of spaces through which they pass. They shall be installed as close to building structure as possible such that, where concealed, necessary furring can be kept to a minimum. Arrange conduits, installed in suspended ceilings, to provide minimum interference with removal of tiles.

3.3 Wiring Methods

.1 Install wiring in surface mounted EMT conduit unless otherwise specified. In finished areas, conceal conduit in walls and ceiling spaces.

.2 In areas designated as Explosion Proof on Drawings, conduit and wiring shall be Class I, Group D, Division I.

.3 Where shown on drawings, armoured cable shall be Teck 90 type. Jackets of cable shall have FT-4 rating identified. Connectors shall be equal to ABB Installation Products Ltd. (T & B) - Star Teck Type.

.4 Rigid PVC conduit with ground wire as per Electrical Safety Code Table 16 shall be used throughout below grade areas and may be used in or under slab on grade areas. It shall not be used in above grade slabs.

.5 Epoxy enamel or PVC coated rigid galvanized steel conduit shall be used throughout basement; in damp locations including but not limited to intake and exhaust shafts and air handling units; for rigid metallic conduit underground or in floor slabs; for wiring outdoors and in unheated buildings; and where noted on Drawings.

.6 Runs of conduit and cables, where shown, are indicated only by general location and routing. Install conduits and cables so as to provide maximum head room and to interfere as little as possible with free use of spaces through which they pass.

.7 Use EMT conduit for branch circuit and signal wiring in ceilings, furred spaces, and in hollow walls and partitions.

.8 Use rigid galvanized steel conduit for wiring where conduits are exposed to possible mechanical damage.

.9 Use epoxy coated rigid galvanized steel conduit for wiring in poured concrete.

.10 Aluminum conduits shall not be used.

.11 Flexible conduit and armoured cable will be accepted in parts of existing building, where furred spaces above ceilings are too congested to permit conduit to be installed, but only with Consultants written permission. Terminate armoured cable, where shown, in accordance with the manufacturer's recommendations.

.12 Flexible steel conduit with integral insulated green ground wire is permitted for the final connection to luminaires mounted in suspended ceilings from the branch wiring junction box above, with flexible conduit length not to exceed 3 m (10'), and be neatly installed and attached to luminaire support chain

.13 Flexible armoured conduit (or BX) with an integral insulated green ground wire may be used where concealed in walls for wiring to receptacles, and for the final connection to luminaires.

.1 The junction box interfacing the horizontal EMT conduit to the flexible conduit shall be located within 3 m (10') horizontally from the end device in open areas, and in enclosed rooms, located in the same room as the devices being served, in reasonable proximity to the walls, in order to keep the horizontal portion of the run of flexible conduit to less than 3 m (10').

.2 The flexible conduit shall be neatly installed parallel or perpendicular to building lines, and independently supported from the slab structure above.

.14 Conduit shall be of sufficient size to permit easy removal of conductors at any time. Conduit sizes, where shown, are minimum and shall not be reduced.

.15 Arrange conduits, installed in suspended ceilings, to provide minimum interference with removal of tiles.

.16 Where existing locations of flush mounted electrical devices (switches, receptacles, etc.) correspond to new devices shown, the existing downdrop conduit and outlet box may be re-used. Provide new devices, new coverplates, new home-run conduit and complete new wire.

.17 Vertical raceways to be provided with insulated cable support bushings or other approved method of supporting the weight of the cable, where vertical runs exceed those of Table 21 of the Electrical Code.

3.4 Surface Conduits

.1 Run parallel or perpendicular to building lines.

.2 Locate conduits behind infrared or gas fired heaters with 1.5m (5') clearance.

.3 Run conduits in flanged portion of structural steel.

.4 Group conduits wherever possible on suspended or surface channels.

.5 Do not pass conduits through structural members except as indicated.

.6 Do not locate conduits less than 75 mm (3") parallel to steam or hot water lines with minimum of 25 mm (1") at crossovers.

3.5 Concealed Conduit

.1 Do not install horizontal runs in masonry walls.

.2 Do not install conduits in terrazzo or concrete toppings.

3.6 Conduits in Cast-in-place Concrete

.1 Locate to suit reinforcing steel. Install in centre one third of slab.

.2 Protect conduits from damage where they stub out of concrete.

.3 Install sleeves where conduits pass through slab or wall.

.4 Where conduits pass through waterproof membrane provide oversized sleeve before membrane is installed. Use cold mastic between sleeve and conduit.

.5 Do not place conduits is slabs in which slab thickness is less than 4 times conduit diameter.

.6 Encase conduits completely in concrete with minimum 25 mm (1") concrete cover.

.7 Organize conduits in slab to minimize cross-overs.

3.7 Conduits in Cast-in-place Slabs on Grade

.1 Run conduits 25 mm (1") and larger below slab and encased in 75 mm (3"} 75 mm concrete envelope. Provide {50 mm (2"} of sand over concrete envelope below floor slab.

3.8 Conduits Underground

.1 Slope conduits to provide drainage.

END OF SECTION

OUTLET BOXES, CONDUIT BOXES AND FITTINGS
26 05 35

1 GENERAL

1.1 Scope

.1 Provide outlet boxes, conduit boxes and fittings for electrical services.

1.2 Related Sections

.1 Without limiting the scope of work or applicability of other specification sections, the work under this section directly integrates with or refers to the following specification sections:

.1 26 27 28 Wire and Box Connectors 0-1000V

1.3 Applicable Codes and Standards

.1 Product standards:

.1 CSA C22.2 No. 18. Outlet Boxes, Conduit Boxes, and Fittings

2 PRODUCTS

2.1 General

.1 Outlet boxes, conduit boxes, and fittings listed to CSA C22.2 No. 18.

2.2 Outlet and Conduit Boxes - General

.1 Size boxes in accordance with CSA C22.1

.2 102 mm (4") square or larger outlet boxes as required for special devices

.3 Gang boxes where wiring devices are grouped.

.4 Blank cover plates for boxes without wiring devices.

.5 Combination boxes with barriers where outlets for more than one system are grouped.

2.3 Sheet Steel Outlet Boxes

.1 Hot dipped galvanized steel single and multi gang flush device boxes for flush installation, minimum size 76 mm x 50 mm x 38 mm (3" x 2" x 1½") or as indicated. 102 mm (4") square outlet boxes when more than one conduit enters one side with extension and plaster rings as required.

.2 102 mm (4") square or octagonal outlet boxes for lighting fixture outlets.

.3 102 mm (4") square outlet boxes with extension and plaster rings for flush mounting devices in finished plaster or tile walls.

2.4 Masonry Boxes

.1 Hot dipped galvanized steel masonry single and multi-gang boxes for devices flush mounted in exposed block walls.

2.5 Concrete Boxes

.1 Hot dipped galvanized sheet steel concrete type boxes for flush mount in concrete with matching extension and plaster rings as required.

2.6 Floor Boxes

.1 Concrete tight hot dipped galvanized sheet steel floor boxes with adjustable finishing rings to suit floor finish with brass or brushed aluminum faceplate. Device mounting plate to accommodate short or long ear duplex single or receptacles. Minimum depth: 28 mm (1¼") for receptacles; 73 mm (3") for communication equipment.

.2 Adjustable, watertight, concrete tight, cast floor boxes with openings drilled and tapped for 12 mm (½") and 19 mm (¾") conduit. Minimum size: 73 mm (3") deep.

2.7 Conduit Boxes

.1 Cast FS boxes with factory-threaded hubs and mounting feet for surface wiring of switches and receptacle, outside building and where weatherproof boxes are required.

.2 Explosion proof boxes in areas indicated on drawings.

2.8 Fittings - General

.1 Bushing and connectors with nylon insulated throats.

.2 Knock-out fillers to prevent entry of debris.

.3 Conduit outlet bodies for conduit up to 32 mm (1½") and pull boxes for larger conduits.

.4 Double locknuts and insulated bushings on sheet metal boxes.

2.9 Acoustical Putty Pads

.1 Moldable putty sheets:

.1 3mm (1/8”) thick,

.2 Sound Transmission Class (STC) rating of not less than 23 for one layer,

.3 self adhesive,

.4 non-combustible,

.5 non-hardening,

.6 non-shrinking,

.7 non-corrosive to:

(a) boxes,

(b) EMT,

(c) conduit,

(d) PVC,

.8 asbestos free.

Standard of Acceptance

- 3M - Fire Stop Moldable Putty Pads
- Hilti – Firestop Putty Pads
- Kinetics - IsoBacker

3 EXECUTION

3.1 Installation

.1 Support boxes independently of connecting conduits.

.2 Fill boxes with paper, sponges or foam or similar approved material to prevent entry of debris during construction. Remove upon completion of work.

.3 For flush installations mount outlets flush with finished wall using plaster rings to permit wall finish to come within 6 mm (¼") of opening.

.4 Provide correct size of openings in boxes for conduit, mineral insulated and armoured cable connections. Reducing washers are not allowed.

.5 Provide a suitable outlet box for each light, switch, receptacle or other outlet, approved for the particular area in which it is to be installed.

.6 Locate outlet boxes, mounted in hung ceiling space, so they do not obstruct or interfere with the removal of lay-in ceiling tiles.

.7 Offset outlet boxes, shown back to back in partitions, horizontally to minimize noise transmission between adjacent rooms.

.8 Box connectors to conform to Specification section 26 27 28.

.9 For outlet boxes installed in walls with a Sound Transmission Class (STC) rating:

.1 apply acoustical putty pads to the outlet box,

.2 cover all openings and EMT, conduit and cable entrances/exits,

.3 install putty pads on the outside of boxes,

.4 provide additional layers and/or provide other sound control measures, as necessary to maintain the STC rating of the wall assembly,

.5 install pads and other sound control measures, if applicable, in accordance with the manufacturers recommendations.

.10 Use gang boxes at locations where more than one device is to be mounted. Use combination boxes with suitable barriers where outlets for more than one system are shown.

.11 Where 100 mm (4") square boxes are installed in exposed concrete or cinder block in finished areas, blocks will be cut under masonry division as instructed under this section. Openings shall be cut to provide a close fit to boxes and covers so that edges of openings are not visible after installation of plates. Mortar shall not be used to patch up openings that are cut too large or to patch ragged edges.

.12 Where boxes are required for wiring and equipment on the underside of a steel roof deck:

.1 support the boxes at least 38mm (1½") below the underside of the deck,

.2 do not cut openings in the roof deck unless specifically indicated,

.3 where boxes must be located within 38mm (1½") of the underside of a roof deck, use cast conduit boxes.

END OF SECTION

WIRING TO OWNERS EQUIPMENT
26 07 13

1 GENERAL

1.1 Scope

.1 Provide electrical services and equipment for owners equipment as shown.

1.2 Related Sections

.1 Without limiting the scope of work or applicability of other specification sections, the work under this section directly integrates with or refers to the following specification sections:

1.3 Related Work

.1 Certain items, such as ranges and refrigerators, will be supplied by Owners and put in place by another Division.

2 PRODUCTS

2.1 (Not Used)

3 EXECUTION

3.1 Installation

.1 Provide electrical work required to connect electrical parts of items, supplied by Owners and placed by another Division.

.2 Disconnect Owner's equipment, where such exists in building, prior to its relocation, and reconnect in its new location.

.3 Test circuits for correct operation.

END OF SECTION

WIRING DEVICES
26 27 26

1 GENERAL

1.1 Scope

.1 Provide wiring devices as shown.

1.2 Related Sections

.1 Without limiting the scope of work or applicability of other specification sections, the work under this section directly integrates with or refers to the following specification sections:

.1 26 05 53 Identification for Electrical Systems.

1.3 Applicable Codes and Standards

.1 Product standards:

.1 CSA C22.2 No. 111 Switches.

.2 CSA C22.2 No. 42 Receptacles.

1.4 Submittals

.1 Submit shop drawings for each type and size of device.

2 PRODUCTS

2.1 Nameplates

.1 Wall mounted:

.1 engraved laminated plastic to Section 26 05 53.

.2 7 mm (¼”) high letters unless indicated otherwise.

.2 Receptacle mounted:

.1 permanently printed on white polyester background,

.2 7 mm (¼") high letters unless indicated otherwise,

.3 UV resistant inks,

.4 clear polyester over lamination,

.5 pressure sensitive adhesive.

.3 Colours:

.1 normal power: black lettering on white background,

.2 emergency power: red lettering on a white background,

2.2 Switches

.1 Features:

.1 20 A, 120 V, general purpose AC type,

.2 higher ratings where indicated,

.3 listed to CSA 22.2 No. 111.

.4 fully rated for:

(a) tungsten filament lamps,
(b) fluorescent lamps,
(c) inductive loads,

.5 HP rated where used in motor circuits, with rating not less than the motor HP,

.6 industrial/specification grade for toggle switches, specification grade for Decora style switches

.7 Decora style in finished areas, toggle handle type in unfinished areas

.8 silent operation,

.9 terminals rated for No. 10 AWG wire,

.10 suitable for back and side wiring,

.11 silver alloy contacts,

.12 single pole, double pole, three-way, four-way switches as indicated.

.2 Toggle colours:

.1 Normal power: white

.2 Emergency power: clear.

.3 Decora rocker colour: white

.4 Switches of one manufacturer throughout project, unless accepted otherwise.

Standard of Acceptance

- Pass & Seymour (Legrand)
- Hubbell
- Bryant Electric
- Eaton Wiring Devices (Arrow Hart)
- Leviton

.5 Switches controlling lights on 347 volt power circuits:

Standard of Acceptance

Type	Catalogue Numbers				
	Hubbell (Toggle) / (Decora)	Bryant (Toggle) / (Decora)	P & S (Toggle) / (Decora)	Eaton (Toggle) / (Decora)	Leviton (Toggle) / (Decora)
Single Pole	HBL18201CN / -	-	PS371510 / 2601347	AH18201 / 7601-347	18201 / 5691-C
Double Pole	- / -	-	- / -	AH18202 / -	18202 / -
Three-Way	HBL18203CN / -	-	PS371530 / 2603347	AH18203 / 7603-347	18203 / 5693-C
Four-Way	HBL18204CN / -	-	- / -	/ 7604-347	18204 / 5694-C

2.3 Receptacles

.1 Listed to CSA C22.2 No. 42.

.2 Decora style.

.3 Heavy duty industrial/specification grade.

.4 With the following features:

.1 eight back wired entrances, four side wiring screws,

.2 suitable for no. 10 AWG for back and side wiring,

.3 break-off links for use as split receptacles,

.4 triple wipe contacts,

.5 riveted or integral ground contacts.

.5 Colour coded as follows:

.1 Normal power: white

.2 Emergency power: red.

.6 One manufacturer throughout the project.

Standard of Acceptance

- Pass & Seymour (Legrand)
- Hubbell
- Bryant Electric
- Eaton Wiring Devices (Arrow Hart)
- Leviton

.7 The receptacles listed below represent the most common configurations and are not necessarily used on this project. Refer to drawings for types used.

.1 Duplex receptacle: 15 ampere, 120 volt, grounded CSA Configuration 5-15R:

Standard of Acceptance

Type	Catalogue Numbers				
	P & S	Hubbell	Bryant	Leviton	Eaton
Non-decora	5262	5262	5262	5262	AH5262
Decora	26252	HBL2152	9252	16262	6262

.2 Controlled duplex receptacle: 15 ampere, 120 volt, grounded CSA Configuration 5-15R:

Standard of Acceptance

Type	Catalogue Numbers				
	P & S	Hubbell	Bryant	Leviton	Eaton
Half-Controlled	26252CH	DR15C1	DRS15C1	16252-1PW	6252CH
Dual-Controlled	26252CD	DR15C2	DRS15C2	16252-2PW	6252CD

.3 Duplex receptacle: 15 / 20 ampere, 120 volt, grounded CSA Configuration 5-20R:

Standard of Acceptance

Type	Catalogue Numbers				
	P & S	Hubbell	Bryant	Leviton	Eaton
Non-decora	5362	5362	5362	5362	AH5362
Decora	26352	HBL2162	9352	16362	6362

.4 Duplex receptacle: 15 / 20 ampere, 120 volt, grounded CSA Configuration 5-20R:

Standard of Acceptance

Type	Catalogue Numbers				
	P & S	Hubbell	Bryant	Leviton	Eaton
Non-decora	5362	5362	5362	5362	AH5362
Decora	26352	HBL2162	9352	16362	6362

.5 Controlled duplex receptacle: 20 ampere, 120 volt, grounded CSA Configuration 5-20R:

Standard of Acceptance

Type	Catalogue Numbers				
	P & S	Hubbell	Bryant	Leviton	Eaton
Half-Controlled	26352CH	DR20C1	DRS20C1	16352-1PW	6352CH
Dual-Controlled	26352CD	DR20C2	DRS20C2	16352-2PW	6352CD

2.4 Occupancy / Vacancy sensors

.1 Neutral required dual technology wall switches: 20 ampere, 120 volt:

Standard of Acceptance

Type	Catalogue Numbers						
	Leviton	Hubbell	Eaton	P & S	Bryant	Watt-stopper	Lutron
Single Relay	OSSMT-TMW	AD2000-1	OSD10N	WDT100	MSD2000-1	DSW-100	MS-B102
Double Relay	-	AD2000-2	OSD10DN	WDT200	MSD2000-2	DSW-200	MS-B202

.2 Neutral required dual technology wall switches: 15 ampere, 347 volt:

Standard of Acceptance

Type	Catalogue Numbers	
	Leviton	Wattstopper
Single Relay	OSSMT-M3W	-
Double Relay	-	DSW301-347

2.5 Dimmer Switches

.1 Dimmers for use on incandescent lamps:

.1 1000 watt capacity,

.2 RFI toroidal choke filter,

.3 white cover plates.

Standard of Acceptance

- Lutron "Diva C●L Series" (600W)
- Leviton DSM10-1L
- Hubbell AS103
- P & S (Legrand/Wattstopper) H1103PW (1100W), H703PW (700W)
- Bryant RDV10P/RVD103P
- Eaton DI10P

.2 Provide Lutron #CPW lamp debuzzing coil when dimming 150 watt "Par" or "R" lamps.

.3 Multi-scene dimmer/controllers:

.1 with up to five preset scenes:

Standard of Acceptance

- Lutron “Spacer System”
- Leviton Dimensions D4000 Remote Entrance Station

.2 with four to sixteen preset scenes:

Standard of Acceptance

- Lutron Grafik Eye QS
- Leviton Dimensions D4106-1LW

.4 Dimmers controlling up to 10 fluorescent lamps: complete with Lutron #NTF-10 series control module.

.5 Associated single or two lamp ballasts of fluorescent luminaires being dimmed: electronic fluorescent dimming ballasts:

Standard of Acceptance

- Lutron Hi-lume (1%-100%)

.6 Associated ballasts of compact fluorescent luminaires being dimmed: compact fluorescent electronic dimming ballasts:

Standard of Acceptance

- Lutron Hi-lume Compact (5%-100%)

.7 Dimmers for 0-10V LED drivers and fluorescent ballasts:

Standard of Acceptance

- Lutron Diva DVSTV
- Leviton DS710-10
- Cooper DF10P

.8 Colour:

.1 Normal power: white.

.2 Emergency power: red.

2.6 CONNECTRAC

.1 Flex Raceway System

.2 Under carpet Installation and ADA compliant

.3 Duplex receptacle monument

.4 Ability to connect to whip connection.

.5 One manufacturer throughout the project.

Standard of Acceptance

- Legrand or equivalent

2.7 Floor Outlets

.1 Flush mounted duplex floor receptacles:

.1 Listed to CSA C22.2 No. 42.

.2 15 ampere, 120 volt

.3 CSA configuration 5-15R

.4 adjustable, watertight floor boxes.

Standard of Acceptance

- Hubbell B2431 single gang box (brass)
- Hubbell B2432 double gang box (brass)
- Hubbell B2433 three gang box (brass)
- Legrand 880-OMNI (single/double/three gang boxes, brass)

.2 Service fitting for floor receptacle to be complete with receptacle specified above (Hubbell), unless noted otherwise.

Standard of Acceptance

- Hubbell S3826, duplex Style Line decorator opening (brass)

.3 Poke-through flush mounted, adjustable, watertight floor devices:

Standard of Acceptance

- Legrand Evolution 6AT Series (with Flush Style Cover)
- Hubbell SystemOne Recessed S1R6PT Series
- Steel City (Thomas&Betts) FPT4 Series

2.8 Cover Plates

.1 Compatible with wiring device.

.2 Stainless steel 18-8 chrome metal alloy, Type 302, vertically brushed, 1 mm (1/32") thick cover plates for wiring devices in flush-mounted outlet boxes.

.3 Cast cover plates for wiring devices mounted in surface-mounted FS or FD type conduit boxes.

.4 Engraving, where indicated:

.1 6 mm (¼") high letters filled with red paint,

.2 parallel to finished floor level.

.5 One manufacturer throughout the project.

Standard of Acceptance

- Pass & Seymour (Legrand)
- Hubbell
- Bryant Electric
- Eaton
- Leviton

3 EXECUTION

3.1 Identification

.1 Label receptacles with circuit identification using a lamacoid label with colour coding for normal, emergency and UPS source with label attached to the receptacle or the wall above the receptacle.

.2 Label receptacles in patient care areas in accordance with the latest version of CSA standard Z32:

.1 lamacoid label secured to the wall above the receptacle,

.2 engraved with the panel name and circuit number from which the receptacle is fed,

.3 lettering not less than 6 mm (¼") high,

.4 normal power: black lettering on white lamacoid,

.5 emergency power: red lettering on a white lamacoid.

.3 Provide an additional lamacoid, of matching colour, for receptacles on dedicated circuits, stating: "Dedicated Circuit".

.4 Identify receptacles, located within a patient care area but not intended for patient care use, with a nameplate stating "NOT FOR PATIENT CARE".

.5 Label pilot light switches:

.1 lamacoid label secured to the wall above the switch,

.2 engraved with the name of the load controlled,

.3 black lettering on white background.

3.2 Installation

.1 Switches;

.1 Mount switches vertically so that the switch contacts are closed when the toggle is up or, in the case of Decora switches, when the top part of the rocker is depressed.

.2 Install switches in gang type outlet box when more than one switch is required in one location.

.3 Provide separate boxes where switches are supplied from different power systems (normal and emergency).

.4 Mount switches at heights specified in Section 26 05 01 - Electrical Basic Materials & Methods unless indicated otherwise.

.5 Verify the door swing and ensure easy access before installing switches.

.6 Switches installed adjacent to dimmers: provide switches that match appearance of dimmers.

.7 Pilot light switches: run a neutral conductor to the switch.

.2 Dimmers;

.1 Where more than one dimmer is shown in the same location, mount dimmers in individual backboxes.

.2 Where remote dimmers are utilized, install associated components in accordance with the manufacturer's recommendations.

.3 Receptacles;

.1 Install receptacles in gang type outlet box when more than one receptacle is required in one location.

.2 Provide separate boxes where receptacles are supplied from different power systems (normal and emergency).

.3 Mount receptacles at heights specified in Section 26 05 01 - Electrical Basic Materials & Methods unless indicated otherwise.

.4 For each type of receptacle 20 ampere or larger, supply and hand to Owner two heavy duty caps.

.5 Connect receptacle grounding terminal to the outlet box with an insulated green bonding conductor.

.6 Verify exact position of service fittings to suit furniture layout.

.7 Do not mount receptacles directly on a column, unless column has been appropriately furred, to avoid breaking fire barrier.

.8 Where equipment is located on a rooftop, provide receptacle(s) for maintenance purposes:

(a) 15/20A weather resistant GFCI receptacle, type 5-20R,

(b) weatherproof while-in-use housing,

(c) located within 7.5 m of the equipment,

(d) mounted at least 750mm above the finished roof,

(e) supplied from a dedicated circuit,

(f) provide additional receptacles as required so that a receptacle is located within 7.5 m of each item of equipment.

.4 CONNECTRAC

.1 Install CONNECTRAC under carpet.

.2 Provide duplex receptacle where required

.3 Provide connection to system furniture whip as required.

.5 Cover Plates;

.1 Protect stainless steel cover plate finish with paper or plastic film until painting and other work is finished.

.2 Install suitable common cover plates where wiring devices are grouped.

.3 Do not use cover plates meant for flush outlet boxes on surface-mounted boxes.

.6 Install explosion proof wiring and devices in hazardous locations of Class, Division and Group as indicated on Drawings.

.7 Ground fault circuit interrupters;

.1 Mount receptacles at height indicated in Section 26 05 01 - Electrical Basic Materials & Methods unless indicated otherwise.

.2 Do not connect GFCI receptacles to provide protection to downstream receptacles, unless specifically indicated.

.8 Outlets in movable partitions;

.1 Co-ordinate installation of outlet boxes and conduits with the particular trade involved.

3.3 Testing

.1 Verify the operation of illuminated handles in switches.

.2 Verify the operation of lights on pilot light switches.

.3 Test each receptacle for correct polarity and ground continuity.

.4 Test the manual trip and reset functions of each GFCI.

END OF SECTION

WIRE AND BOX CONNECTORS 0-1000 V
26 27 28

1 GENERAL

1.1 Scope

.1 Provide wire and box connectors for wiring 1000 V and less, as shown.

1.2 Applicable Codes and Standards

.1 Product standards:

.1 CSA C22.2 No.65 Wire Connectors.

.2 CSA C22.2 No.188 Splicing Wire Connectors.

2 PRODUCTS

2.1 Materials

.1 Mechanical pressure type wire connectors:

.1 for copper conductors: current carrying parts of copper or tin plated aluminum,

.2 for aluminum conductors: current carrying parts of aluminum.

Standard of Acceptance

- Burndy
- Ilsco
- Thomas & Betts

.2 Compression type pressure wire connectors:

.1 long barrel

.2 tin plated copper for copper conductors

.3 aluminum for aluminum conductors

Standard of Acceptance

- Burndy
- Ilsco
- Thomas & Betts

.3 Twist on wire connectors:

.1 for copper wire up to and including #6 AWG,

.2 “live” spring construction,

.3 corrosion resistant spring,

.4 square wire spring construction,

.5 polypropylene cap rated for 105ºC

Standard of Acceptance

- T&B Marette
- Ideal
- 3M

.6 For damp, wet, outdoor and submersible locations: filled with silicone gel.

.4 Fixture type splicing connectors:

.1 current carrying parts of copper,

.2 sized to fit copper conductors 10 AWG or less,

.3 temperature rating of not less than 105°C

Standard of Acceptance

- Burndy
- Hubbell
- Thomas & Betts

3 EXECUTION

3.1 Installation

.1 Provide connectors in accordance with the manufacturer's recommendation for the size, quantity and type of wires.

.2 Install connectors in accordance with the manufacturer's recommendations.

.3 Remove insulation carefully from ends of conductors:

.1 where the conductor is damaged, remove the damaged portion and strip the insulation back further as necessary,

.2 where the conductor is too short, replace the conductor.

.4 For aluminum conductors, clean the conductors and immediately coat with electrical joint compound.

.5 Tighten screws of mechanical pressure type connectors in accordance with the manufacturer's recommendations. Installation to meet secureness tests in accordance with CSA C22.2 No.65.

.6 Install compression type connectors using the appropriate compression tool and die as recommended by the manufacturer. Make two crimps on each wire. Installation to meet secureness tests in accordance with CSA C22.2 No.65.

.7 Remove all traces of electrical joint compound after each connection has been made.

.8 Install fixture type connectors and tighten. Replace insulating cap.

END OF SECTION

MOLDED CASE CIRCUIT BREAKERS
26 28 16.13

1 GENERAL

1.1 Scope

.1 Low-voltage enclosed (moulded case) circuit breakers of 6000 A and less (“breakers”), for power distribution equipment, including:

.1 adjustable trip circuit breakers

.2 fused circuit breakers and high-fault protectors,

.3 instantaneous-trip circuit breakers,

.4 and accessories.

.2 This Specification does not apply to moulded case switches that do not incorporate automatic overcurrent tripping devices.

1.2 Applicable Codes and Standards

.1 Product standards:

.1 CAN/CSA C22.2 No. 5.16 (R2021) Molded Case Circuit Breakers, Molded Case Switches and Circuit Breaker Enclosures

.2 UL 489: Molded Case Circuit Breakers, Molded Case Switches and Circuit Breaker Enclosures

.3 CAN/CSA-C22.2 No. 94-M91 (R2011) Special Purpose Enclosures

1.3 Submittals

.1 Submit shop drawings and product data for products specified herein.

.1 Include time-current characteristic curves for breakers with ampacity of 200 A and over or with interrupting capacity of 22,000 A symmetrical (rms) and over at system voltage.

2 PRODUCTS

2.1 General Requirements for Breakers

.1 bolt-on moulded case circuit breaker: quick- make, quick-break type, for manual and automatic operation, for operation at 600 V or less, and a current rating not exceeding 6000 A.,

.2 common-trip breakers: with single handle for multi-pole applications,

.3 Trip-free feature,

.4 clearly indicated on/off, tripped indications

.5 current, voltage, interrupting rating in accordance with Drawings,

.6 magnetic instantaneous trip elements in circuit breakers to operate only when value of current reaches setting. Trip settings on breakers with adjustable trips to range from 5 - 10 times current rating.

.7 circuit breakers over 150A ratings to have interchangeable trips.

.8 breaker to operate by means of a solid-state trip unit with associated current monitors and self-powered shunt trip to provide adjustable inverse time current trip under overload condition, and adjustable long time, short time, instantaneous tripping for phase, ground fault and short circuit protection, with individually adjustable time and pick up settings. Ground fault pick up to be adjustable up to match frame rating) 600) 800) 1200) amps. Provide a separate zero sequence current transformer around the outgoing phase conductors for each breaker if necessary to achieve this pick-up setting,

Issued For Permit/Tender

LIGHTING
26 50 00

1 GENERAL

1.1 General Requirements

.1 Conform to Section 26 01 01, Electrical General Requirements.

.2 Conform to Section 26 05 01, Electrical Basic Materials and Methods.

1.2 Work Included

.1 Work to be done under this Section shall include furnishing of labour, materials, and equipment required for installation, testing and putting into proper operation complete Electrical systems as shown, as specified and as otherwise required. Complete systems shall be left ready for continuous and efficient satisfactory operation.

1.3 Shop Drawings and Product Data

.1 Submit shop drawings in accordance with Section 26 05 01 Electrical General Requirements - Shop Drawings and Product Data.

.2 Submit complete photometric data prepared by independent testing laboratory for luminaires where specified, for review by Engineer

.3 Photometric data to include:

.1 Total input watts, candlepower summary, candela distribution zonal lumen summary, luminaire efficiency, CIE type, coefficient of utilization, lamp type and lumen rating in accordance with IESNA testing procedures.

1.4 Requirements

.1 Luminaires shall not be delivered to building or stored therein until dry and protected space is available for proper storage of luminaires.

.2 Submit samples of luminaires which are not catalogue items for approval. Additional luminaires shall not be manufactured until sample has been approved. Each approved sample shall be retained on job site until final completion of project. Luminaires which do not match quality and workmanship of standard sample will be rejected.

.3 Finishes of luminaires, as specified in the "Luminaire List" must be maintained. Where the description of the luminaire directs a "colour/ finish to suit Architect/Owner" it is to be understood that during construction the final colour/finish will be selected. The Architect/Owner must be permitted to make their choice from a standard colour/finish range but the selected colour will apply to all of the particular type of luminaire unless otherwise specified.

.4 "Allowances" when shown, are in Canadian dollars and cover the cost of the luminaires and lamps. Allowances do not include applicable taxes, delivery to the site, handling, installation, overhead or profit.

1.5 Substitutions

.1 Luminaires included under this Section are specified by approved manufacturer and type. Furnish equipment, as specified, unless substitutions are mutually agreed upon, as follows:

.1 During the construction period, no substitutions shall be considered unless compelling reasons are given such as inability to meet delivery schedule. This reason shall not be acceptable if delay is caused by Contractor's failure to order luminaires in accordance with the schedule. In such cases, it is the Contractor's responsibility to provide luminaires as specified without delay to the project and without additional cost to the Owner.

.2 Substitutions shall be named, samples, catalogue cuts and complete photometric reports submitted, and cost savings documented. Submit a written request for proposed luminaires to be substituted to Engineer at least two weeks before the end of the bid period. Make the request an alternate, separate proposal, accompanied by complete descriptive and technical data. Indicate addition or deduction from the base bid. Substitutions proposed less than two weeks before the end of the bid period, or not including proper documentation shall not be considered. Engineer shall accept or reject proposed substitutions.

.3 Where proposed substitutions alter functional or visual design, or change the space requirements or mounting details indicated here or on the drawings, detail such changes in the proposal and include costs for revised design and construction for trades involved.

.4 Reimburse Engineer and his/her consultants for costs of evaluating proposed substitutions, after the bid period, whether or not such substitutions are accepted.

.5 Substitutions proposed shall match specified luminaire construction material as per luminaire schedule.

2 PRODUCTS

2.1 General

.1 Similar luminaires shall be products of same manufacturer.

.2 Luminaires shall be suitable for individual or continuous mounting.

.3 Supply recessed luminaires, where installed in plaster or in acoustic ceilings, complete with plaster trim frame or ring and mounting brackets.

.4 Luminaires shall be completely assembled in factory and shall be delivered to building in cartons or in palletized form, as directed.

2.2 LED Drivers:

.1 Operable from 50/60 Hz input source of 120V through 277V or 347V through 480V with sustained variations of ± 10% (voltage) with no damage to the driver.

.2 Input power factor greater than 0.90 from 20% to 100% rated load.

.3 Input current Total Harmonic Distortion (THD) less than 20% from 20% to 100% rated load.

.4 Comply with NEMA 410 for in-rush current limits.

.5 Output current regulated to ± 5% across published load range.

.6 Output ripple current at maximum output:

(a) less than 15% measured peak-average/average,

(b) less than 5% low frequency content (< 120 Hz.).

.7 Integral means of limiting surges to the LED's, based on IEEE/ANSI C62.41.2 surge characteristics:

(a) for interior applications: common mode and differential mode surge protection of 2.5kV (100kHz, 30 Ohm ring wave),

(b) for exterior applications: common mode and differential mode surge protection of 3kV (1.2/50µs, 2 Ohm combination wave).

.8 Able to tolerate sustained open circuit and short circuit output conditions without failure, without need for external fuses or trip devices. Auto resetting.

.9 No visible flicker when tested with flicker wheel.

.10 For dimming systems: no visible flicker, when tested with flicker wheel, across the full dimming range.

.11 Minimum operating temperature:

(a) -20˚C (-4˚F) for interior applications,

(b) -40˚C (-40˚F) for exterior applications.

.12 Metallic enclosure for optimal thermal performance.

.13 Integral thermal foldback to reduce driver power if case temperature exceeds rated maximum temperature.

.14 Compatible with the dimming system.

.15 Class A sound rating.

.16 Rated for UL Damp and Dry locations.

.17 For downlights: compact enclosure with integral studs allowing the driver to be mounted on the outside of the luminaire or on a junction box, without the need of an additional enclosure.

.18 For linear luminaires: slim profile with height ≤ 25 mm (1 inch) and width ≤ 30 mm (1.2 inch).

.19 Integral colour-coded connectors.

.20 Free of any Polychlorinated Biphenyls (PCBs).

.21 Labelled compliant with the latest edition of the following standards:

(a) CSA-C22.2 No. 223, Power Supplies with Extra-Low Voltage Class 2 Outputs,

(b) CSA C22.2 No 250-13, Light Emitting Diode (LED) Equipment for use in Lighting Applications.

.22 Comply with applicable requirements of the Federal Communications Commission (FCC) rules and regulations, Title 47 CFR part 15, for Non-Consumer equipment.

.23 RoHS compliant.

.24 Warranty: 5 years

Standard of Acceptance

- Advance
- Litetech
- Universal
- VLM (Italy)
- Lumi-Drives (UK)
- Osram
- AC Electronics
- EldoLED

2.3 Lamps

.1 Light Emitting Diodes

.1 1.2 or 3 watts per LED.

.2 Available in 2700K, 3000K, 3500K and 4000K correlated colour temperature (CCT) packages. CCT tolerances to remain within a 3-step MacAdam ellipse and to maintain a CRI of ≥80, and an R_9 > 50.

.3 Colour temperature and lumen output for each luminaire per luminaire schedule. Comply with IESNA LM-79 testing procedures.

.4 Maximum temperature at the base of the “LED cap” mounted to the substrate to be controlled to ensure full lamp life.

.5 Minimum lumen maintenance of L_{70} @ 50,000 hours. Comply with IESNA LM-80 and LM-21 testing procedures.

.6 LED's of the same type to be from the same manufacturing batch.

.7 Capable of continuous dimming, flicker and noise free, from 10-100% lumen output.

.8 Provide certified test results for each type of LED used on the project.

.9 Warranty: 5 years

Standard of Acceptance- Lamp Acceptance:

- Cree
- Lumileds
- Nichia
- Osram
- GE
- Samsung
- Bridgelux

2.4 Exit Signs

.1 Exit signs to CSA 22.2 No. 141 Emergency Lighting Equipment.

.2 Internally illuminated by white L.E.D. sources.

.3 Single or double face as shown.

.4 Each face to show a green "running man" pictogram.

.5 With directional arrows as shown.

.6 Directional arrows to be white.

.7 Visibility of signs to ISO 3864-1 Graphical Symbols – Safety Colours and Safety Signs – Part 1: Design Principles for Safety Signs in Workplaces and Public Areas.

.8 Dimensions of signs, pictograms and symbols to ISO 7010 Graphical Symbols – Safety Colours and Safety Signs – Safety Signs Used in Workplaces and Public Areas.

.9 With 12 Volt two wire DC emergency power input.

.10 With internal battery backup using sealed nickel cadmium batteries of sufficient capacity to power the sign for not less than 2 hours.

2.5 Warranty of Luminaires

.1 Standard Warranty: 5 years

.1 On site replacement material, fixture, luminaire (LED module, driver etc), finish and workmanship. On site replacement includes transportation, removal, installation of new products and labour costs. Finish warranty to include against failure or deterioration such as peeling, fading, chalking, blistering or cracking.

.2 Replacement material warranty for defective or non-starting LED source assemblies.

.3 Replacement material warranty on all power supply units.

.4 Replacement warranty for luminaires inadequately-maintained illuminance levels at end of warranty period, as prorated from levels expected at end of useful life.

.5 Warranty period to begin on date of possession. The supplier will provide the site Owner with appropriate signed warranty certificates. Site Owner to receive certificates prior to final payment or date of possession.

3 EXECUTION

3.1 Installation

.1 Locate and install luminaires as indicated.

.2 Locate hangers on tile centres or intersections. Mount recessed, troffers and surface mounted luminaires in or on full tiles.

.3 Verify quantity of luminaires before placing orders.

.4 Verify ceiling types with the latest revised Architectural Drawings and order luminaires to suit the correct ceiling.

.5 Check luminaires and mountings for their electrical and physical characteristics in relation to conditions due to building construction and mechanical equipment. Make necessary adjustments to luminaires or hanging arrangement without expense to Owners. Give notification at time of shop drawings and before construction if decision on necessary changes is required.

.6 Co-operate with other trades to ensure proper installation of luminaires.

.7 Carefully align luminaires, shown in continuous lines or rows, so that rows appear as straight lines.

.8 Mount luminaires perfectly level or plumb. Luminaires shall fit tightly to ceiling without showing a space or light leak between frame and ceiling.

.9 Take down any improperly installed luminaires and re-install without expense to Owner.

.10 Standard octagonal boxes may be supplied where conduits feeding luminaires in finished areas are exposed on ceiling if hanger canopies entirely cover outlet boxes and are neatly notched for conduit. Otherwise, provide cast conduit outlet boxes with a diameter larger than canopies.

.11 Attach boxes or hickies directly to poured concrete with 6mm (¼") minimum diameter bolts and lead expansion anchors where luminaires are suspended directly from concrete slabs. Use 8mm (5/16") minimum bolts through precast slabs, welded to 100mm x 100mm (4" x 4") minimum, 3.5mm (10 gauge) plate above slabs.

.12 Do not mount luminaires above pipes, ducts or equipment. In event of unavoidably tight locations, provide hangers to clear obstructions. Check layouts of other trades on job and plan co-operatively. Luminaires in any room shall hang at one height. Obtain approval before any changes are made to layouts shown.

.13 All luminaires mounted in or on ceilings shall be supported independently of ceiling by means of chains.

.14 Provide continuous 12mm x 38mm (½" x 1½") channel above the ceiling, where luminaires are suspended or mounted on furred ceilings. Fasten luminaires to channel with two 6mm (¼") minimum diameter studs with minimum 1220mm (4'- 0") on centre.

.15 Luminaires installed in or on "T" bar ceilings shall be equipped with safety chains anchored in an approved manner to the floor slab or roof structure above. Luminaires shall have two chains, each supporting two corners of the luminaire. Chain shall be #10 Tensile jack chain, installed as noted below.

.16 Chain shall be No. 10 Tensile jack chain, bright zinc coated, with a strength of 180 kg (400 lbs.) where luminaires are indicated to be chain hung. Attachments shall be made using a No. 10 "S" hook. Caddy fasteners may be used where applicable. "S" hooks must be closed after installation.

.17 Industrial luminaires where suspended shall be 12mm (½") conduit hangers and ARB ball aligners. Length and location shall clear equipment, ducts and pipes. Metal strut (Flexibar, Unistrut, Eaton B-Line strut, T&B Superstrut) may be used for mounting of luminaires in mechanical areas and electrical rooms.

3.2 Luminaires

.1 Provide luminaires exactly as shown and as specified in the following schedule. Luminaires shall be complete with necessary accessories and lamps at time of acceptance.

.2 All luminaires shall be ULC or CSA certified.

.3 Each luminaire installed on branch circuits with voltage exceeding 150 volts-to-ground shall be provided with a disconnecting means integral to the luminaire that simultaneously opens all circuit conductors between the branch circuit conductors and the supplying ballast(s) and marked in a conspicuous, legible and permanent, manner adjacent to the disconnecting means, identifying the specific purpose in accordance with the Canadian Electrical Code Part 1 Rule 30-308(4).

3.3 Exit Signs

.1 Connect Exit signs to a dedicated 120 Volt circuit and provide a lock on device on the branch circuit breaker.

.2 Connect 12 Volt DC circuit to the emergency power input.

.3 Include in the Contract an additional twenty (20) spare luminaires including circuit breaker and installation accounting for an average of 40 meters of wire in conduit for each additional luminaire and connection to an emergency circuit. For bidding purposed, allow that these luminaires can be added at any time during the construction process including and up to occupancy of client, in any location as directed on site. Once the project is awarded there will be no additional cost to the client for installation of these luminaires. Any luminaires not installed shall be turned over to the client.

3.4 Luminaire List

.1 Luminaire manufacturers are listed in alphabetical order and not in order of preference.

3.5 Standard Sheets

.1 Comply with the requirement indicated in the H. H. Angus standard sheets listed below, as if described in full herein.

16501	Luminaire Type Mounting Detail

3.6 Equipment Schedules

.1 The following equipment schedules form part of this specification section.

.1 Schedule A: Lighting Fixtures

(a) luminaire types are listed in alphabetical order and not in order of preference.

SCHEDULE A – Lighting Fixtures

Title	Description	Lamp Schedule
LR-01	Recessed in grid ceiling LED architectural troffer. Nominal dimensions of 2' x 2' x 4½". Luminaire housing in galvanized steel with frosted acrylic lens. Luminaire to be complete with all necessary mounting brackets, etc. for a complete working installation. Contractor shall verify ceiling type prior to ordering. • Driver: Dimming driver up to 10% dimming flicker free (digital control). • Rated life shall be 60,000 hrs. @ 70% lumen output. • Luminaire shall be suitable for installation in a T-bar Ceiling. • Warranty: 5 years and meet L70, IES LM-80 and IES LM-79 testing. Voltage: 120V *Manufacturer:* Mark Lighting: #WHSPR-2X2-90CRI-35K-3300LM-MIN10-MVOLT-YBC-ZT. Peerless-Electric Lighting. Axis Lighting. Paco Lighting.	27W LED 3,300 lumen package 90+ CRI 3500 K
LT-01	LED surface mounted strip luminaire. Nominal dimensions of 48" x 2.99" x 2.23". Luminaire housing in heavy gauge cold rolled steel housing, equipped with stainless steel fasteners and polycarbonate lens stand-up to abuse, damp location rated. Luminaire to be complete with all necessary mounting brackets, etc. for a complete working installation. Contractor shall verify ceiling type prior to ordering. • Rated life shall be 60,000 hrs. @ 70% lumen output. • Warranty: 5 years and meet L70, IES LM-80 and IES LM-79 testing. Voltage: 120V *Manufacturer:* Lithonia Lighting: #ZL1D-L48-SMR-3000LM-FST-MVOLT-35K-80CRI. Peerless-Electric Lighting. Paco Lighting. Signify Lighting.	36W LED 3,000 lumen package 80+ CRI 3500 K

Title	Description	Lamp Schedule
LT-02	Recessed in ceiling 4" round lensed LED down light. Nominal aperture is 4 $^{5}/_{16}$" aperture x 6$^{5}/_{8}$" in depth. Luminaire housing in galvanized steel with extruded aluminum heat sink with regressed light source, wet location listed. Luminaire will have granulated powder coat finish with a clear semi-specular reflector and trim. Luminaire to be installed in drywall or T-Bar ceiling. Luminaire to be complete with all necessary mounting brackets, corner fittings, etc. for a complete working installation. • Driver: Dimming driver up to 10% dimming flicker free (digital control). • Rated life shall be 60,000 hrs. @ 70% lumen output. • Warranty: 5 years and meet L70, IES LM-80 and IES LM-79 testing. Voltage: 120V *Manufacturer:* Gotham Lighting: #EV04-35-20-AR-LSS-WD-MVOLT-GZ10-90CRI. Elite Lighting. Paco lighting. Alphabet lighting.	20W LED 2000 lumen package 90+ CRI 3500 K
LT-02A	Recessed in ceiling 4" round lensed LED down light. Nominal aperture is 4 $^{5}/_{16}$" aperture x 6$^{5}/_{8}$" in depth. Luminaire housing in galvanized steel with extruded aluminum heat sink with regressed light source, wet location listed. Luminaire will have granulated powder coat finish with a clear semi-specular reflector and **black** trim. Luminaire to be installed in drywall or T-Bar ceiling. Luminaire to be complete with all necessary mounting brackets, corner fittings, etc. for a complete working installation. • Driver: Dimming driver up to 10% dimming flicker free (digital control). • Rated life shall be 60,000 hrs. @ 70% lumen output. • Warranty: 5 years and meet L70, IES LM-80 and IES LM-79 testing. Voltage: 120V *Manufacturer:* Gotham Lighting: #EV04-35-20-XX-LSS-WD-MVOLT-GZ10-90CRI. Elite Lighting. Paco lighting. Alphabet lighting.	20W LED 2000 lumen package 90+ CRI 3500 K

Title	Description	Lamp Schedule
LT-02B	Recessed in ceiling 4" round lensed LED down light. Nominal aperture is 4 $^{5}/_{16}$" aperture x 6$^{5}/_{8}$" in depth. Luminaire housing in galvanized steel with extruded aluminum heat sink with regressed light source, wet location listed. Luminaire will have granulated powder coat finish with a clear semi-specular reflector and trim. Luminaire to be installed in drywall or T-Bar ceiling. Luminaire to be complete with all necessary mounting brackets, corner fittings, etc. for a complete working installation. • Driver: Dimming driver up to 10% dimming flicker free (digital control). • Rated life shall be 60,000 hrs. @ 70% lumen output. • Warranty: 5 years and meet L70, IES LM-80 and IES LM-79 testing. Voltage: 120V *Manufacturer:* Gotham Lighting: #EV04-35-20-AR-LSS-WD-MVOLT-GZ10-90CRI. Elite Lighting. Paco lighting. Alphabet lighting.	13.7W LED 1500 lumen package 90+ CRI 3500 K
LT-03	Suspended lensed cylinder direct LED luminaire. Nominal dimensions of 8" x 3". Luminaire to have extruded aluminum housing, integral heat sink with fins for thermal management through conductive and convective cooling, and 80° reflector. LED driver is mounted in direct contact with the casting to promote low operating temperature and long life. Housing is sealed against moisture and environmental contaminants. Listed for damp location. • Driver: Dimming driver up to 10% dimming flicker free (digital control). • Rated life shall be 60,000 hrs. @ 70% lumen output. • Warranty: 5 years and meet L70, IES LM-80 and IES LM-79 testing. Contractor is to inspect the site conditions for proper mounting/complete working installation. Voltage: 120V *Manufacturer:* Lumenwerx Lighting: #AE3CYP-D-8IN-FTMW-80DEG-80CRI-35K-120V-14W-D1-1C-DMNC-XX. Lumenpulse Lighting Gotham Lighting.	14 W LED 1545 lumen package 90+ CRI 3500 K

Title	Description	Lamp Schedule
LT-04	Recessed in ceiling 4" round lensed LED down light. Nominal aperture is 4 $^{5}/_{16}$" aperture x 6$^{5}/_{8}$" in depth. Luminaire housing in galvanized steel with extruded aluminum heat sink with regressed light source, wet location listed. Luminaire will have granulated powder coat finish with a clear semi-specular reflector and trim. Luminaire to be installed in drywall or T-Bar ceiling. Luminaire to be complete with all necessary mounting brackets, corner fittings, etc. for a complete working installation. • Driver: Dimming driver up to 10% dimming flicker free (digital control). • Rated life shall be 60,000 hrs. @ 70% lumen output. • Warranty: 5 years and meet L70, IES LM-80 and IES LM-79 testing. Voltage: 120V *Manufacturer:* Gotham Lighting: #IVO4-ADJ-15LM-35K-90CRI-60D-MIN10-MVOLT-ZT-XX-AR-LSS-X Elite Lighting. Paco lighting. Alphabet lighting.	16 W LED 1500 lumen package 90+ CRI 3500 K
LT-05	Decorative pendant luminaire. Nominal dimensions of 72" length. Luminaire to have illuminated tube, made of machined frosted polymer and aluminum caps and light tray. Coordinate Shade Colour with Architect during submittals. Contractor to verify ceiling for proper mounting, prior to ordering. Luminaire to come with all necessary accessories for a complete working installation. Voltage: 120V *Manufacturer:* Arancia: FRICI 2 P93-72-LN-A-U-0-XX-XX-XX	8w/ft LED 748lm/ft lumen package 90+ CRI 3500 K
LT-06A	Decorative pendant luminaire. Nominal dimensions of 97" length x 2" width x 3" height. Linear body with linear frosted lens. Coordinate Shade Colour with Architect during submittals. Contractor to verify ceiling for proper mounting, prior to ordering. Luminaire to come with all necessary accessories for a complete working installation. Voltage: 120V *Manufacturer:* A-N-D Light: Pipeline V2	44W LED 3546lms total 90+ CRI 3500 K

Title	Description	Lamp Schedule
LT-06B	Decorative pendant luminaire. Nominal dimensions of 239” length x 2” width x 3” height. Linear body with linear frosted lens. Coordinate Shade Colour with Architect during submittals. Contractor to verify ceiling for proper mounting, prior to ordering. Luminaire to come with all necessary accessories for a complete working installation. Voltage: 120V *Manufacturer:* A-N-D Light: Pipeline V2	44W LED 8866lms total 90+ CRI 3500 K
LT-07	Recessed wall grazer in ceiling linear LED luminaire. Nominal dimensions of $3^{7}/_{16}$” overall width x $3^{1}/_{4}$” height. Refer to architectural drawings for exact lengths. Luminaire shall be in continuous run. Luminaire to be located on perimeter of ceiling grid line. Contractor to verify ceiling system type prior to ordering. Refer to architectural drawings for ceiling type details. Luminaire shall come complete with all necessary mounting hardware and accessories for a complete working installation. • Fixture to be installed in dry wall ceiling. • Driver: Dimming driver up to 10% dimming flicker free (digital control). • Rated life shall be 60,000 hrs. @ 70% lumen output. • Warranty: 5 years and meet L70, IES LM-80 and IES LM-79 testing. Voltage: 347V *Manufacturer:* Axis Lighting: #B2SQPRLED- 500-80-35-GZ-FL-X-X-120-DP-XX. ALW Lighting. Mark Lighting.	4.15 W/ft LED 500 lm/ft package 80+ CRI 3500 K
LT-08	Decorative pendant luminaire. Nominal dimensions of 36” X 18”. Coordinate Shade Colour with Architect during submittals. Contractor to verify ceiling for proper mounting, prior to ordering. Luminaire to come with all necessary accessories for a complete working installation. Voltage: 120V *Manufacturer:* Luxxbox: HI-L-XX-35-UNV-XX	49 W LED 5133 LM package 90+ CRI 3500 K

Title	Description	Lamp Schedule
LT-09	Decorative pendant luminaire. Nominal dimensions of 10” height x 7” diameter. Coordinate Shade Colour with Architect during submittals. Contractor to verify ceiling for proper mounting, prior to ordering. Luminaire to come with all necessary accessories for a complete working installation. Provide LED lamps as per manufacturer recommendations. Voltage: 120V *Manufacturer:* Luminaire Authentik: Forma 008-LA00.	7 W LED 700 LM package 90+ CRI 3500 K
LT-10	Decorative wall sconce luminaire. Nominal dimensions of 5” diameter x 3.3” depth. ADA compliant. Luminaire to have dimpled smoked glass diffuser lens. Contractor to verify installation location for proper mounting, prior to ordering. Luminaire to come with all necessary accessories for a complete working installation. Provide LED lamps as per manufacturer recommendations. Coordinate Shade Colour with Architect during submittals Voltage: 120V *Manufacturer:* RBW Lighting: DP-WS-S2-AA04-35-1_10V_UNV	17.5 W LED 482 LM package 90+ CRI 3500 K
LT-11	Custom Backlit box. Coordinate with architectural drawings for details. Voltage: 120V *Manufacturer:* Luminii.	LED

Title	Description	Lamp Schedule
LT-12	Surface mounted in ceiling cove LED linear luminaire. Nominal dimensiosn of 0.30" height x 0.83" width. Refer to drawings and site verify for lengths. Luminaire to be in continuous run and fully illuminated. Luminaire to come with extruded aluminum channel and frosted lens. Luminaire to have 120° light distribution angle. Luminaire shall come complete with all necessary mounting hardware and accessories for a complete working installation. • Driver: Dimming driver up to 10% dimming flicker free (digital control). • Rated life shall be 60,000 hrs. @ 70% lumen output. • Warranty: 5 years and meet L70, IES LM-80 and IES LM-79 testing. Voltage: 120V *Manufacturer:* Luminii: KL-XX-HE64MO-35K-F-XX-XX-XX-XX Acolyte Lighting	3.8W/ft LED 528lm/ft package 3500K +90 CRI
X1	L.E.D. edge lit exit sign for surface mounting, with extruded aluminum housing in brushed aluminum. With three styles of illuminated panels: - without arrow - with arrow to the right - with arrow to the left With "UP" arrow where indicated. With canopy mounting bracket suitable for ceiling, wall or end mounting. Voltage: 120V Manufacturers: AimLite "RPEL Series" Beghelli "Ottica RM Series" Emergi-Lite "EAE Series" Lumacell "LAE Series" Stanpro "RMEA Series" Dual-Lite, Ready-Lite, Uniglo equivalent (subject to approval)	

Title	Description	Lamp Schedule
H1	Surface mounted LED emergency light double remote heads, thermoplastic housing. Luminaire to be complete with all necessary mounting brackets, etc. for a complete working installation. Voltage: Contractor to verify existing battery voltage on site. Manufacturer: Beluce: #SR2-2-LED-MR16 Emergi-Lite Lumacell	LED 2x7 Watts

END OF SECTION

FIRE ALARM INITIATING AND INPUT DEVICES
28 46 11

1 GENERAL

1.1 Scope

.1 Provide fire alarm system addressable initiating devices as shown.

1.2 Related Sections

.1 Without limiting the scope of work or applicability of other specification sections, the work under this section directly integrates with or refers to the following specification sections:

.1	28 46 21.11	Addressable Fire Alarm System

1.3 Definitions

.1 Terminology used in this specification is based upon CAN/ULC S524 definitions. Refer to S524 for a complete glossary of terms.

1.4 Applicable Codes and Standards

.1 Installation codes and standards:

.1 Refer to Specification section 28 46 21.11

.2 Product Standards:

.1	CAN/ULC-S528	Standard for Manual Stations for Fire Alarm Systems, Including Accessories
.2	CAN/ULC-S529	Smoke Detectors for Fire Alarm Systems
.3	CAN/ULC-S530	Standard for Heat Actuated Fire Detectors for Fire Alarm Systems

1.5 Submittals

.1 Submit product data sheets for materials specified herein.

.2 Submit shop drawings for engineered detection solutions (air aspiration, linear heat, beam detectors) including:

.1 Site specific floor plan drawings showing all system components.

.2 support details,

.3 temperature/smoke activation ratings.]

2 PRODUCTS

2.1 General

.1 All Fire Alarm System components shall be listed to applicable ULC and/or CSA standards for use with the proposed fire alarm system.

.2 Fire initiating devices shall be of the fire alarm system manufacturer product line or their approved products except where specified herein.

2.2 Addressable Manual (Pull) Stations

.1 Listed to ULC-S528.

.2 Manual stations:

NOT FOR CONSTRUCTION

.1 rigid construction, open circuit, pull lever type and finished in red enamel,

.2 Operating method: [Single stage fire alarm][Two stage fire alarm suitable for insertion of an evacuation key].

.3 to be suitable for mounting in a 103 mm (4 in.) square recessed box with plaster ring in finished areas and surface mounted in unfinished areas,

.3 Manual stations to create an address on an identifiable loop.

2.3 Protective Cover for Manual Stations

.1 Tamperproof clear polycarbonate cover with horn.

2.4 Addressable Heat Detectors

.1 Listed to CAN/ULC-S530.

.2 Automatic detectors to be of the following types:

.1 addressable type,

.2 57.2°C (135°F), fixed temperature and 8.3°C (15°F) per minute, rate of rise,

.3 93°C (200°F), fixed temperature only (if not available as addressable device, provide conventional device with monitoring module),

.4 as otherwise indicated on drawings.

.3 Detectors to have suitable mounting plates with finish ring.

.4 Provide conventional non-addressable heat detectors in unheated areas with an individual addressable module mounted in a heated part of the building.

2.5 Addressable Smoke Detectors

.1 Listed to CAN/ULC-S529.

.2 Remote adjustable sensitivity, with environmental condition monitoring function (“dirty”, “excessive dirty” messages),

.3 Incorporate an LED or lamp latched circuit to indicate the signal operation of the unit.

.4 Power requirement: operate on 24 volts DC and be protected against electrical transients and electromagnetic interference.

.5 Detectors to be equipped with NO/NC contacts to operate ancillary devices, where applicable.

.6 Detectors to be equipped with a fine mesh insect screen to prevent contamination of the detection chamber by insects.

.7 Recessed smoke detector to be complete with necessary shroud and flush mounting hardware.

2.6 Linear Type Heat Detectors

.1 Listed to ULC-S530.

.2 Detection cable:

.1 digital linear heat detection cable in a polymer jacket and designed to detect heat anywhere along the cable length.

.2 suitable for connection to addressable monitoring module.

.3 cable-model specific detection activation temperatures:

(a) Typical heat detection applications: 68°C (155°F)

NOT FOR CONSTRUCTION

(b) High-temperature applications: 105°C (220°F),

.4 cable detection temperature marked on outside of cable insulation jacket,

.5 listed for cable-to-cable spacing of not less than 10 m (30 ft) intervals,

.6 with internal supporting wire where long support spans are required.

.3 Manufacturer services:

.1 systems specific to the project requirements to be designed by a manufacturer authorized vendor.

Standard of Acceptance

- Protectowire - PHSC-EPC
- Safe Cable - fig. LHD (cable) with PVC sheath

2.7 Duct Mounted Smoke Detectors

.1 Listed to CAN/ULC-S529.

.2 Air duct type smoke detectors:

.1 photoelectric type smoke detector, and an airtight housing assembly, mounted on the side of the duct complete with sampling tubes and supporting framework.

.2 operating principle: while fans are running, the air sample tubes induce a continuous cross-sectional sampling of the air flows from the ventilation duct, through the detector, and then returned to the duct.

.3 air stream velocity operating range: from 2.5 m/sec to 18 m/sec,

.4 ability to monitor, test and reset the detectors under actual air flow conditions.

.5 remote alarm lamp or LED to indicate the signal operation of the detector,

.3 Protect duct mounted smoke detectors during construction with a dust-bag, which will be removed at the time of verification.

.4 Manufacturer to include site visits to direct detailed locations of duct-mounted smoke detectors.

.5 Air duct type smoke detector to create an address on identifiable loop.

.6 Outdoor rated enclosure with 120V heater when installed on exterior ductwork.

2.8 Beam Type Smoke Detectors

.1 Listed to CAN/ULC-S529.

.2 System Description

.1 system consists of a receiving (Imager) and emitting (Emitters) components for installation along the perimeter of the protected space

.2 dual wavelength imaging principles to determine the smoke obscuration at known locations, while providing a high resistance to false alarms and obstructions

.3 intruding objects that sufficiently reduce the ability of the system to measure smoke obscuration will be identified as a trouble

.4 imagers that are saturated by sunlight or strong light sources will trigger a trouble but never an alarm

.3 Imager (receiving component)

.1 parameters as follows:

(a) sensitivity settings for fire alarm threshold

(b) selection for particle size discrimination (dust rejection on or off)

NOT FOR CONSTRUCTION

(c) alarm latching or non-latching

.2 different Imagers will be available covering different horizontal viewing angles

.3 on-board memory for diagnostic purposes of minimum 10,000 events

.4 Emitters

.1 two available intensities, for long range or short-range coverage

.2 activate automatically once aligned and their position fixed and secured

.5 Signal Annunciation, Inputs and Outputs

.1 locations of alarms and troubles shall be identified through the user interface

.2 automatic reset and manual reset. Troubles are always reset automatically when the fault has disappeared

.3 initiating device circuit (IDC) interface, C/O contacts, to report alarms and trouble to fire alarm system.

.4 connection to a remote indicator (remote LED) shall be provided, which will activate when a fire alarm is initiated

.5

.6 equipment to provide addressability to a fire alarm.

Standard of Acceptance

° Xtralis - fig. OSI(Imager) and OSE (Emitter)

2.9 Air Sampling Type Detectors

.1 Listed to CAN/ULC-S529.

.2 Each sample port of an air sampling-type detector to be conspicuously labeled as a sample port.

.3 The sample transport time from the farthest sampling port to the detector is to not exceed 120s.

.4 The air aspiration smoke sensor system panel assembly shall include the following:

.1 LED’s indicating alarms on each of the sampling tubes

.2 Power Indicator

.3 Fault Indicator

.4 Reset switch to clear all alarms

.5 Output alarm contacts

.6 Output ‘system trouble’ contacts

.5 Programming to be via a unit mounted keypad or via the fire alarm system computer. Each sampling tube shall be individually programmable to any of ten sensitivity settings.

.6 Manufacturer services:

.1 systems specific to the project requirements to be designed by a manufacturer authorized vendor

Standard of Acceptance

° Xtralis - fig.VESDA-E VEP

2.10 Addressable Monitor Modules

.1 Supervision of Class B normally-open dry contact initiating device circuits with end-of-line resistor.

NOT FOR CONSTRUCTION

.2 Mount to standard 1-gang box.

.3 Include wall plate with LED viewing ports.

3 EXECUTION

3.1 General

.1 Installation of the Fire Alarm system components to be in accordance with the current applicable edition and all amendments of CAN/ULC-S524 and as specified herein.

3.2 Installation of Duct-mounted Smoke Detectors

.1 Duct-mounted smoke detectors to be installed in the main supply duct, downstream of the mixing box, filters, and fan. Where air duct type smoke detectors cannot be installed in the main supply duct, they are be installed in each of the branch lines as close as practical to the supply fan downstream of the mixing box, filters, and fan.

.2 Position of smoke detector on drawings is approximate only; determine final position smoke detector in accordance with the explicit requirements of the manufacturer's installation instructions, including proximity to upstream obstructions to airflow such as elbows and other duct fittings.

3.3 Installation of Beam Detectors

.1 Location and detector spacing of beam type smoke detectors to be in accordance with the manufacturer's published installation instructions.

3.4 Installation of Linear Heat Detectors

.1 Install linear heat detectors in accordance with the manufacturers or their authorized vendor's project specific shop drawings.

.2 Support linear cables at locations as shown on shop drawings.

3.5 Installation of Air Sampling Type Detectors

.1 Location and detector spacing of air sampling type detectors to be in accordance with the manufacturer's published installation instructions.

.2 Install air sampling pipe networks so that they:

.1 are airtight,

.2 are permanently fixed in place,

.3 are conspicuously labelled as smoke detector sampling pipe,

.4 have warning signs not to disturb or alter the sampling pipe affixed at direction changes, each side of the wall, floors, or similar barriers and at intervals on piping not more than 6 m (20 ft) apart, and

.5 have inlet ports not less than 100 mm (4 in.) from the wall or ceiling.

END OF SECTION

Master revised: August 7, 2025

NOT FOR CONSTRUCTION

ADDRESSABLE FIRE ALARM SYSTEM
28 46 21.11

1 GENERAL

1.1 Scope

.1 Provide a complete Fire Alarm System, including installation, testing, and putting into proper operation as shown.

1.2 Related Sections

.1 Without limiting the scope of work or applicability of other specification sections, the work under this section directly integrates with or refers to the following specification sections:

.1	21 05 33	Heat Tracing for Fire-Suppression Piping
.2	21 30 13	Electric-Drive Fire Pump
.3	25 07 05.13	Building Automation Smoke Management System
.4	26 05 49.13	Seismic Restraint for Electrical Services
.5	26 05 49.23	Seismic Qualification for Electrical Equipment
.6	26 07 03	Wiring for Mechanical Services
.7	26 08 11	Testing of Integrated Fire Protection and Life Safety Systems
.8	26 08 15	Electrical Commissioning
.9	28 46 11	Fire Alarm Initiating and Input Devices
.10	28 46 23	Fire Alarm Notification and Output Devices
.11	28 46 90	Fire Alarm System Sequence of Operation.

1.3 Definitions and Abbreviations

.1 Terminology used in this specification is based upon CAN/ULC S524 definitions. Refer to CAN/ULC-S524 for a complete glossary of terms.

.1 ***Building Automation System*** – the control system which controls and monitors building systems other than a fire alarm system.

.2 ***Local Authority (Authorities)*** – means a regulatory authority for building safety and/or fire safety.

.2 The following abbreviations apply to this section:

.1 ***AHJ*** - Authority Having Jurisdiction

.2 ***CACF*** - Central Alarm and Control Facility

.3 ***DCL*** - Data Communication Link

.4 ***DCC*** - Display and Control Centre

.5 ***FAC*** - Fire Alarm Computer

.6 ***FAS*** - Fire Alarm System

1.4 Applicable Codes and Standards

.1 Installation codes and standards:

.1	CSA C22.1	Electrical Safety Code, as amended in the jurisdiction of the Work,
.2	CSA C282	Emergency Electrical Power Supply for Buildings
.3	CAN/ULC-S524	Installation of Fire Alarm Systems

.4	CAN/ULC-S536	Inspection and Testing of Fire Alarm Systems
.5	CAN/ULC-S537	Verification of Fire Alarm Systems
.6	CAN/ULC-S573	Installation of Ancillary Devices Connected to Fire Alarm Systems
.7	CAN/ULC-S1001	Integrated Systems Testing of Fire Protection and Life Safety Systems
.8	NFPA 13	Installation of Sprinkler Systems
.9	NFPA 20	Installation of Stationary Pumps for Fire Protection

.2 Product standards:

.1	CAN/ULC-S527	Standard for Control Units for Fire Alarm Systems
.2	CAN/ULC-S533	Egress Door Securing and Releasing Devices
.3	CAN/ULC-S548	Devices and Accessories for Water Type Extinguishing Systems
.4	ULC-S139	Standard Method of Fire Test for Evaluation of Integrity of Electrical Cables

1.5 Qualified Tradesperson

.1 Installing electricians to be qualified, licensed, and from a recognized firm with an established reputation in this field.

.2 Fire alarm technicians to be CFAA Registered.

1.6 System Requirements

.1 All system components to be listed by a Standards Counsel of Canada accredited testing laboratory to applicable standards adopted for Canada for use with the Fire Alarm System.

.2 All system components to comply with applicable provisions of the building code applicable to the location of the Work, CAN/ULC-S524, and meet the requirements of the local AHJ for building safety.

.3 General design and performance requirements:

.1 FAS to comply with ULC and as specified herein.

.2 FAS to be an integrated Fire Alarm and Voice Communication system.

.3 FAS to be [single stage] [two-stage], addressable, fully supervised, and microprocessor based.

.4 FAS to utilize distributed transponders to cover all areas of the facility as indicated on the drawings.

.5 Transponders are to be interconnected with a data communication link (DCL) between them so that all alarms are reported to the DCC, to the remote annunciators, and to the fire alarm computer and printer.

.6 Provide Class A detection loops as indicated on drawings and schedules]

.7 FAS capacity to account for the installation of all devices plus 20% capacity. This is to apply to each detection loop, annunciation circuit, and address allocations in each of the control panels, transponders, and annunciators.

.8 FAS to be modular in its design to allow for future expansion.

.9 FAS to be programmed to initiate a series of predefined control actions in accordance with Specification section 28 46 90.

.4 Central Alarm Control Facility (CACF):

.1 Fire Alarm equipment installed in the CACF to include:

(a) DCC (refer to section 2.3),

(b) Passive graphic,

1.7 Seismic Qualification

.1 Seismically qualify (certify) the following equipment specified herein:

.1 DCC

.2 Transponder Units

.2 The seismic qualification of the above-listed equipment is to conform to Specification section 26 05 49.23 for the following seismic qualification level and certification method:

.1 Attachment seismic qualification (Level I) and Structural EFRS seismic qualification (Level II): by static analysis, dynamic analysis or shake table testing

.3 The following equipment specific seismic force parameters are to be used:

C_p	A_r	R_p	h_x/h_n
1.00	1.00	1.25	1.0

.4 For purpose of certification the building height amplification factor (NBCC) $h_x/h_n = 1.0$ is to be used.]

1.8 Submittals

.1 Submit shop drawings to include:

.1 product data sheets for system components highlighted to indicate the specific products, features, and functions,

.2 overall system riser wiring diagram identifying control unit, initiating zones, signaling circuits; identifying terminations, terminal numbers, conductors and raceways,

.3 fire alarm system sequence of operation,

.4 fire alarm graphic drawing,

.5 system power and battery charts with performance graphs and voltage drop calculations to assure that the system will operate in accordance with the prescribed backup time periods and under all voltage conditions per ULC Standards and applicable Building Code.

1.9 Operation and Maintenance Data

.1 Provide operation and maintenance data in accordance with the requirements of Division 01 and as follows.

.2 Operation and maintenance data to include:

.1 a copy of reviewed shop drawings with corrections completed and marks removed except review stamps,

.2 instructions for complete fire alarm system to permit effective operation and maintenance,

.3 a list of spare parts for system,

.4

.5 detailed maintenance instructions for control equipment and each device type, maintenance schedule in accordance with CAN/ULC-S536,

.6 troubleshooting guide for control panels and devices,

.7 a copy of the fire alarm verification certificate and verification report

.8 warranty certificates for fire alarm system, batteries, ancillary devices, and other similar items, including battery suppliers date coding for batteries.

.9 the name, address, and telephone number of service representative of manufacturer to be contacted during warranty period,

.10 any additional fire alarm equipment information required for the facility Fire Safety Plan.

.3 Update shop drawing riser diagram to "As-Built" condition at the completion of the project. Submit both a printed drawing, a PDF file, and an AutoCAD file.

.4 Documentation required by CAN/ULC S573 to be maintained on site for ancillary device installations:

.1 A completed and detailed description for all ancillary device installations including, but not limited to the following:

(a) description and function of the ancillary device(s);

(b) sequence of operation;

(c) installation instructions;

(d) operating instructions; and

(e) maintenance and testing instructions.

.2 The plans of the building showing the location and identification of each ancillary device.

.3 Documentation showing the interconnection of each ancillary device or system connections to field devices, control units, transponders, and external power supplies.

.4 Documentation for ancillary devices and circuits serving smoke control and venting systems including building plans that indicate the type and location of all smoke control and venting equipment (fans, dampers, etc.)

2 PRODUCTS

2.1 General

.1 All Fire Alarm System components shall be listed to applicable ULC and/or CSA for use with the proposed fire alarm system.

.2 The system is to include all necessary output signals to connect to the Owner's designated monitoring company.

.3 Peer to peer network interface hardware and software components to enable data exchange and direct communications with the Building Automation System.

.1 The vendor to include for all costs for making the software data stream available at a RS232 port or RS485 port as necessary for use by the Building Automation System. The port to be configured to provide all output activity on a device-by-device basis.

.2 Coordinate protocol and data interpretation from the fire alarm to the Building Automation System.

Standard of Acceptance

- Edwards (EST4)
- Johnson Controls (Simplex 4100ES)
- Siemens (Desigo Fire Safety Modular)
- Honeywell Notifier (ONYX Series NFS2-3030C)
- Mircom (FleX-Net)

2.2 Cabinets

.1 All fire alarm cabinets are to contain the necessary components to make the system operate as specified.

.2 Cabinet construction: modular design with hinged locked doors and finished in manufacturers standard colours.

2.3 Display and Control Centre (DCC)

.1 DCC includes:

.1 transponder units,

.2 annunciator,

.3 voice communication system control;

(a) master emergency telephone and associated selector switches,

(b) master voice paging microphone,

(c) all control switches and hardware required for the operation of the voice communication system. [secondary DCC only requires “all call”]

.4 Control switches including but not limited to:

(a) [manually actuated alarm signals in the building selectively to any zone or zones,

(b) signal silence.

.5 LED per zone annunciator.

2.4 Fire Alarm Transponder

.1 Each transponder will have stand-alone capability and degraded mode capability.

.2 Each transponder is to operate from a 120 VAC 60 Hz power supply. An internal integrated power conditioner which includes surge suppressor and circuitry for the elimination of spikes or voltage transients is to be provided for the protection of system components.

.3 LCDs to annunciate status of system.

.4 The transponders are to be interconnected with Data Communication link Style C.

.5 The alarm receiving supervisory circuits connected to a local transponder are to be supervised for open circuit conditions.

.6 The signal circuits connected to a local transponder are be supervised through an end of line resistor.

.7 The transponder to contain the amplifiers required for the voice communication system in the area served by that transponder;

.1 amplifiers to be sized to accommodate the speaker load plus an additional 20% spare capacity for future additions,

.2 the amplifiers to be continuously supervised for proper operation.

.8 The transponder to contain the tone generating modules required for the "alert" and "alarm" signals for the speaker circuits.

2.5 Passive Graphic Annunciator

.1 LED indicators for each zone as shown.]

.2 Each passive graphic annunciator to include;

.1 a panel trim common with the annunciator,

.2 a plot plan showing complete floor plans of each floor with all stairs, elevator shafts and entrances.

.3 Colours to separate the various building elements and zones to be as follows:

.1 building outline, columns, column lines – Black,

.2 building names – Black,

.3 stairs and elevators – Red,

.4 zones - Off-White,

.5 zone limits – Black,

.6 roads – Slate.

.4 The physical relationship of plot plan and complex site plan to be maintained in both proportion and position and drawn to an approximate scale of 1:200.

.5 The number of each zone, as shown on the annunciator, to be centered on the Drawing for each floor in 10 mm (3/8 in.) high red letters. Plot Plan to be secured to annunciator without visible hardware.

.6 Annunciator location in respect to location in building to be designated by the term "YOU ARE HERE".

.7 Overall arrangement and maximum dimensions to be arranged to fit the manufacturer's standard cabinet.

2.6 Annunciators

.1 Annunciator construction:

.2 rigidly constructed and reinforced as required with overall trim, and concealed fasteners.

.1 8 event sequential LCD display to indicate the exact description of each addressable detection device.

.2 panel trim:

(a) in finished areas to be flush mounted with metal trim and concealed hinges and fasteners.

(b) in unfinished areas to be finished in fire alarm red.

.3 a lamp test switch, trouble buzzer, silencing switch, and ring back.

.4 wiring to be supervised.

2.7 Voice Communication - Voice Paging System

.1 Function;

.1 to give the firefighters the capability of providing intelligible evacuation instructions to all or selected areas of the building from the DCC.

.2 General;

.1 The system is to:

(a) incorporate a complete arrangement of speakers, microphones, amplifiers, control module and power supplies,

(b) provide floor by floor, and each stairwell][as per drawings evacuation switches in addition to "All-Call".

(c) be integral to the fire alarm system.

.3 Requirements;

.1 ULC listed hand-held microphone and hook switch assembly. The microphone to be a background noise-cancelling hand-held unit designed for close talking operation.

.2 Speaker zone selector switches and visual trouble indication for zones as shown on drawings, and evacuation switches for emergency voice announcements in specific areas.

.3 The voice communication system will have the following features:

(a) sound pre-announce tone,

(b) silence fire alarm signaling devices during pre-announce tone and emergency broadcasting,

(c) ability to connect remote telephone handset to the voice communication system,

(d) "Call-in" light assembly for each selector switch.

.4 Supervision:

(a) supervision of all audio circuits to pre-amplifier, amplifier, handset power supply, speakers, and handsets,

(b) supervision of open or short circuits will cause the appropriate trouble light to be illuminated and will sound a trouble signal on the fire alarm system,

(c) supervision of standby power supply system including loss of power with connection to separate fire alarm trouble signal.

.5 The system to be tri-channel to provide simultaneous Alert tone, Alarm tone and Voice messages.

2.8 Voice Communication - Emergency Telephone System

.1 General operating function:

.1 lifting a remote emergency telephone from its cradle is to sound a telephone signal, light a "call in" lamp and light the appropriate zone lamp at the DCC to indicate the location of the "call in" telephone. A "call placed" tone is to be audible at the remote emergency telephone to indicate the system is operating,

.2 lifting the master telephone is to silence the telephone signal and selecting the appropriate zone switch at the DCC is to silence the call placed tone at the remote emergency telephone and allow two-way communication,

.3 lifting a remote emergency telephone in a different zone is to also light the "call in" lamp and the appropriate zone lamp. A call placed tone is to sound on that remote emergency telephone until that zone is selected.

.2 Master emergency telephone:

.1 telephone handset and hook switch assembly complete with 2 m (6 ft) of coiled red cord. Telephone handset to be finished in fire alarm red,

.2 telephone selector switch for each handset complete with visual trouble indication,

.3 provides communication with individual telephones to be on a one-to-one basis or any group of telephone zones, and to be controlled through selector switches.

.3 Remote emergency telephone:

.1 suitable for flush mounting with a lockable break glass door assembly,

.2 engraved with 25 mm (1") letters to read "EMERGENCY FIRE TELEPHONE",

.3 complete with a voice-cancelling transmitter, hook switch assembly, 2 m (6 ft) long retractable cord.

2.9 Voice Communication - Public Address

.1 General operating function:

.1 general paging zones to be [floor by floor][as indicated on drawings] in addition to “all call”.

.2 the low-level paging input to be connected under normal operating conditions but is to be disconnected in an emergency situation to enable the firefighter to make broadcast announcements. Alarm functions to take priority.

.2 The voice communication system to be integrated with the low-level paging system in the following manner:

.1 the speakers installed in the general areas (corridors, waiting rooms, lobby's, service areas) to act as low-level paging speakers to locate personnel.

.2 when the voice communication microphone is lifted from the cradle, the paging input to the speakers is to be muted and the speakers to be automatically re-connected to the microphone input,

.3 when the voice communication microphone is replaced into its cradle, the low-level paging speakers to be automatically reconnected to their original paging input.]

Provide a public address zone selector console in the Main Security Room.

.3 Provide an interface to allow the system to be accessed from the telephone system.

2.10 Voice Communication – Amplifiers

.1 General:

.1 provide a separate amplifier for each voice paging [and public address] zone.

.2 Amplifier type:

.1 solid state type compatible with the pre-amplifier,

.2 to be adequately sized to provide the sound pressure level specified for speakers.

.3 Amplifier features:

.1 adequate RMS power rating. Initial amplifier loading to not exceed 80% in order to allow for future system expansion. Calculations to assume each speaker is connected at 0.5 watt,

.2 frequency response with 1 dB from 200 - 15,000 Hz,

.3 noise level minimum of 80 dB below rated output,

.4 each audio power amplifier to have integral audio signal de-multiplexers, allowing the amplifier to select any one of eight (8) digitized audio channels as directed by system programming,

.5 audio amplifiers to be power limited and protected from short circuits conditions on the audio circuit wiring. Each amplifier output to provide a selectable 25/70 Vrms output, suitable for connection to emergency speakers.

2.11 Voice Communication Circuits

.1 Provide a minimum of two voice communication circuits for each voice paging [and public address] zone.

.2 Provide communication circuits for emergency telephone.

.3 All communication circuits to be supervised for open, short, or ground fault conditions.

.4 Maintain supervision of wiring during Public Address Announcements.

2.12 Fire Alarm Computer (FAC)

.1 General:

.1 provide fire alarm computer capable of monitoring system performance,

.2 provide most current ULC listed computer for use with the fire alarm system.

.2 FAC functions:

.1 be configured with all graphics and floorplans showing all fire alarm devices and zones.

.2 be an ancillary device and not primary annunciation.

.3 interfacing hardware and software suitable to annunciate all alarms and monitor the status of the individual sensors and set parameters, as allowed by the applicable codes.

.4 Full control features including ability to bypass individual addressable devices, produce maintenance reports, and have configurable viewing windows.

.5 software levels of access to be provided through a series of passwords. Access to a particular software level will allow the use of all commands in that level plus all commands in the lower levels,

.6 multiple levels of priority for displaying alarms,

.7 include a help menu and error messages to assist the user in the operation of the system.

.3 Messaging:

.1 messages to display the following information:

(a) point name,

(b) type of alarm,

(c) time and date,

(d) message defined for the point including a graphic package with all floor plans displays indicating exact location of the device reporting the alarm and instructions to assist the operator in performing his duties.

.4 UPS:

.1 provide a five-minute backup UPS for the FAC[and printer].

.5 FAC capable of secure remote access by vendor.

2.13 Secondary Power Supply

.1 The system to be supplied from one or more 24 VDC power sources integral to the fire alarm system (i.e., dedicated batteries) complete with automatic battery charger at each transponder location.

.2 The batteries to be sufficiently sized to operate the system under supervisory load conditions (standby load) for not less than 24 consecutive hours, with sufficient power remaining to operate the system, including ancillary devices powered from the fire alarm system, under full load conditions for at least 2 hours without recharging.

.3 Battery charging circuits to be sufficiently sized to charge fully depleted batteries to 70% of their maximum capacity within 12 hours.

.4 Loss of the secondary power supply is to result in a specific trouble signal on the fire alarm system.

2.14 Input (Alarm Initiating) Circuits

.1 Alarm receiving circuits and addressable line cards for alarm initiating devices, such as manual pull stations, smoke detectors, combination smoke detectors/ heat detectors (Intelligent type), heat detectors, and water flow switches as shown on schedules and drawings.

2.15 Output Alarm Circuits

.1 Alarm output circuits for audible signals such as speakers, horns and visual indicators as shown.

.2 Alarm output circuit:

.1 includes necessary amplifiers and tone generator modules for electronic audible alarm devices as required.

.2 capable of being manually tested on a circuit-by-circuit basis by the CPU using a keypad or a keyboard.

.3 capable of being manually disconnected on a circuit-by-circuit basis at the transponder for testing purposes.

.4 a trouble signal is to sound when any output circuit is manually disconnected.

2.16 Fire Alarm Wires and Cables

.1 General requirements:

.1 wiring sizing and type to be as recommended by fire alarm system manufacturer,

.2 type: copper, not less than #18 AWG,

.3 wiring for speaker circuits to be twisted pair. Shielded or as recommended by manufacturer.

.2 Non-fire rated:

.1 fire alarm wiring:

(a) type FAS, 300V, 105°C,

(b) to be installed in conduit.

Standard of Acceptance

- Nexans
- General Cable
- Belden
- Southwire

.2 Armoured fire alarm cable:

(a) type FAS, 300V, 105°C,

(b) aluminum interlocked armour

Standard of Acceptance

- Securex II FAS 105

.3 Fire rated:

.1 fire rated armored cables:

(a) 2-hour fire rating with hose stream, listed to CAN/ULC S139,

(b) type FAS, 300V, 90°C.

Standard of Acceptance

- VITALink (Marmon, Comtram)

.2 fire rated mineral Insulated cables:

(a) 600V mineral insulated cable, as recommended by fire alarm manufacturer.

Standard of Acceptance

- Pyrotenax (nVent)

3 EXECUTION

3.1 General

.1 Install all control panels, graphics, and equipment required for a fully operational system as shown on drawings or as otherwise required.

.2 FAS to be installed under the supervision of manufacturer.

.3 At the completion of the Work, the building is to be left with a complete fire alarm and voice communication system accepted by the Local Authorities and meeting all applicable codes. System will be left ready for continuous and satisfactory operation.

3.2 Wiring

.1 Wiring material selection:

.1 main DCL wiring interconnecting transponders: in 2-hour rated fire compartment or interconnected with 2-hour fire rated cables.

.2 wiring between transponder to the first initiating device or output device: 2-hour fire rated, or utilize isolators as outlined in CAN/ULC-S524 if the transponder is in a different fire alarm zone than the device it is serving.

.3 wiring for annunciators: solid copper 2-hour fire rated, serial link communication conductor as recommended by the manufacturer.

.4 wiring to firemen's handsets: solid copper 2-hour fire rated and laid out in a horizontal radial or star topology from the transponder location to each handset on each floor.

.5 power wiring to each fire alarm transponder: 2-hour fire rated,

.6 all other wiring: non-fire rated or fire rated.

.2 Connect wiring for input alarm initiating circuits and output alarm circuits corresponding to the same fire alarm zone to the same transponder to ensure stand-alone operation is maintained.

.3 Align alarm devices and signals, where grouped together, one above the other.

.4 Provide fire alarm monitoring from each emergency generator control panel for “generator trouble”, “generator running” and “Generator not in auto” signals.

.5 Provide the wiring necessary for the public address input, including microphone and switch and/or telephone interface, to the voice communication system.

.6 Equip raceways with a separate ground conductor and connect to nearest ground bus.

.7 Wire and annunciate signals from fire pumps or sprinkler pumps as required by the building code and its references to NFPA 13 and NFPA 20.

.8 Connect each control panel, and transponder to the nearest life safety branch panel on the respective floor. Provide a "red" coloured circuit breaker, sized as required, and distinctly labelled. Provide a "Lock On" device on the breaker.

.9 Wire signal circuits alternatively such that no two adjacent signal devices are on the same circuit.

.10 Provide a minimum of two speaker circuits per voice paging [and public address] zone.

.11 Provide line isolators (on both sides) when crossing fire alarm zone boundaries.

3.3 Installation of Input Circuits and Initiating Devices

.1 Initiating devices to conform to Specification section 28 46 11.

.2 Protect smoke detectors during construction with a dust cover which is be removed at the time of verification.

.3 Wire alarm receiving circuits in a Class A, 2 wire configuration with the loop returning to the control panel via a separate conduit. Provide a conduit run from the respective control panel to the first and last device on the loop.

.4 Supervise all alarm receiving circuits for open, short, or ground fault conditions.

.5 Do not load circuits above 80% of capacity to allow for future additions.

.6 Install manual pull-stations as shown and in accordance with the following:

.1 1200 mm above the finished floor level, measured from the centre of the manual pull station,

.2 be adjacent to and centered on either the length or the width of a clear floor area of 1350 x 800 mm,

.3 install the manual pull station on the latch side of a single door at a maximum lateral distance of 1500 mm from the door opening, except where installed adjacent to an electromagnetically locked door or a door utilized for crossover access, install within 500mm.

.7 Provide a Lamacoid label for all monitoring modules indicating address and device monitored.

3.4 Installation of Output Circuits and Devices

.1 Notification and output devices to conform to Specification section 28 46 23.

.2 Wire alarm output circuits in a class B, 2 wire configuration.

.3 Supervise all alarm output circuits for open, short, or ground fault conditions by the use of an end of line resistor.

.4 Do not load circuits above 80% of capacity to allow for future additions.

.5 In finished areas, install speakers flush with the ceiling. Secure the back box to the runners above the ceiling. Install adequate supports for the speaker back boxes covered by the covers.

.6 In stairways and equipment spaces, surface-mount speakers and/or horns.

.7 Install wall-mounted audible signal devices at least 150 mm (6 in) below the ceiling, measured to the top of the device.

.8 Provide Lamacoid label for all control modules indicating address.

3.5 Installation of End of Line Resistors

.1 Where Class B wiring is specified or permitted, install the end-of-line resistors in an outlet box with stainless steel cover plate.

3.6 Installation of Voice Communication System

.1 Provide interconnecting wiring between control module, control panel and handsets, as required.

.2 Provide wiring to handsets located at the stairwells in such a manner that the handsets at each stairwell are connected to a different circuit.

.3 Handsets to be mounted between 1350 and 1500 mm (53 and 59 in.) to centerline above finished floor.

.4 Mount handsets in suitable box enclosures, flush mounted unless otherwise noted.

.5 Provide interconnection hardware and software required to integrate building telephone system with public address system to allow for paging through the telephone system. Provide a minimum of 8 dedicated phone lines for this application.

3.7 Door Holders/Closers

.1 Automatic door holders/closers hardware are provided under Division 08 of the Work. 120V Power for automatic door holders/closers provided under Division 26.

.2 Connect all door holders into the FAS such that doors close automatically upon actuation of the FAS.

.3 Circuits for door holders (hold-open devices) and door closers to be such that the door controlled by the device are to close upon failure of power or data communication associated with the control of that device (i.e., fail-safe). Emergency power supply is therefore not required for door holders (hold-open devices) and door closers.

3.8 Magnetic Locks

.1 Provide dual contact pull stations adjacent to magnetically locked door;

.1 contact 1: signal to fire alarm system

.2 auxiliary contact 2: to directly to release the magnetic lock.

.2 Mount door release pull stations in accordance with the requirements for FAS pull stations as specified in article “Installation of Input Circuits and Devices”.

.3 In addition to the manual pull station release, connect all magnetic locks so they are released by the fire alarm system in accordance with Specification section 28 46 90.

3.9 Sprinkler/Standpipe System Connections

.1 Provide addressable monitoring modules to each sprinkler flow, supervisory, and standpipe system switches and connect to fire alarm zones indicated. Connect to nearest associated transponder.

.2 Connect relay of sprinkler pump, auxiliary booster or special service pump to fire alarm zone indicated, for trouble condition.

3.10 Elevator Interface Connections

.1 Provide control relays modules to each elevator machine room for indication of:

.1 main recall floor lobby smoke detectors,

.2 elevator lobby area smoke detectors (excluding main recall floor),

.3 elevator hoist-way top,

.4 elevator hoist-way pit,

.5 elevator machine/control room smoke detectors.

3.11 Wet Pipe System Heat Tracing

.1 Provide electrical supervision monitoring module to indicate a loss of power to a heat tracing cable that is installed to heat:

.1 standpipe piping,

.2 sprinkler line as part of a fire suppression system,

.3 an exit or means of egress to keep it free of ice and snow.

.2 Heat tracing of these systems provided under specification section 21 05 33 or 23 83 43 as applicable.

3.12 Control of HVAC Equipment for Smoke Control and Smoke Venting

.1 Direct control of HVAC equipment, including fans and dampers, as part of a smoke control or smoke venting system is performed by the Building Automation System under Division 25 of the Work.

.2

3.13 Control of ancillary devices

.1 Where power to an ancillary device is provided from the fire alarm system, the power supply equipment and wiring shall be installed in accordance with CAN/ULC S573 and CAN/ULC-S524.

.2 Where power to an ancillary device or system is provided independent of the fire alarm system, the power supply equipment and wiring shall be installed in accordance with CAN/ULC S573 and CSA C22.1.

.3 Where control of an ancillary device is from multiple sources (ex. BMS and fire alarm), a warning label is to be installed at the ancillary device with the following wording:

.1 “THIS DEVICE IS CONTROLLED BY MORE THAN ONE SOURCE”

.4 Relays used for elevator recall are to be labelled “ELEVATOR RECALL RELAY” and note the specific recall function provided.

3.14 System Verification

.1 Verify the fire alarm system in accordance with CAN/ULC-S537. Verification is to be performed by the FAS manufacturer/vendor and the electrical installers.

.2 Provide any necessary equipment, test apparatus, ladders and scaffolding as required.

.3 Adjust system and components as required to ensure system fully operating as intended.

3.15 System Verification and Testing of Multi-Phase Occupancy (Partial Occupancy)

.1 Provide separate verification of applicable portions of the FAS for each phase of a multi-phase occupancy program of the building at different times during construction of the Work ("Phased Occupancy").

.2 Provide inspection and testing of the FAS to support each Phase Occupancy in accordance with the following process:

.1 conduct verification of the portion of the Fire Alarm System affected for each Phased Occupancy, in accordance with CAN/ULC-S537,

.3 Submit a CAN/ULC-S537 verification report for each Phased Occupancy area and a final CAN/ULC-S537 verification report for all project spaces at construction completion.

3.16 Testing of Integrated Fire Protection and Life Safety Systems

.1 Comply with the requirements of specification section 26 08 11 for the testing of the integration of the FAS with other life safety and fire protection systems.

.2 All verification and testing requirements specified in this section must be complete and free of deficiencies prior to commencing Testing of Integrated Fire Protection and Life Safety Systems.

3.17 Local Authorities Demonstration

.1 Only after the testing and verification task is completed, and all deficiencies rectified, notify the Owner, Consultant and representatives of the Local Authority and demonstrate the proper functioning of the system. This will include, but not be limited to:

.1 detailed demonstration of each operable device,

.2 removal of individual speakers from their wiring connections to prove that adjacent speakers operate properly and subsequent reinstallation of speakers on selected floors,

.3 interfacing of voice communication and fire alarm systems,

.4 operation of individual handsets,

.5 operation of ceiling speakers.

3.18 Commissioning Program

.1 Comply with the project commissioning requirements in accordance with specification section [01 91 00] [and] [26 08 15].

.2 The verification and testing requirements specified in this section may be concurrent with, or conducted separately from, the commissioning program, as coordinated with the Contractor and the commissioning agent.]

3.19 Demonstration and Training

.1 Provide three (3) instances of four (4) hour training sessions and demonstration by fire alarm equipment manufacturer to train operational personnel in use and maintenance of fire alarm system.

End of Section

FIRE ALARM NOTIFICATION AND OUTPUT DEVICES
28 46 23

1 GENERAL

1.1 Scope

.1 Provide fire alarm system notification and output control devices as shown.

1.2 Related Sections

.1 Without limiting the scope of work or applicability of other specification sections, the work under this section directly integrates with or refers to the following specification sections:

.1 28 46 21.11 Addressable Fire Alarm System

1.3 Definitions

.1 Terminology used in this specification is based upon CAN/ULC S524 definitions. Refer to S524 for a complete glossary of terms.

1.4 Applicable Codes and Standards

.1 Product standards:

.1 CAN/ULC-S525 Audible Signal Devices for Fire Alarm System and Signaling Systems, Including Accessories

.2 CAN/ULC-S526 Visible Signal Devices for Fire Alarm Systems and Signaling Systems, Including Accessories

.3 CAN/ULC-S541 Speakers for Fire Alarm Systems, Including Accessories

1.5 Submittals

.1 Submit product data sheets for materials specified herein.

2 PRODUCTS

2.1 General

.1 All Fire Alarm System components shall be listed to applicable ULC and/or CSA for use with the proposed fire alarm system.

.2 Annunciation and output control devices to be of the fire alarm system manufacturer product line or their approved products except where specified herein.

2.2 Speakers

.1 Listed to CAN/ULC-S541.

.2 Speakers for the fire alarm system to have the following features:

.1 acoustically treated enclosure,

.2 line matching transformer with ¼, ½, 1, and 2 Watt taps,

.3 permanent magnet type speaker,

.4 wide dispersion bandwidth in hemispherical pattern, in both horizontal and vertical planes,

.5 minimum frequency response of 400 to 4000 Hz,

NOT FOR CONSTRUCTION

.6 high fidelity type speaker, 520 Hz type.

.3 For flush-mounting as shown, and provided with speaker enclosures where shown as surface mounted.

.4 Unit to be complete with hook-up terminals with screw-type connection.

2.3 Horn Speakers

.1 Listed to CAN/ULC-S541.

.2 Surface mounted with a weatherproof gland connection.

.3 Dispersion angle of 120°H x 80°V.

.4 Selectable weather protected taps of 1, 2, 4, & 7.5 watts.

.5 Finish colour: fire alarm red.

.6 Power supply: Powered by fire alarm output circuit.

2.4 Fire Alarm Bell

.1 Listed to CAN/ULC-S525.

.2 150 mm (6 in) in diameter.

.3 Surface mounted.

.4 Finish colour: fire alarm red.

Power supply: Powered by fire alarm output circuit.

2.5 Visible Signal Devices (Strobe Lights)

.1 Listed to CAN/ULC-S526.

.2 Performance:

.1 flash rate: one flash per second in alarm mode,

.2 the words "FIRE" to appear on the lens or attached nameplate.

.3 effective luminous intensity in a sleeping room or bed space: not less than 175 candela (cd).

.4 effective luminous intensity in all other areas: not less than 15 candela (cd) and selected to meet ULC S524 for the installed location.

2.6 Combination Signal Appliances

.1 Combination audible and visual signaling devices to conform to individual articles specified herein.

2.7 Addressable Control Relay Modules

.1 Form “C” dry relay contact to control external appliances.

.2 Contact rating: 2A @ 24V, 0.5A @ 120V.

.3 Designed to be installed in a standard 1-gang box.

.4 Include wall plate with LED viewing ports.

2.8 Alarm Signal Appliances

.1 For remote indication of alarm condition.

.2 Alarm lamp fixtures: high intensity (200 mcd) LED lamps, with screw-type terminals.

NOT FOR CONSTRUCTION

.3 Mounting plate: single gang-box plate.

2.9 Fire Do Not Enter Signs

.1 Listed to CAN/ULC-S526

.2 Extruded aluminum body and aluminum faceplate, with LED bulbs.

.3 Warning message:

.1 "FIRE DO NOT ENTER"

.2 red in colour,

.3 to be visible only when the sign is illuminated.

.4 Power supply: from fire alarm system.

3 EXECUTION

3.1 General

.1 Provide notification and output devices as shown.

.2 Installation of the fire alarm system components to be in accordance with the current applicable edition and all amendments of CAN/ULC-S524 and as specified herein.

3.2 Speaker Installation

.1 Initially set speaker taps to be ½ W. Verify suitability of sound levels in each area and adjust tap to suit.

.2 Speaker baffles to be held in place with approved fasteners.

.3 Speakers to be flush mounted unless otherwise noted.

.4 Speaker enclosures in stairwells to be suitable for surface mounting.

3.3 Visible Signal Devices Installation

.1 Where there are more than two strobe lights in a corridors or room in the same field of view, adjust units to flash in synchronization regardless of whether the strobe light is served from one or more control units / transponders.

.2 Suspend or mount ceiling-mounted strobe lights at not more than 9000mm above the finished floor.

.3 Mount wall-mounted strobe lights such that the entire lens is not less than 2000mm and not more than 2400 mm above the finished floor.

3.4 Addressable Control Relay Module Installation

.1 Mount control relay modules in a standard 1-gang box.

3.5 Remote Alarm Signal Appliances Installation

.1 Provide alarm signal appliances directly connected to initiating devices that require remote annunciation

.2 Mount remote indicating alarm lamps in a 1-gang box.

END OF SECTION

NOT FOR CONSTRUCTION

FIRE ALARM SEQUENCE OF OPERATION
28 46 90

1 GENERAL

1.1 Scope

.1 FAS to be programmed to initiate a series of predefined control actions as per the defined sequence of operations and as further detailed in Appendix A: Cause & Effect Matrix

1.2 Definitions

.1 Terminology used in this specification is based upon CAN/ULC S524 definitions. Refer to S524 for a complete glossary of terms.

.2 The following terms apply to this section:

.1 ***Alarm Signal*** - a signal transmitted throughout a zone or zones or throughout a building to advise occupants that a fire emergency exists.

.2 ***Alert Signal*** - a signal to advise designated persons of a fire emergency.

.3 ***Supervisory Signal*** – A visual and audible indication of the off-normal status of equipment that has been installed for the protection of life and property.

.4 ***Trouble Signal*** - a visual and audible indication of equipment failure, circuit failure, fault condition or operational malfunction.

2 PRODUCTS

2.1 Not Used

3 EXECUTION

3.1 Single Stage Fire Alarm System Sequence of Operations

.1 System Operation on Supervisory Signal

.1 A supervisory signal is initiated by any of the following conditions:

(a) operation of a supervised valve of a sprinkler or standpipe system,

(b) loss of power to any special service pumps for the sprinkler system,

(c) emergency generator running, not in auto, or trouble,

(d) fire pump loss of power, alternate power source, running, trouble,

(e) activation of tamper device.

.2 Supervisory Sequence of Operations:

(a) each annunciator is to identify the item causing the supervisory signal, Signal to be latching or non-latching as required by ULC S524.

(b) the supervisory condition to be displayed on the fire alarm computer.

.2 System Operation on Trouble Signal

.1 A trouble signal is initiated by any of the following conditions:

(a) short, ground fault or open circuit in any fire alarm conductor, data communication cable or field device,

(b) loss of 120 VAC 60 Hz power supply to the control unit, DCC, annunciator or any transponder,

(c) fault in the voice communication system hardware,

(d) removing detector from its base,

NOT FOR CONSTRUCTION

.2 Trouble Sequence of Operations:

(a) each annunciator is to identify the item causing the trouble signal,

(b) the trouble buzzer on the annunciators is to sound,

(c) the trouble condition to be displayed on the fire alarm computer. Trouble condition to remain on the screen until acknowledged,

(d) the time date and the trouble condition to be logged on the printer,

(e) a subsequent trouble signal to re-activate the trouble alarm sequence,

(f) trouble conditions to not interfere with supervision of the system,

(g) trouble condition to not be capable of being cleared until fault is rectified.

(h) [Transmit trouble signal to central monitoring station.]

.3 System Operation on Alarm Signal

.1 A Single Stage Alarm is initiated by the any of the following conditions:

(a) operation of a manual pull station,

(b) operation of an automatic fire detector,

(c) operation of a sprinkler flow switch or sprinkler control panel,

(d) operation of a kitchen hood system.

.2 Sequence of operations:

(a) sound an alarm signal on all audible [and visible] signal devices in the system,

(b) Release all electromagnetic locks.

(c) Override motion sensor activated power door operators installed on doors in a fire separation,

(d) transmit signal to central monitoring station,

(e) Provide alarm indication to the Building Automation System.

(f) Shut down audio/sound entertainment systems

3.2 Two-Stage Fire Alarm System Sequence of Operations

.1 System Operation on Supervisory Signal

.1 A supervisory signal is initiated by any of the following conditions:

(a) operation of a supervised valve of a sprinkler or standpipe system,

(b) loss of power to any special service pumps for the sprinkler system,

(c) emergency generator running, not in auto, or trouble,

(d) fire pump loss of power, alternate power source, running, trouble,

(e) activation of tamper device.

.2 Supervisory Sequence of Operations:

(a) each annunciator is to identify the item causing the supervisory signal, Signal to be latching or non-latching as required by ULC S524.

(b) the supervisory condition to be displayed on the fire alarm computer.

.2 System Operation on Trouble Signal

.1 A Trouble Signal is initiated by any of the following conditions:

(a) operation of a supervised valve of a sprinkler or standpipe system,

NOT FOR CONSTRUCTION

(b) short, ground fault or open circuit in any fire alarm conductor, data communication cable or field device,

(c) loss of 120 VAC 60 Hz power supply to the control unit, DCC, annunciator or any transponder,

(d) loss of power to any special service pumps for the sprinkler system,

(e) fault in the voice communication system hardware,

(f) emergency-generator running,

(g) emergency-generator trouble,

(h) removing detector from its base,

.2 Trouble Sequence of Operations:

(a) each annunciator is to identify, as a separate supervisory zone, the item causing the trouble signal,

(b) the trouble buzzer on the annunciators is to sound,

(c) the trouble condition to be displayed on the fire alarm computer. Trouble condition to remain on the screen until acknowledged,

(d) the time date and the trouble condition to be logged on the printer,

(e) a subsequent trouble signal to re-activate the trouble alarm sequence,

(f) trouble conditions to not interfere with supervision of the system,

(g) trouble condition to not be capable of being cleared until fault is rectified,

(h) an audible trouble signal may be manually silenced by authorized personnel.

(i) [Transmit trouble signal to central monitoring station.]

.3 System Operation on First Stage:

.1 A First Stage Alert is initiated by the any of the following conditions:

(a) operation of a manual pull station,

(b) operation of an automatic fire detector,

(c) operation of a sprinkler flow switch or sprinkler control panel,

(d) operation of a kitchen hood system.

.2 Stage 1 (Alert) sequence of operations:

(a) A trouble inhibit circuit to be initiated to suppress any trouble signals during Stage 1.

(b) Sound an audible alert signal at 20 strokes per minute for not less than one minute as per Appendix A.

(c) Activate visual signals as per Appendix A.

(d) Release all electromagnetic locks.

(e) Override motion sensor activated power door operators installed on doors in a fire separation,

(f) Transmit signal to central monitoring station.

(g) Provide visual indication of the fire condition and location at the CACF, all Fire Alarm Computer Terminals, annunciators, and all transponders.

(h) Type, location, time and date of alarm condition to be recorded by the fire alarm system printer.

(i) Doors normally held open through magnetic door holders are to be released [per floor][per building].

(j) Actuation of a manual station adjacent to a door with an electromagnetic lock will directly release the electromagnetic lock.

(k) Provide alert (stage 1) indication to the Building Automation System.

NOT FOR CONSTRUCTION

.4 System Operation on Second Stage

.1 A Second Stage Alarm is initiated by the any of the following conditions:

(a) Five minutes elapses without an alert signal being acknowledged.

(b) The key switch is operated in any two-stage fire alarm manual pull station.

.2 Stage 2 (Alarm) sequence of operations:

(a) Sound an audible alarm signal (Three pulse temporal pattern conforming to ISO 8201) for general alarm until reset.

(b) Activate visual signals as per Appendix A.

(c) [Release all electromagnetic locks.]

(d) Transmit signal to central monitoring station.

(e) Provide visual indication of the fire condition and location at the CACF, all Fire Alarm Computer Terminals and all fire alarm annunciator panels.

(f) Provide visual indication at all LCD annunciators.

(g) Provide alarm (stage 2) indication to the Building Automation System.

(h) [Shut down audio/sound entertainment systems]

3.3 Silencing of audible signals:

.1 Inhibit general paging systems for not less than 30s of the initial fire alarm broadcast.

.2 After the alert or alarm signal has initially sounded for not less than 30s the general paging system will silence the alert and the alarm signal while voice instructions are being transmitted.

.3 Visible signal devices will continue to emit a visible signal while voice instructions are being transmitted.

3.4 Elevator Operation

.1 Upon activation of initiating devices serving areas listed below, respective elevator group elevators recall to appropriate floor:

.1 Main recall floor lobby smoke detectors

.2 Elevator lobby area smoke detectors (excluding main recall floor)

.3 Elevator Hoist Way Top

.4 Elevator Hoist Way Pit

.5 Elevator Machine/Control Room smoke detectors

.2 Elevators are controlled by activation of devices listed above only and are not to be recalled on stage 1 or stage 2 which do not include initiation of these devices for the respective elevator group.

NOT FOR CONSTRUCTION

END OF SECTION

Master revised: August 7, 2025

APPENDIX A: CAUSE AND EFFECT MATRIX

NOT FOR CONSTRUCTION