Wilfrid Laurier University

Campus Library Building
Faculty of Education – Level 07

75 University Avenue West
Waterloo, ON N2L 3B5

PROJECT MANUAL

Divisions 00 – 28

Issue for Permit / Tender
2026-10-29

Owner:	
Architect:	HOK, INC 480 University Avenue, Suite 1100 Toronto, Ontario M5G 1V2
Mechanical, Electrical, Plumbing	H.H. Angus and Associates Ltd.
Fire Protection Engineers	H.H. Angus and Associates Ltd.

Section Number	Section Name *(DR)	Pages	Date Issued / Revised
Procurement and Contracting Requirements Group			
INTRODUCTORY INFORMATION			
00 01 01	Project Title Page*3	1	OCT 29, 2026
00 01 10	Table of Contents*3	1-3	OCT 29, 2026
00 01 10	Table of Contents*5*6*7	1-3	OCT 29, 2026
BIDDING REQUIREMENTS (under separate cover)			
CONTRACTING REQUIREMENTS (under separate cover)			
GENERAL REQUIREMENTS			
01 10 10	Project Requirements*3	1-126	OCT 29, 2026
SCHEDULES			
09 06 00	Legend of Materials	1-2	OCT 29, 2026
09 06 00	Legend of Products	1-2	OCT 29, 2026
ENGINEERING REQUIREMENTS			
20 00 00	Common Works for Mechanical*5	1-205	OCT 29, 2026
21 00 00	Fire Suppression*5	1-21	OCT 29, 2026
22 00 00	Plumbing*5	1-69	OCT 29, 2026
23 00 00	Heating, Ventilation, and Air Conditioning Systems*5	1-124	OCT 29, 2026
25 00 00	Building Automation*5	1-70	OCT 29, 2026
26 00 00	Electrical and Lighting*6	1-71	OCT 29, 2026
28 00 00	Electronic Safety and Security*6	1-26	OCT 29, 2026
APPENDICES			
A1	Ontario Fire Marshal's Guidelines for Maintaining Fire Safety during Construction in Existing Buildings	1-3	JAN, 2003
A2	ProMark Window Film & Blinds Inc. Quotation*9	1-1	OCT 29, 2026

Document Responsibility (DR) Legend

*1 By Owner
*2 By HOK, Inc., Design Consultant
*3 By Hardware Consultant
*4 By Landlord/Building Owner
*5 By Mechanical Consultant
*6 By Electrical Consultant
*7 By Telecommunications Consultant
*8 By Construction Manager
*9 By Window Film & Blinds Vendor

Project Requirements Table of Contents

	Section	Title	
Division 00		PROCUREMENT AND CONTRACTING REQUIREMENTS	9
1.1	00 01 20	List of Schedules	9
1.2	00 30 00	Information Available to Bidders	10
1.3	00 43 73	Proposed Schedule of Value Forms	11
1.4	00 63 25	Request for Substitution Form	13
1.5	00 70 00	Conditions of the Contract	16
Division 01		GENERAL REQUIREMENTS	16
1.6	01 11 00	Summary of Work	16
1.7	01 14 19	Use of Site	19
1.8	01 21 00	Allowance	20
1.9	01 22 00	Unit Prices	21
1.10	01 23 00	Alternates	21
1.11	01 25 13	Product Substitution Procedures	22
1.12	01 26 00	Contract Modification Procedures	23
1.13	01 29 00	Payment Procedures	23
1.14	01 31 13	Project Coordination	24
1.15	01 31 19	Construction Meeting	26
1.16	01 32 33	Photographic Documentation	26
1.17	01 33 00	Submittal Procedures	26
1.18	01 33 23	Shop Drawings, Product Data, and Samples	35
1.19	01 33 30	SDS Submittals	36
1.20	01 35 13	Special Project Procedures	36
1.21	01 35 16	Alteration Project Procedures	38
1.22	01 35 26	Governmental Safety Requirements	40
1.23	01 35 31.19	Construction Waste Management	40
1.24	01 35 43.13	Environmental Procedures for Hazardous Materials	44
1.25	01 35 53	Security Procedures	44
1.26	01 41 13	Codes	45
1.27	01 42 00	Reference Standards	45
1.28	01 43 00	Quality Assurance	45
1.29	01 43 39	Mockups	46
1.30	01 45 23	Testing and Inspection Services	47
1.31	01 50 00	Temporary Facilities and Controls	48
1.32	01 55 00	Vehicular Access and Parking	52
1.33	01 56 00	Temporary Barriers and Enclosures	52
1.34	01 58 13	Temporary Project Signage	52

1.35 01 65 00 Product Requirements 53
1.36 01 71 16 Acceptance of Conditions 54
1.37 01 73 00 Execution 54
1.38 01 73 29 Cutting and Patching 56
1.39 01 73 30 Deficiency Rectification 60
1.40 01 74 13 Progress Cleaning 60
1.41 01 74 23 Final Cleaning 60
1.42 01 77 00 Closeout Procedures 61
1.43 01 77 20 Final Payment Application 62
1.44 01 78 39 Project Record Documents 62
1.45 01 81 13 Sustainable Design Requirements 64
Division 02 EXISTING CONDITIONS 66
1.46 02 41 20 Selective Demolition 66
1.47 02 44 00 Structural Alteration 68
Division 03 CONCRETE 70
1.48 03 35 00 Concrete Floor Finishing 70
1.49 03 35 43 Concrete Floor Polishing – Including Levelling of Existing Slabs 72
1.50 03 53 23 Self Levelling Concrete Topping With Topcoat 73
Division 05 METALS 76
1.51 05 41 00 Structural Stud Framing (Interior Partitions) 76
1.52 05 50 00 Metal Fabrications 77
Division 06 WOOD, PLASTICS, AND COMPOSITES 79
1.53 06 10 00 Rough Carpentry 79
1.54 06 40 23 Interior Architectural Woodwork 81
1.55 06 48 00 Wood Frames 83
1.56 06 91 00 General Installations 84
Division 07 THERMAL AND MOISTURE PROTECTION 84
1.57 07 21 00 Thermal Insulation 84
1.58 07 81 16 Cementitious Fireproofing 86
1.59 07 81 23 Intumescent Fire-Resistive Coatings 87
1.60 07 84 00 Fire Stopping 88
1.61 07 84 46 Fire Resistive Joint Systems 90
1.62 07 86 00 Smoke Seals 90
1.63 07 92 00 Joint Sealants 91
Division 08 OPENINGS 93
1.64 08 11 13 Hollow Metal Doors And Frames 93
1.65 08 12 16 Aluminum Frames 97
1.66 08 14 16 Flush Wood Doors 97
1.67 08 31 13 Access Doors and Frames 99

1.68 08 71 00 Door Hardware 100
1.69 08 71 00 Door Hardware Schedule 101
1.70 08 71 13 Automatic Door Operators 101
1.71 08 81 00 Glass Glazing 103
1.72 08 80 10 Interior Glazing 106
1.73 08 83 00 Mirrors 106
1.74 08 87 00 Glazing Surface Films 107
Division 09 FINISHES 107
1.75 09 06 00 Legend of Products and Legend of Materials 107
1.76 09 21 16 Gypsum Board Assemblies 107
1.77 09 22 00 Supports for Plastering and Gypsum Board 112
1.78 09 31 00 Thin Set Tiling 112
1.79 09 51 00 Acoustical Ceilings 115
1.80 09 53 00 Acoustical Ceiling Suspension Assemblies 117
1.81 09 65 00 Resilient Flooring 117
1.82 09 68 00 Carpeting 119
1.83 09 72 00 Wall Coverings 120
1.84 09 77 00 Special Wall Covering 120
1.85 09 84 13 Fixed Sound-Absortive Panels 121
1.86 09 91 00 Painting 121
1.87 09 96 00 High Performance Coatings 126
Division 10 SPECIALTIES 128
1.88 10 11 00 Visual Display Units 128
1.89 10 22 19 Demountable Partition 128
1.90 10 22 26 Operable Partitions 129
1.91 10 26 13 Corner Guards 130
1.92 10 26 23 Protective Wall Covering 130
1.93 10 28 13 Toilet Accessories 131
1.94 10 99 00 Manufactured Specialties 131
Division 11 EQUIPMENT 132
1.95 11 31 13 Residential Kitchen Appliances and Accessories 132
Division 12 FURNISHINGS 132
1.96 12 24 13 Roller Window Shades 132
1.97 12 36 16 Stainless Steel Countertops 133

End of Project Requirements Table of Contents – Prepared by HOK, Inc.

Project Requirements Table of Contents – Prepared by H.H. Angus & Associates Ltd.

Section	Title	
Division 20	MECHANICAL SUPPORT SYSTEMS ……..……..	1-205
20 01 01	Mechanical General Requirements	
20 01 02.ON	Qualifications and Authorities – Ontario	
20 01 03	Mechanical Coordination and Installation Design Services	
20 01 13	Definitions and Abbreviations	
20 05 01	Basic Materials and Methods	
20 05 02	Painting for Mechanical Services	
20 05 12	Common Electrical Requirements for Mechanical Services	
20 05 23	General Requirements for Valves	
20 05 29	Common Hanger and Support Requirements for Piping	
20 05 53	Identification for Mechanical Services	
20 07 11	Common Requirements for Mechanical Insulation	
20 07 13	Ductwork Insulation	
20 07 19	Piping Insulation	
20 08 01	Start-up and Performance Testing Reporting	
20 08 11	Testing of Integrated Mechanical Fire Protection and Life Safety Systems	
Division 21	FIRE SUPPRESSION ……..……..	1-21
21 05 01	Common Work Results for Fire Suppression	
21 12 13	Standpipe and Hose Systems	
Division 22	PLUMBING ……..……..	1-69
22 05 01	Common Work Results for Plumbing Piping	
22 05 23.13	General-Duty Valves for Plumbing Piping	
22 05 93	Testing Adjusting and Balancing for Plumbing	
22 11 16.13	Domestic Water piping – Copper	
22 11 19	Domestic Water Piping Specialties	
22 13 16.13	Sanitary Waste and Vent Piping – Cast Iron and Copper	
22 13 16.16	Sanitary Waste and Vent Piping - PVC	
22 13 19.13	Domestic Water Temperature Mixing Valves	
22 42 00	Plumbing Fixtures	
22 45 00	Emergency Plumbing Fixtures	
22 47 00	Drinking Fountains and Water Coolers	
Division 23	HEATING, VENTILATION, AND AIR CONDITIONING SYSTEMS ……..…...	1-124
23 05 01	HVAC Piping Systems General Requirements	
23 05 23.13	General-Duty Valves for HVAC Water Piping	

23 05 93.13 Testing Adjusting and Balancing of HVAC
23 21 13.23 Hydronic Piping – Carbon Steel
23 21 13.33 Hydronic Piping - Copper
23 31 01 Air Distribution - General
23 31 13.13 Metal Ducts
23 31 13.14 Cable Supports for Ductwork
23 33 05 Duct Accessories
23 33 13.11 Manual Balancing Dampers
23 33 13.16 Fire and Smoke Dampers
23 33 19 Duct Silencers
23 33 43 Flexible Connectors
23 34 16 HVAC Fans
23 36 13 Air Terminal Units
23 37 13 Grilles, Registers and Diffusers
Division 25 INTEGRATED AUTOMATION …… 1-70
25 05 01 Building Automation Common Work Results
25 05 06 Work on Existing Building Automation
25 05 12 Building Automation Control Panels and Wiring
25 14 17 Building Automation Terminal Unit Controllers
25 15 16 Building Automation Software for Control and Monitoring
25 30 16.13 Building Automation Instrumentation
25 30 19.13 Building Automation Control Valves
25 90 01.CS100 VAV Terminal Units
25 90 01.CS101 VAV Terminal Units with Reheat
Division 26 ELECTRICAL AND LIGHTING …….. 1-71
26 01 01 Electrical General Requirements
26 01 02 Qualifications and Authorities - Ontario
26 05 01 Electrical Basic Materials and Methods
26 05 19 Low-Voltage Electrical Power Conductors
26 05 32 Splitters, Junction and Pull Boxes, Cabinets
26 05 33 Conduits, Fastenings and Fittings
26 05 35 Outlet Boxes, Conduit Boxes and Fittings
26 07 13 Wiring to Owners Equipment
26 27 26 Wiring Devices
26 27 28 Wire and Box Connectors 0-1000 V
26 28 16.13 Molded Case Circuit Breakers

26 50 00 Lighting

Division 28 ELECTRONIC SAFETY AND SECURITY …… 1-26

28 46 11 Fire Alarm System Imitating and Input Devices

28 46 21.11 Addressable Fire Alarm System

28 46 23 Fire Alarm Notification and Output Devices

28 46 90 Fire Alarm System Sequence of Operation

End of Project Requirements Table of Contents – Prepared by H.H. Angus & Associates Ltd.

Division 00 PROCUREMENT AND CONTRACTING REQUIREMENTS

1.1 **00 01 20 LIST OF SCHEDULES**

Section #	**Schedules**	**Date Issued**
08 71 00	Door Hardware Schedule ……..……..	OCT 29, 2026
09 06 00	Legend of Materials ……	OCT 29, 2026
09 06 00	Legend of Products ……	OCT 29, 2026

End of List of Schedules

1.2 **00 30 00 INFORMATION AVAILABLE TO BIDDERS**

.1 BIDDING REQUIREMENTS

.1 Under separate cover.

.2 Where requirements differ among the referenced documents, the most stringent requirements shall apply.

.2 CONTRACTING REQUIREMENTS

.1 Under separate cover.

.2 Where requirements differ among the referenced documents, the most stringent requirements shall apply.

.3 OWNER'S REQUIREMENTS

.1 Under separate cover.

.2 Contract Labour Program, Revision 3, under separate cover.

.3 Where requirements differ among the referenced documents, the most stringent requirements shall apply.

.4 HAZARDOUS SUBSTANCES SURVEY

.1 Detailed Hazardous Substances Survey is available through WLU.

.2 The survey examined for "designated substances" in accordance with Bill 208. The recommendations given shall not be construed as a requirement of the Contract unless also contained in the Contract Documents.

.3 Neither the Owner nor the Consultant guarantee the accuracy or completeness of report. The Contractor shall satisfy himself, with regard to all matters relating to asbestos materials, designated substances and conditions which may affect methods or cost of construction before commencing work.

End of 00 30 00

1.3 **00 43 73 PROPOSED SCHEDULE OF VALUE FORMS**

.1 For Contracts of multiple floors and/or multiple phases the Schedule of Values for each application for payment shall be broken down as follows:

.1 By floor for multiple floor projects of more than two floors, aggregating the total of each line item in the Schedule of Values.

.2 By phase for single floor projects of more than one phase, aggregating the total of each line item in the schedule of values.

.3 By phase, then by floor for phases of more than two floors, aggregating the total of each line item in the schedule of values.

.2 The Schedule of Values is to be based on the format described above and the content of the schedule which follows:

Spec. Section	Item	Contract Amount
Arch'l / Int. Design	General	-
	Bonding & Insurance	-
	Site	-
	Profit & Overhead	-
	Record Documents/Warranties	-
02 41 20	Demolition	-
05 50 00	Metal Fabrications	-
06 40 23	Architectural Woodwork	-
08 11 13	HM Doors & Frames	-
08 14 16/06 48 00	Flush Wood Doors & Wood Frames	-
08 71 00	Door Hardware	-
08 81 00/08 83 13	Glazing/Mirrors	-
09 21 16	GWB Partitions/Ceilings	-
09 31 00	Thin-set Tiling	-
windo	Acoustic Ceilings	-
09 60 00	Flooring	-
09 91 00	Painting	-
10 22 19	Demountable Partitions	-
12 24 00	Window Coverings (ProMark Quote)	-
	Arch'l / Int. Design subtotal:	-
Mechanical	Mechanical 1	-
	Sprinklers	-
	Plumbing	-
	HVAC	-
	Mechanical 5	-
	Mechanical subtotal:	-

Electrical		Electrical 1		-
		Lighting		-
		Power		-
		Controls		-
		Electrical 5		-
27 20 00		Data Cabling		-
28 00 00		Security Systems		-
		Electrical subtotal:		-
		Base Contract subtotal:		-
Cash Allowances				
	1			-
	2			-
	3			-
		Cash Allowance subtotal:	$	-
		Contract subtotal:		-

1.4 **00 63 25 REQUEST FOR SUBSTITUTION FORM**

From: _____ **RFS No:** _____

To: _____ (RFS No. To be completed by Consultant)

Copies: _____ **Issue Date:** _____

Product, Material or Equipment Required of the Contract Documents:

Specification Section: _____ Drawing No./Detail: _____

Description: _____

Requested Substitute Product, Material or Equipment:

Description: _____

Attachments Included: ☐ Drawings ☐ Product Data ☐ Samples ☐ Test Reports

☐ Other: _____

Reason for Substitution: _____

Has this item been used in a similar application? ☐ Yes ☐ No

Describe Application: _____

_____

_____

Describe Results: _____

_____

_____

Owner Contact Location: _____

_____

Comparisons of the Specified Item and the Proposed Substitution:

Compare significant qualities of size, weight, durability, performance and visual effect:

_____

_____

Describe any changes required in other elements of the Work to accommodate the proposed substitution, including work performed by the Owner and separate contractors:

_____

What effect will the proposed substitution have on the work schedule in comparison to the work schedule without approval of the proposed substitution?

_____

Cost comparison of the proposed substitution to the originally specified item, including correlating modifications required to other work:

_____

Net cost to the Owner: _____

Changes in contract time:_____

Signatures:

Permission to make any substitution after award of contract shall be effected by Change Order. It shall not relieve the Contractor, any subcontractor, or manufacturer, fabricator, or supplier from the responsibility for any deficiency that may exist in the substituted product or any departures or deviations from the Contract Documents as modified by such Change Order. Except as otherwise expressly specified by the Contractor in the Request for Substitution and expressly approved in such Change Order, the Contractor shall be deemed to warrant, by his request, that the proposed substitute will satisfy all standards and requirements satisfied by the original product, material or equipment specified and the Change Order shall not be deemed to modify the Contract Documents with respect thereto. If any substitution will affect a correlated function, adjacent construction, or the work of other trades or contractors, the necessary changes and modifications to the effected work shall be considered as an essential part of the proposed substitution, to be accomplished by the Contractor without additional expense to the Owner if and when accepted.

Contractor's Signature: _____ Date: _____

Consultants' Action:

Consultant's Name: _____

Consultant's Signature: _____ Date: _____

☐ Accepted ☐ Rejected ☐ More information required. Comments:_____

_____

_____

_____

Consultant's Name: _____

Consultant's Signature: _____ Date: _____

☐ Accepted ☐ Rejected ☐ More information required. Comments:_____

_____

_____

_____

Consultant's Name: _____

Consultant's Signature: _____ Date: _____

☐ Accepted ☐ Rejected ☐ More information required. Comments:_____

_____

_____

_____

Consultant's Name: _____

Consultant's Signature: _____ Date: _____

☐ Accepted ☐ Rejected ☐ More information required. Comments:_____

_____

_____

_____

END OF DOCUMENT 00 63 25.

1.5 **00 70 00 CONDITIONS OF THE CONTRACT**

.1 The General Conditions of the Contract for Construction and Supplemental Conditions, as supplied by the Owner are provided under separate cover, and are incorporated into these specifications by reference. Where any part of the Contract Documents is inconsistent with these Conditions of the Contract, the Conditions of the Contract shall govern.

.2 Technical Specifications and Administrative Requirements for the Project are divided into multiple divisions. The General Requirements apply to all work for the Project.

Division 01 GENERAL REQUIREMENTS

1.6 **01 11 00 SUMMARY OF WORK**

.1 Scope: The work of this Contract is for renovation of existing building space for WLU: Faculty of Education – Level 07 at 75 University Avenue West for Wilfrid Laurier University. Work will be required on other floors to provide utility and access to Project work areas shown. The full scope shall be as shown on drawings and specified herein.

.1 The Work shall consist of all items specifically included in the Construction Documents as well as all inferable additional items of Work necessary to make the related assembly or system operational and compliant with the project quality standards.

.1 Apply for, obtain, and pay for permits. Be responsible for obtaining any necessary licenses, fees, inspections, and permits, and for complying with any federal, provincial municipal laws, codes, and regulations applicable to the performance of the Work.

.2 The Construction Documents are complementary and what is required by one shall be as binding as required by all. Any differences between requirements of the Drawings and the Specifications or any differences within the Drawings or within the Specifications shall be referred to the Owner and Consultant for clarification prior to submission of bids.

.3 If any such differences or conflicts are not called to the Owner's and Consultant's attention prior to sub-mission of bids, the Consultant shall decide which of the conflicting requirements will govern based upon the most stringent of the requirements, subject to the approval of the Owner, and the Contactor shall perform the Work at no additional cost and/or time to the Owner.

.2 Specifications Language and Style:

.1 The term Contractor is to be read as Construction Manager in the Construction Documents.

.2 When used in the context of a Product, read the word “provide” to mean “supply and install to result in a complete installation ready for its intended use”.

.3 Documents at the Site:

.1 Keep the following documents at Place of the Work, stored securely and in good order and available to Owner and Consultant in hard copy and electronic form:

.2 Current Contract Documents, including Drawings, Specifications and addenda.

.3 Change Orders, Change Directives, and Supplementary Instructions.

.4 Reviewed Shop Drawings, Product data and samples.

.5 Field test reports and records.

.6 Construction progress schedule.

.7 Meeting minutes.

.8 Manufacturer's certifications.

.9 Permits, inspection certificates, and other documents required by authorities having jurisdiction.

.10 Current as-built drawings.

.11 Safety Data Sheets (SDS) for all controlled Products.

.4 Relocate and/or adjust mechanical, electrical, security and fire protection systems and/or devices as required by the work indicated on the drawings. Upgrade existing systems if required to comply with codes and authorities having jurisdiction.

.1 Overall security systems are the responsibility of the Owner. Coordinate the security systems work of this contract with the Owner.

.5 The Building Code applicable to the Place of the Work and all other authorities having jurisdiction shall govern all work.

.6 Seismic Requirements (As Require by the Place of Work):

.1 Design to meet seismic requirements for Place of Work in accordance with authorities having jurisdiction.

.2 Submit Engineered Shop Drawings for all seismic bracing, stamped by engineer with experience in this type of work and licensed in Place of Work.

.7 Contact building officials to request all required inspections. Do not proceed with work until inspections have been made and comply with any and all orders from building officials.

.8 All work shall be done in accordance with the Occupational Health and Safety Act and regulations for construction projects applicable to the Place of the Work.

.9 All work listed, shown, or implied in the Contract Documents to be provided by the Contractor unless otherwise noted.

.10 Provide all labour and materials required to complete demolition and removal of items indicated in Contract Documents.

.11 Owner Furnished Items:

.1 The Owner will arrange and pay for delivery of Owner-furnished items.

.2 The Contractor shall be responsible for

.1 Receiving, unloading, and handling Owner furnished items at the site.

.2 Protecting these items from damage, and repair or replace items damaged as a result of his operations.

.3 Providing support systems to receive Owner's equipment, mechanical and electrical connections.

.4 Obtaining manufacturer's written installation instructions and recommendations, and install Owner furnished items in accordance with the product manufacturer's written installation instructions.

.3 The following items are furnished and installed by the Owner:

.1 Communications and terminal equipment.

.2 IT equipment.

.3 AV equipment.

.4 Security equipment and cabling.

.5 Door Hardware: Electric Strike, Automatic Door Operators and Door Levers with Key Lock only.

.12 Provide supervision, labour, materials, equipment, appliances and services as necessary or required for the proper construction and completion of the Work on schedule, and for temporary services and maintenance of the work site during construction.

.13 Inspect site prior to the commencement of construction and report immediately to the Consultant any unacceptable conditions or discrepancies from the Contract Documents.

.14 Do not scale drawings.

.15 Provide Certificates of Clearance from the Workers' Compensation agency for the Place of the Work covering the duration of the Contract.

.16 Design and Engineering:

.1 Mechanical and Electrical/Data/Communications: The drawings indicate or require changes to the mechanical, electrical and/or structural systems. Contractor shall provide the Work including all necessary design and permits for a complete installation.

.2 Mechanical:

.1 Mechanical Installations shall be done in accordance with Provincial and other codes, regulations and rules.

.2 Drawings indicate removed, relocated, and new HVAC diffusers and grills. Contractor shall make necessary modifications to the distribution system to accommodate the new requirements

.3 Electrical:

.1 Electrical Installations shall be done in accordance with the current edition of the Canadian Electrical Code, Provincial and other codes, rules and regulations.

.2 Drawings indicate removed, relocated and new lighting fixtures and switching. Contractor shall circuit as required and make necessary revisions and modifications to existing electrical distribution panels to accommodate new requirements.

.3 Drawings indicate removed, relocated and new power and communications outlets. Contractor shall circuit as required and make necessary revisions and modifications to existing electrical distribution panels to accommodate new requirements. Conduits for Data and Communications shall terminate at the appropriate patch panels and terminal panels.

.4 Data and Communications Contractor:

.1 Employ the subcontractors specified by the Owner for all voice and data cabling installations.

.5 Systems Furniture Wiring:

.1 Drawings indicate relocated and new furniture. Contractor is responsible for reconfiguring power, voice and data cabling within systems furniture being relocated and for making connections to wall or floor outlets to new furniture.

.6 Security:

.1 Design of security provisions and related equipment is the responsibility of the Owner's security Consultant. Coordinate the security Work with the other Work of this contract.

.2 Collect the following documents for reference and perform all work in accordance with: the Owner’s current tenant manual, construction manual and health and safety requirements.

.3 Employ the subcontractors specified by the Owner for all security pre-wiring.

.7 Audio-Visual:

.1 Employ the subcontractors specified by the Owner for all audio-visual pre-wiring.

1.7 **01 14 19 USE OF SITE**

.1 Confine construction equipment, temporary Work, storage of Products, waste products and debris, temporary construction offices, and all other construction operations to limits required by laws, ordinances, permits, and Contract Documents, whichever is most restrictive. Do not unreasonably encumber Place of the Work.

.2 All Work shall be confined to the Place of the Work (Contract Labour Program) except when permitted and scheduled on a day-to-day basis by the Owner.

.3 Work Restrictions: Comply with restrictions on construction operations and on-site work hours, security, and limitations on use of public streets and with other requirements of Owner and authorities having jurisdiction.

.1 Comply with "Construction Rules, Specifications and Standards" (building rules and regulations) available from the Owner's Facility Group.

.2 Nonsmoking Building: Smoking is not permitted within the building or within 25 feet (8 m) of entrances, operable windows, or outdoor-air intakes.

.4 Access to the Site: Contractor shall have limited use of Project site for construction operations as indicated on Drawings by the Contract limits and as indicated by requirements of this Section.

.1 During period of construction, the Owner will continue to perform normal activities in and adjacent to the Project Work areas. Contractor shall provide proper and safe access to the Owner-occupied areas at all times

.2 Do not interrupt utilities serving facilities occupied by Owner or others unless written permission has been provided by the owner and then only after providing temporary utility services.

.3 Driveways, Walkways and Entrances: Keep driveways loading areas, and entrances serving premises clear and available to Owner, Owner's employees, and emergency vehicles at all times. Do not use these areas for parking or storage of materials.

.1 Schedule deliveries to minimize use of driveways and entrances by construction operations.

.2 Schedule deliveries to minimize space and time requirements for storage of materials and equipment on-site.

.5 Under no circumstances shall the Contractor or their Subcontractors use the Owner's or tenant's equipment, or any equipment located in the Place of the Work including, but not limited to, computers, faxes or photocopiers.

1.8 **01 21 00 ALLOWANCE**

.1 Definitions

.1 Allowance shall include cost to Contractor of specific products and materials ordered by Owner or selected by Consultant under allowance and shall include applicable taxes (excluding Value Added Taxes), freight, and delivery to Project site.

.2 Unless otherwise indicated, Contractor's costs for receiving and handling at Project site, labor, installation, overhead and profit, and similar costs related to products and materials under allowance shall be included as part of the Contract Sum and not part of the allowance.

.3 Unused Materials: Return unused materials purchased under an allowance to manufacturer or supplier for credit to Owner, after installation has been completed and accepted.

.2 Stock

.3 Adjustment of Allowances: To adjust allowance amounts, prepare a Change Order proposal based on the difference between purchase amount and the allowance, multiplied by final measurement of work-in-place where applicable. If applicable, include reasonable allowances for cutting losses, tolerances, mixing wastes, normal product imperfections, and similar margins.

.1 Include installation costs in purchase amount only where indicated as part of the allowance.

.2 If requested, prepare explanation and documentation to substantiate distribution of overhead costs and other margins claimed.

.4 Submit claims for increased costs because of a change in scope or nature of the allowance described in the Contract Documents, whether for the purchase order amount or Contractor's handling, labor, installation, overhead, and profit.

.5 Examination: Examine products covered by an allowance promptly on delivery for damage or defects. Return damaged or defective products to manufacturer for replacement.

.6 Preparation: Coordinate materials and their installation for each allowance with related materials and installations to ensure that each allowance item is completely integrated and interfaced with related work.

.7 Schedule of Allowances

.1 Allowance No. 1: Comply with WLU Section 01 21 00 – Allowances, under separate cover.

.2 Allowance No. 2: Structural 3rd Party Review: $5,000.00

.3 Allowance No. 3: Fire stopping: $10,000.00

.4 Allowance No. 4: Flooring Levelling: $10,000.00

1.9 **01 22 00 UNIT PRICES**

.1 Administrative and procedural requirements for unit price amounts for acquisition and installation of items and/or systems based on specific unit quantities. Unit prices to be developed to be determined.

1.10 **01 23 00 ALTERNATES**

.1 Alternate: An amount proposed for certain work defined in the bidding requirements that may be added to or deducted from the base bid amount if Owner decides to accept a corresponding change either in the amount of construction to be completed or in the products, materials, equipment, systems, or installation methods described in the Contract Documents.

.1 Alternates described in this Section are part of the Work only if enumerated in the Contract.

.2 The cost or credit for each alternate is the net addition to or deduction from the Contract Sum to incorporate alternate into the Work. No other adjustments are made to the Contract Sum.

.2 Coordination: Revise or adjust affected adjacent work as necessary to completely integrate work of the alternate into Project.

.1 Include as part of each alternate, miscellaneous devices, accessory objects, and similar items incidental to or required for a complete installation whether or not indicated as part of alternate.

.3 Execute accepted alternates under the same conditions as other work of the Contract.

.4 Schedule: A schedule of alternates is included at the end of this Section. Specification Sections referenced in schedule contain requirements for materials necessary to achieve the work described under each alternate.

1.11 **01 25 13 PRODUCT SUBSTITUTION PROCEDURES**

.1 General: Changes to specified products, materials, equipment, and methods of construction proposed by the Contractor after Award of the Contract are considered to be Substitutions.

.1 Substitutions for Cause: Proposed changes that are required due to changed Project conditions, including unavailability of product, regulatory changes, or unavailability of required warranty terms.

.2 Substitution Request Submittal: Requests for Substitution if received during the time of Tender and approved by Designer and Owner before closing of Tender. Requests for Substitution if received within 30 days after Notice to Proceed will not be considered.

.1 Identify the product, fabrication or installation method to be substituted. Include related Specification Section and Drawing numbers.

.2 Provide complete documentation indicating the following:

.1 Justification for substitution request.

.2 Effects on Contractor’s Construction Schedule.

.3 Coordination information.

.4 Detailed comparison.

.5 Drawings.

.6 Specifications.

.7 Performance data

.8 Product Data.

.9 Samples.

.10 Certificates and qualification data.

.11 List of similar installations.

.12 Material test reports.

.13 Research reports.

.14 Detailed comparison of Contractor's construction schedule.

.15 Cost information, including costs by adjacent materials, assemblies and components incurred as a result of acceptance of the substitution.

.16 Certification that the proposed substitution conforms to requirements in the Contract Documents and is appropriate for the applications indicated.

.17 Waiver of rights to additional payment or time that may subsequently become necessary because of the failure of the substitution to perform.

.3 Substitutions for Cause Conditions: Request for Substitution will be considered when one or more of the following conditions are satisfied, as determined by the Consultant.

.1 Requested substitution is consistent with the Contract Documents and will produce indicated results.

.2 Requested substitution provides sustainable design characteristics that specified product provided.

.3 Substitution request is fully documented and submitted to comply with submission requirements.

.4 Requested substitution will not adversely affect Contractor's construction schedule.

.5 Requested substitution has been approved by authorities having jurisdiction.

.6 Requested substitution is compatible with other portions of the Work.

.7 Requested substitution has been coordinated with other portions of the Work.

.8 Requested substitution provides specified warranty.

.9 If requested substitution involves more than one contractor, requested substitution has been coordinated with other portions of the Work, is uniform and consistent, is compatible with other products, and is acceptable to all contractors involved.

.4 Substitutions for Convenience: Not allowed.

.5 Consultant's Action: If necessary, Consultant will request additional information within 7 days of receipt of a request for substitution. Consultant will notify Contractor of acceptance or rejection within 15 days of receipt, or seven days of receipt of additional information.

1.12 **01 26 00 CONTRACT MODIFICATION PROCEDURES**

.1 Do not proceed with any work involving extra costs or time without written authorization from the Owner.

.2 Proposed Change: The Consultant issues a Proposed Change to obtain quotations for modifications being considered. This is not an authorization for the Contractor to proceed with the work.

1.13 **01 29 00 PAYMENT PROCEDURES**

.1 Prior to submission of the initial Application for Payment, no later than 7 days before the date scheduled for submittal of the initial Application for Payment.:

.1 Confirm with Consultant how invoices shall submitted.

.2 Submit a proposed Schedule of Values for review and approval by the Consultant. The Schedule of Values is to include a line item for the value of the as-builts and other close out documentation.

.2 All applications for payment (progress billings) are to be submitted directly to the Consultant.

.3 Schedules of Values and applications for payment are to be submitted in a format acceptable to Consultant.

.4 All progress invoices are to be accompanied by a current clearance certificate from the Workers' Compensation agency for the Place of the Work.

.5 Second and subsequent progress invoices are to be accompanied by a Statutory Declaration on the appropriate contract form.

1.14 **01 31 13 PROJECT COORDINATION**

.1 Consultant's Process: The Consultant will use Trimble ProjectSight for tracking and responding to communications from the Contractor and for submitting requests, responses, and information to the Contractor.

.1 Prepare requests and submittals on electronic forms acceptable to Consultant and Owner.

.2 Examine the Contract Documents to determine that coordination is satisfactory. Bring conflicts in work of different disciplines, to the attention of the Consultant immediately for resolution prior to award of subcontracts.

.1 Coordination Drawings: Prepare coordination drawings where installation is not completely shown on Shop Drawings, where limited space availability necessitates coordination, or if coordination is required to facilitate integration of products and materials fabricated or installed by more than one entity.

.2 Architectural reflected ceiling plans and power, data and communication plans are for design intent and dimensioning purposes only. Coordinate equipment connection points with mechanical, electrical, and shop drawings. Report discrepancies to the Consultant prior to rough-in.

.3 Coordinate mechanical and electrical engineers Drawings with Architectural Drawings. Adjust suspended ceiling grids and acoustical tile to accommodate mechanical and electrical devices and equipment.

.4 Verify size, location, electrical requirements and characteristics of work and/or equipment supplied by the Owner or others prior to the start of related work with the manufacturer or supplier.

.5 Verify required location of all necessary access panels (in partitions, floors, or ceilings) and coordinate sizes and locations with Consultant prior to installation.

.3 Administrative Procedures:

.1 Coordinate scheduling and timing of required administrative procedures:

.1 Preparation of schedules.

.2 Delivery and processing of submittals.

.3 Progress meetings.

.4 Project closeout activities.

.4 Conservation: Coordinate construction operations to assure that operations are carried out with consideration given to conservation of energy, water, and materials.

.5 Requests for Interpretation (RFI): Immediately on discovery of the need for interpretation of the Contract Documents, prepare and submit an electronic RFI in writing to the

Consultant, with copy to the Owner, indicating the project name, address, contractor information, subject, description of the request and RFI number.

.1 Limit each RFI to one subject.

.2 Submit an RFI if one of the following conditions occur:

.1 Contractor discovers and unforeseen condition or circumstance that is not described in the Contract Documents.

.2 Contractor discovers an apparent conflict or discrepancy between portions of the Contract Documents that appears to be inconsistent or is not reasonably inferred from the intent of the Contract Documents.

.3 Do not submit an RFI as a request for substitution.

.4 Do not submit an RFI as a submittal.

.5 RFI Log: Maintain a tabular log of RFIs. Submit log weekly.

.6 Consultant's Action: At a minimum, allow an average of (7) seven working days for Consultant's response for each RFI. At a minimum allow an average of (3) additional working days for each RFI issued within the seven (7)-working days of the previous RFI.

.6 Contractor's Construction Schedule:

.1 Submit Construction Schedule 15 working days prior to the date established for the Notice to Proceed for the Work. Update weekly and distribute the construction schedule.

.2 Format: Comprehensive, fully developed, horizontal, Gantt-chart-type.

.3 Milestones:

.1 Include milestones indicated in the Contract Documents in schedule, including, but not limited to, the notice to proceed, Substantial Completion and deemed completion.

.2 Indicate phasing and scheduling of related activities such as cabling and furniture installation. Identify all key ordering and installation dates that may affect the construction progress. Bring to the Consultants' attention any long lead items that may affect the completion date.

.4 Submit Contractor's Construction Schedule with Submittal Schedule, Progress Reports, Payment Requests, and other required schedules and reports. Submit copies of schedules to Consultant for review.

.7 Coordinate delivery and installation of items supplied by separate contracts or others such as, signage, decorative films, electrical items, plumbing items, furniture and demountable partition systems.

.8 Provide blocking, backing, framing hangers, or other support for all fixtures, equipment, cabinetry, furnishings, and all other items as required.

1.15 **01 31 19 CONSTRUCTION MEETING**

.1 Give the Consultant reasonable notice of required inspections and site approvals, so as not to delay the progress of the work.

.2 Project Meetings: Request representation at each meeting by every party currently involved in coordination or planning for the construction activities involved, including but not limited to the Consultant, the Owner, his representative, the Contractor, the fabricator and installer for relevant portions of the work to be discussed. Record meeting results and distribute copies to everyone in attendance and to others affected by decisions or actions resulting from each meeting.

.1 Preconstruction conferences: No later than 10 working days after execution of the Contract.

.2 Preinstallation conferences: At the Project Site before each construction activity that requires coordination with other construction.

.3 Progress meetings: Review Contractor's Construction Schedule. Coordinate dates of meetings with preparation of the payment request. Prepare weekly construction report recording activities and events at the site, and submit two (2) copies to the Consultants and Owner at Progress. Include site condition reports, material location reports and special reports.

.4 Coordination meetings: In addition to specific meetings held for other purposes, such as regular progress meetings and special preinstallation meetings.

.5 Record and distribute minutes of the site meetings within two (2) working days.

.6 Project Closeout Conference: No later than 30 days prior to the scheduled date of Substantial Completion.

1.16 **01 32 33 PHOTOGRAPHIC DOCUMENTATION**

.1 Digital Images: Provide images in JPEG format, with minimum sensor size of 10 megapixels.

.2 Date Stamp: Date and time stamp each image as it is being taken so stamp is integral to image.

.3 Field Office Prints: Maintain progress images in the field office at Project site, available at all times for reference. Identify images the same as for those submitted to Owner

.4 Types of photographic documentation required:

.1 Preconstruction images: Minimum 30 photos of existing adjacent areas of work before starting the work.

.2 Periodic construction images: Minimum 30 photos bi-weekly.

.3 Final Completion construction images: Minimum 30 photos.

1.17 **01 33 00 SUBMITTAL PROCEDURES**

.1 Submittal Schedule:

.1 Format and Content:

.1 Submit schedule in electronic format.

.2 Submit a complete Submittal Schedule arranged in chronological order by dates required by Contractor's Construction Schedule.

.3 Provide a separate line for each required submittal, organized by Specifications section names and numbers, and further broken down by individual Products and systems as required.

.4 Consolidate submittals for each specifications section. Fragmented or redundant submittals will not be reviewed.

.5 Include time required for review, ordering, manufacturing, fabrication, and delivery when establishing dates.

.6 Include time for execution and review of mockups.

.7 Include additional time required for making corrections or revisions to submittals noted by Consultant and additional time for handling and reviewing submittals required by those corrections.

.8 The Consultant and Engineering Consultants shall only comply with stated processing times if the Submittal Schedule is submitted, reviewed and approved for the project.

.2 Submission:

.1 Submit initial Submittal Schedule to Consultant within 10 Working Days acceptance of the Contractor's Construction Schedule.

.2 Consultant shall review format and content of initial schedule and request necessary changes, if any, within 10 Working Days after receipt.

.3 If changes are required, re-submit finalized schedule withing 5 Working Days after return of review copy.

.4 Submit updated Submittal Schedule weekly to Consultant.

.5 The Consultant reserves the right to withhold action on a submittal requiring coordination with other submittals until related submittals are received

.2 Coordination: Coordinate preparation and processing of submittals with performance of construction activities so as note to delay the work.

.1 Coordinate each submittal with fabrication, purchasing, testing, delivery, other submittals, and related activities that require sequential activity.

.3 Processing Time: Allow time for submittal review, including time for resubmittals, as follows. Time for review shall commence on Consultant's receipt of submittal. No extension of the Contract Time will be authorized because of failure to transmit submittals enough in advance of the Work to permit processing, including resubmittals.

.1 Allow additional time if coordination with subsequent submittals is required. The Consultant will advise the Contractor when a submittal must be delayed for coordination.

.2 Resubmittal: At a minimum, allow an additional (10) ten Working Days for reprocessing each submittal, and additional time if coordination with subsequent submittals is required. Consultant will review the initial submittal and only one re-submittal as part of this contract. Cost on time spent for additional reviews will be covered by the Contractor.

.3 Quantity: Review time will be increased, if received in quantity equal to or more than fifty sheets during five consecutive working days.

.4 Transmit submittals simultaneously to Consultant and Consultant's Engineering Consultants for concurrent review.

.5 Where submittals require sequential review, at a minimum allow 15 working days for review of each submittal, and five (5) additional working days for each additional Design Consultants' review.

.6 No extension of the Contract Time will be authorized because of failure to transmit submittals enough in advance of the Work to permit processing.

.7 The Consultant will review the submittals on shop drawings, product data and samples and one resubmittal. Reimburse the Owner, for additional services required for submittals in excess of the one resubmittal.

.8 File Identifier: Each Submission shall have a file identifier consisting of project name, submittal section name, item number, and revision number. The A/E Project Shop Drawing review stamp will read and incorporate this file name. It is therefore imperative that each submittal file use the following naming convention:

.1 Each Submittal shall be created with a four part alpha numeric file naming system, with each part separated by a dash. (For illustration purposes only, each item below is bolded and underlined to draw attention to the portion of file identifier that is being described)

.1 The first part is the project abbreviation (e.g. IDENT-061000-001-01).

.2 The second part is the specification section number (e.g. IDENT-061000-001-01.

.3 The third part is the item number of each Submittal required in that specific specification section. Each item shall have an individual number. Do not group multiple items in a single item number, as they will be returned not logged in and without an action reserved for proper submissions. The first item shall be 001, the next item 002, etc. (e.g. IDENT-061000-001-01).

.4 The fourth part represents the number of times the item has been submitted for review. No submission shall start with 00. The first submission shall be 01, the second submission shall be 02, etc. (e.g. IDENT-061000-001-01).

.5 A brief two word description of the submittal may follow the number to further clarify the content of the submittal. (e.g. IDENT-061000-001-01-plywood.pdf)

.6 Place a single dash between each part of the File Name.

.9 Provide means for insertion to permanently record Contractor's review and approval markings and action taken by Consultant.

.10 Transmittal Form for Electronic Submittals: Use electronic form acceptable to Owner, containing the following information:

.1 Project name.

.2 Date.

.3 Name and address of Consultant.

.4 Name of Construction Manager.

.5 Name of Contractor.

.6 Name of firm or entity that prepared submittal.

.7 Names of subcontractor, manufacturer, and supplier.

.8 Category and type of submittal.

.9 Submittal purpose and description.

.10 Specification Section number and title.

.11 Specification paragraph number or drawing designation and generic name for each of multiple items.

.12 Drawing number and detail references, as appropriate.

.13 Location(s) where product is to be installed, as appropriate.

.14 Related physical samples submitted directly.

.15 Indication of full or partial submittal.

.16 Transmittal number, numbered consecutively.

.17 Submittal and transmittal distribution record.

.18 Other necessary identification.

.19 Remarks.

.11 Deviations: Identify deviations from the Contract Documents on submittals.

.12 Resubmittals:

.1 Make resubmittals in same form and number of copies as initial submittal.

.2 Note date and content of previous submittal.

.3 Note date and content of revision in label or title block and clearly indicate extent of revision.

.4 Notify Consultant in writing of any revisions other than those requested by Consultant.

.5 Resubmit submittals until they are marked with approval notation from Consultant's action stamp.

.13 Distribution:

.1 Furnish copies of final submittals to manufacturers, subcontractors, suppliers, fabricators, installers, and others as necessary for performance of construction activities.

.2 Furnish copies of final accepted submittals to authorities having jurisdiction for review and approval.

.3 Show distribution on transmittal forms.

.14 Use for Construction: Retain complete copies of submittals on Project site. Use only final action submittals that are marked with approval notation from Consultant's action stamp.

.4 Definitions and Submittal Procedures

.1 Action Submittals: Written and graphic information and physical samples that require responsive action.

.1 Post electronic submittals of Product Data, Shop Drawings, Product Schedules, Coordination Drawings, Construction Schedules, Application for Payment and Delegated Design Submittals as PDF electronic files directly to Project Website or Consultant's FTP site established for this Project. The Consultant will return annotated file and retain one copy as a record document.

.2 Submit three samples of each item requiring sample submittal. Transmit samples that contain multiple related components together in one submittal package. The Consultant will retain two sample sets and the remaining set shall be kept at the site for quality control comparison during procurement and installation

.2 Informational Submittals: Written and graphic information and physical samples that do not require responsive action. Submit copies of the following informational submittals:

.1 Qualification Data, Welding Certificates, Installer Certificates, Manufacturer Certificates, Product Certificates and Materials Certificates, Material Test Reports, Product Test Reports, Research Reports, Schedules of Tests and Inspections, Preconstruction Test Reports, Compatibility Test Reports, Field Test Reports.

.2 Submittals may be rejected for not complying with requirements.

.3 The Consultant will return annotated file and retain one copy as a record document.

.5 Shop Drawings: Show, in detail, the materials, dimensions, thicknesses, assembly, attachments, relation to adjoining work, and other pertinent data and information. Check and coordinate the Shop Drawings and Product Data of any section or trade with the requirements of other sections or trades as related thereto, as required for proper and complete installation of the Work.

.1 Delegated-Design Engineered Shop Drawings: Refer to Delegated-Design Services Certification.

.6 Product Data: Collect Product Data into a single submittal for each element of construction or system. Product Data includes printed information, such as manufacturer's installation instructions, catalog cuts, standard color charts, roughing-in diagrams and templates, standard wiring diagrams, and performance curves. Mark each copy to show applicable choices and options. Where printed Product Data includes information on several products that are not required, mark copies to indicate the applicable information.

.7 Samples: Submit samples where required in technical specification sections. Submit full-size, fully fabricated Samples cured and finished as specified and physically identical with the material or product proposed. Samples include partial sections of manufactured or fabricated components, cuts or containers of materials, colour range sets, and swatches showing colour, texture, and pattern. Sample submittal and Owner's acceptance shall be for colour, pattern and texture only. Compliance with all other requirements is the responsibility of the Contractor.

.8 Delegated-Design Submittals:

.1 The Consultant's Drawings for delegated design, fabrication, and engineering may be diagrammatic, may not identify or imply solutions to design/engineering, but are intended to show the:

.1 Design intent, profiles and overall dimensions, shapes and forms,

.2 Materials and relationships between items,

.3 Location, identification of assemblies, components, accessories and other items,

.4 Schematic attachment details and diagrams of connections.

.2 Engage a professional engineer to provide engineering services by a professional engineer registered in the province or territory of the Place of the Work experienced in the work of the section requiring engineering.

.3 Submit engineered submittals where required in technical specifications sections. The professional engineer shall stamp with a seal and sign Shop Drawings, provide Product data and calculations using the design criteria, performance specifications, and other requirements provided in the Contract Documents. Be responsible for the following:

.1 Maintaining design intent, conforming to the design shown on the Drawings and the performance requirements in the specifications.

.2 Providing fabrication assemblies including materials, products, components, and accessories required for a complete design, whether or not such items are indicated on the Drawings or in the specifications.

.3 Providing anchors, attachments, inserts, fasteners, clips, bracing, framework, connections and similar items required to comply with specified design performance requirements.

.4 Securely attaching delegated design Work to adjacent supports, related adjoining work; whether or not such items are indicated on the Drawings or in the Specifications.

.4 Professional Engineer Field Review:

.1 Upon completion of the Work covered by the professional engineer submittal, the professional engineer responsible for preparation of the engineered submittal shall undertake periodic field reviews to certify that the installation is in conformance with the requirements of the Building Code of the Place of Work and with the detailed design. If required by authorities having jurisdiction, submit a letter of general conformity for those parts of the Work.

.9 Contractor's Review:

.1 Contractor's Responsibility: By submitting Shop Drawings, Calculations, Product Data and Samples, the Contractor represents that he has coordinated and checked them for completeness and compliance with the Contract Documents and that they have been approved by the Contractor. In addition, the Contractor is solely responsible for:

.1 Coordination; checking Submittals for completeness and compliance with the Contract Documents; including verification of dimensions, quantities, verification of field measurements, and performance criteria.

.2 Accuracy of quantities and dimensions shown on Submittals, and shall clearly identify proposed deviations from the Contract Documents on Submittals.

.3 Deviations: Clearly highlight and note deviations on submittals for the Consultant's review.

.4 Submissions which, in the Consultant's opinion, are incomplete, contain numerous errors, or have not been checked or have only been checked superficially will be returned for resubmission.

.2 Action and Informational Submittals: Review each submittal and check for coordination with other Work of the Contract and for compliance with the Contract Documents. Note corrections and field dimensions. Mark with approval stamp before submitting to Consultant and Construction Manager.

.3 Contractor's Approval Stamp: Stamp each submittal with Contractor’s approval stamp, date, and signature of Contractor’s authorized representative. Include Project name and location, submittal number, Specification Section title and number, and statement certifying that submittal has been reviewed, checked, and approved for compliance with the Contract Documents.

.10 Consultant's Review: Except for finish, colour and other aesthetic matters left to the Consultant's decision by the Contract Documents, the Consultant's review of Submittals is solely for the convenience of the Owner in following the Work. The Consultant's review shall not be interpreted as complete or thorough checking of detailed dimensions, quantities nor is it an approval of deviations from the Contract Documents.

.1 The Consultant's review shall not relieve the Contractor from his responsibility for accuracy of the submittals nor for the furnishing and installation of materials or equipment in accordance with Contract requirements. The Consultant's review of

a separate item shall not indicate review of the complete assembly in which it functions.

.2 Approval of submittals shall not be interpreted as approval of a substitute material or system. Approval of substitutions will be accomplished in accordance with the requirements set forth in Section "Substitutions".

.3 Notations by the Consultant which the Contractor believes will increase Contract cost or time of completion shall be brought to the Consultant's and Owner's attention before proceeding with the Work.

.4 The Owner will not acknowledge increases to the Contract time, change in the Work or cost alleged by the Contractor as a result from the Consultant's review of submittals unless written authorization is received from the Owner in the form of a Change Order prior to fabrication, installation, or execution of the Work.

.5 Except for submittals for the record or information, where action and return are required, the Consultant will review each submittal, mark to indicate action taken, and return promptly. Compliance with specified characteristics is the Contractor's responsibility.

.11 Action Submittals will be marked to indicate required action, as follows:

.1 REVIEWED: Submittal has been reviewed for the limited purpose of checking for conformance with information given and the design concept expressed in the Contract Documents and no exceptions are taken. Proceed with work represented in Submittal. The Consultant's review is not for determining the accuracy or completeness of other details, such as dimensions and quantities, or for substantiating instructions for installation or performance of equipment and systems, remain the responsibility of the Contractor. Review shall not constitute approval of safety precautions, or of construction means, methods and techniques, sequences or procedures. Approval of a specific item shall not indicate approval of an assembly of which the item is a component. Comments and corrections do not authorize changes to the Contract Documents.

.2 REVIEWED AS NOTED: Submittal has been reviewed as stated in Subparagraph 1, above, but certain exceptions are noted. Contractor may proceed with work represented in submittal, provided Contractor agrees to incorporate comments and corrections noted by Consultant. Resubmittal is not required. Comments do not authorize changes to Contract Documents.

.3 REVISE AND RESUBMIT: Submittal has been reviewed as stated in Subparagraph 1, above, but certain comments and corrections are noted, that as a minimum, are necessary for conformance with the design concept expressed in the Contract Documents. Do not proceed with the Work covered by this Submittal. Revise Submittal responding to comments and corrections and resubmit to the Consultant for review until "APPROVED" or "APPROVED AS NOTED" action is given. In resubmissions, limit corrections made to items noted in this Submittal.

.12 Informational Submittals: The Consultant is not required to review informational submittals. Informational submittals will be returned if contradictions are discovered with the following actions:

.1 NOT REVIEWED - FOR INFORMATION: Submittal has been processed for information only.

.13 Partial submittals prepared for a portion of the Work will be reviewed when use of partial submittals has received prior approval from the Consultant.

.14 Incomplete submittals and submittals with errors are unacceptable, will be considered nonresponsive, and will be returned for resubmittal without review.

.15 Submittals not required by the Contract Documents or including manufacturer's instructions to the Contractor relative to Contractor's responsibility for means, methods, procedures and safety precautions, may be returned or discarded by the Consultant without action.

.16 Safety Data Sheets (SDSs): Retain SDSs for Contractor's safety program at Project site. Do NOT submit to Consultant. SDS's submitted to the Consultant will be returned to the Contractor without review and will be deleted from the submittal log.

.17 Where submittals requiring Consultants review are required, work shall not proceed until the completion of such review.

.18 Provide 3 sets of all required submittals or a high-resolution PDF scan as applicable of requested submissions.

.19 Review submittals prior to submission to Consultant. Indicate on submittals the date of review and name of the reviewer. This review represents that necessary requirements have been determined and verified and that each submittal has been checked and coordinated with the requirements of the Work and the Contract Documents.

SUBMITTALS REQUIRED **Work shall not proceed until Consultants have reviewed and accepted submittals**	
Materials list and manufacturers' product sheets:	• Paint and high performance coatings. • Setting bed materials for tile • Grout for tile • Joint sealant • Grout sealer • Cementitious fireproofing • Access doors and frames • Acoustical ceiling and suspension system • Operable partitions • Corner guards • Toilet accessories • Miscellaneous specialties • Appliances • Roller window shades
Samples:	• Paint and high performance coating drawdowns for each colour and sheen • Wood frame • Aluminum frame • Flush wood door section • Interior glass except clear glass and clear mirror • Glazing films • Wall coverings • Special wall coverings • Stone, simulated stone, and ceramic tiles 250 by 250 mm • Fixed sound absorptive panels

	• Stained or transparent finished wood and wood veneer 250 by 250 mm for veneer panels and 250 mm long frames and running trim • Plastic Laminate • Carpet: sufficient size to show complete pattern but 250 by 250 mm minimum for each colour and pattern • Carpet base: 250 mm long by specified height for each colour and pattern • Transition strips: 250 mm long in each colour and pattern • Finishes for operable partitions • Resilient flooring and base • Wood base • Grout for tile • Roller window shades
Shop Drawings and Schedules:	• Structural stud framing (Professional Engineer stamped) • Metal fabrications (Professional Engineer stamped) • Architectural woodworking shop drawings (including cabinet hardware) • Demountable Partitions (Professional Engineer stamped) • Access doors and frames, layout and sizes • Operable partition structural support (Professional Engineer stamped) • Architectural hardware Schedules • Electrical, mechanical, and communications equipment and devices as per Mechanical and Electrical Specifications Sections • Submit Engineered Shop Drawings for all seismic bracing, stamped by engineer with experience in this type of work and licensed in Place of Work.

1.18 **01 33 23 SHOP DRAWINGS, PRODUCT DATA, AND SAMPLES**

.1 Submit a list of shop drawings to Consultant within 10 Working Days of acceptance of the Contractor's Construction Schedule.

.2 Before commencing the Work, provide in single high-resolution PDF for the Consultant's review, all shop drawings required in the Contract Documents.

.3 Shop drawings may be prepared in imperial. Sizes and dimensions shown on shop drawings shall be either in imperial alone or shown in both imperial and metric.

.4 The review of Shop Drawings by the Consultant is for the sole purpose of ascertaining conformance with the design concept and general arrangement for architectural features only, and does not in any way constitute review of the design of engineering elements which form part of the Contract Documents prepared by others. This review shall not mean that the Consultant approves the detail design inherent in the shop drawings, responsibility for which shall remain with the Contractor submitting same and such review shall not relieve the Contractor of his responsibility for errors or omissions in the Shop Drawings or of his responsibility for meeting all requirements of the Contract Documents. Confirm dimensions correlated at the job site, for information that pertains solely to

fabrication processes or to techniques of construction and installation, and for co-ordination of the work of all trades.

.5 Submittals not stamped, signed, dated and identified as to the specific project and Specification designation will be returned without being examined and are to be considered rejected. Shop drawings which have evidently not been reviewed by the Contractor, whether he has signed them or not, will be returned for resubmission as specified.

.6 Do not construct, fabricate or deliver parts of the Work requiring shop drawings prior to receiving shop drawings stamped “REVIEWED” or “REVIEWED AS MODIFIED” by the Consultant.

.7 Noted comments made on shop drawings by the Consultant are not authorization for changes to the Contract Price or Time. If comments affect the value of Work or the schedule, state such in writing to the Consultant prior to proceeding with the Work.

.8 Before commencing the Work, provide for the Consultant's approval, all samples that the Consultant may reasonably require.

1.19 **01 33 30 SDS SUBMITTALS**

.1 Provide to the Owner, current Safety Data Sheets (SDS) for each controlled Product used. Submit SDS sheets for inclusion with project record.

.2 Retain SDSs for Contractor's safety program at Project site. Do NOT submit to Consultant. SDS's submitted to the Consultant will be returned to the Contractor without review and will be deleted from the submittal log.

1.20 **01 35 13 SPECIAL PROJECT PROCEDURES**

.1 Owner Requirements and Site Access:

.1 Contact Building Owner to determine rules and regulations for access to and working within the building. The Owner’s contact is:

General Inquires:

Meagan Sitek
Project Manager (Capital Projects)
Facilities & Asset Management: Planning, Design & Construction
msitek@wlu.ca
Office/Teams: 548-889-5146
Mobile: 519-802-1751

.2 Comply with Owner’s regulations for hours of work for cutting, coring, drilling, power fastening and other noise generating activities.

.3 Comply with Owner’s regulations for shipping, receiving, elevator use and security requirements. Pay all Owner charges for use of these facilities and services.

.4 Comply with Owner’s requirements for review of any cutting, coring or drilling by the base building engineers. Pay all base building engineers’ charges for review services.

.5 Comply with all base building design criteria. Notify the Owner and Consultant immediately of any discrepancies in the base building.

.6 Pay any charges imposed by the Owner's regulations or resulting from failure to comply with the regulations.

.7 Arrange with the Owner for HVAC shut down and smoke bypass as required.

.8 Provide supplemental mechanical ventilation as required by Owner. Do not commence fume producing operations without Owner approvals.

.9 Protect smoke alarm units during work hours, when personnel are present, and ensure that units are unobstructed and functional when space is unoccupied.

.2 Carry out work in such a manner as to cause a minimum of noise and interference to the use of the existing building.

.3 Subcontractor Changes:

.1 The Owner may reject a Subcontractor for any reason. Do not change a Subcontractor without prior approval from the Owner.

.4 Contractor Personnel Changes:

.1 Consult with the Owner prior to making changes to its organization on the Project and shall obtain the Owner's approval prior to removing or changing its' Project Manager or Superintendent, all at no extra cost to the Owner.

.2 If any of the Contractor's Project staff leave its employment before completion of the Project, such staff must be replaced immediately with staff of equal or better qualifications, as accepted by the Owner.

.5 Uninterrupted Owner Operations:

.1 For projects involving work within or adjacent to an operation that must continue, coordinate scheduling, temporary barriers and construction times with the Owner.

.2 Maintain operations of building services, data, telephone, and alarm systems. Ensure no interruptions of these services are caused by the execution of the Work.

.3 Arrange and coordinate all temporary service shut downs with the Owner so as not to interfere with continual operations.

.6 Hours of Construction Operations:

.1 Co-ordinate hours of construction operations with Owner's and tenant's representatives.

.2 Existing premises will maintain operations during business hours.

.3 All Work, which in the opinion of the Owner, or the tenant is noisy or otherwise disruptive to the tenant, the public or other tenants shall be done after the tenant's business hours. All other construction may be performed during regular business hours, subject to the Owner's approval.

.4 For the purposes of this subsection, no distinction is made between weekday or weekend operations.

.7 Discovery of Owner's or Tenant's Materials:

.1 Report immediately to the Owner the discovery by the Contractor or Subcontractors of any materials that would be reasonably considered the Owner's or the tenant's property. Follow the Owner's specific instructions for the storage, handling or disposal of these materials.

.2 Materials belonging to the Owner or to the tenant include but are not limited to equipment, files, electronics storage media (diskettes, CD's, flash memory drives, etc.), and publications.

1.21 **01 35 16 ALTERATION PROJECT PROCEDURES**

.1 General Requirements: Protect work, adjacent surfaces and materials during construction against disfigurement, contamination or damage from physical abuse or harmful materials. Provide protective covering where there is exposure to potential damage. Make good all damage that occurs during construction to match original condition.

.2 Computer Room Work Requirements:

.1 Protect work during construction against disfigurement, contamination or damage from physical abuse or harmful materials. Provide protective covering where there is exposure to potential damage. Make good all damage that occurs during construction to match original condition.

.2 Provide all required and necessary dust and noise control barriers. Construct dust barriers in a manner to restrict dust from flowing through floor and ceiling plenums to areas adjacent to the Work. Be especially diligent in the maintenance of such barriers when working adjacent to an area of Owner's operations.

.3 Coordinate with the Owner, the scheduling and location of required dust and noise barriers. Locate and erect barriers in such a manner that Owner's operation may safely continue.

.4 Provide protection and keep clear areas that are required for access to, and egress from occupied areas.

.5 Prior to commencing work, protect existing computer equipment within work area with drop cloths, air barriers, protective panels, and enclosures. Support from ceiling or other structure. Provide clearances recommended by Owner from all equipment. Do not impede or restrict the cooling of the equipment.

.6 Do not allow tools, drop cloths, materials, and construction aids to be placed on or against computer equipment.

.7 Keep work inside computer room to a minimum.

.8 Thoroughly clean tools, equipment, other construction aids and materials prior to bringing into computer room.

.9 Clean dust and debris from cabinets and adjacent areas daily, and at the end of construction prior to removing the dust barrier.

.10 Immediately remove waste material, debris and rubbish from computer room and associated pipe chases, plenums, access floor spaces, and above suspended ceiling.

.11 Convene a pre-construction meeting prior to commencing work in computer room with Owner, Consultants, and Subcontractors performing Work. Review Work schedule, access to computer room, protection of computer equipment and other components, user occupancy and operations, utility shut-downs, alarm system block-outs.

.12 To the extent possible perform cutting, drilling, welding, soldering, sanding, painting, finishing, and other construction operations outside computer room in location approved by Owner.

.13 Cutting: Remove ceiling panels, access floor panels, floor stringers and pedestals, and other components to be cut to location outside computer room designated by Owner.

.14 Continuously operate vacuum cleaner to remove residue when cutting, filing, drilling or other that similar work must be performed within computer room. Particles shall be removed by vacuum cleaner during operation producing residue. Vacuum cleaner to use HEPA filtration media and/or locate vacuum unit outside of the computer room with hose only in computer room.

.15 Perform fume producing operations outside of Owner's normal business hours. Provide supplemental mechanical ventilation as required by Owner. Do not commence fume producing operations without Owner approvals.

.16 Protect smoke alarm units during work hours, when personnel are present, and ensure that units are unobstructed and functional when space is unoccupied.

.17 At end of workday remove all tools and materials from computer room or place within room at location designated by Owner.

.3 Dust Free Environment:

.1 It is imperative that the building’s operational areas remain clean and dust free. It is the Contractors responsibility to ensure this. If the Contractor fails to maintain these conditions, the Owner reserves the right to retain the services of a professional maintenance company to fine clean the areas in question, and the invoiced costs for the cleaning services of the professional maintenance company shall be deducted from the Contractor’s next progress payment.

.2 Be responsible to keep operational areas clean and dust free. Prevent contamination of and nuisance to adjacent areas and properties near the Work from dust by taking appropriate dust control measures. Take measures to prevent dust and dirt rising and migrating to occupied areas including return air systems and/or adjacent properties. Respond immediately to complaints of dust received from the Consultant, Public, tenants, Owner’s Representative, authorities having jurisdiction and the Owner.

.3 Adjacent Work areas remaining in use by the building during construction period shall have furnishings, and equipment covered and protected from dust under this Contract. Completely install the dust covers and prior to commencement of each of the Contractor’s working periods and shall be also be removed upon the end the Contractor's work period. If required by the Owner’s Representative, the Provide additional dust covers and keep them in clean and usable conditions.

.4 Before the Work proceeds, Provide temporary dust-proof partitions and screens constructed as specified in Temporary Facilities and Controls, sealed at the

structural floor, raised floor, walls, ceilings, or intersecting members in a manner to prevent dust and dirt infiltration into adjacent areas of the existing building.

.5 Leave the Work area(s) remaining in use by the building clean and ready for use between each work period.

1.22 **01 35 26 GOVERNMENTAL SAFETY REQUIREMENTS**

.1 WHMIS legislation requires that all employers train their direct line employees on all aspects of WHMIS. Notify the Owner immediately of any accident occurring at the Place of the Work and submit copies of accident reports.

.2 Comply with the requirements of the Fire Marshal's office having jurisdiction. Where there are no local requirements. Where there is a conflict between requirements, comply with the most stringent requirement.

1.23 **01 35 31.19 CONSTRUCTION WASTE MANAGEMENT**

.1 Implement a Construction Waste Management Plan to maximize the diversion of demolition and construction waste from landfill disposal. Dispose of unsalvageable and non-recyclable waste.

.2 All sections of the specifications are affected by the requirements of this Section for effective waste reduction, reuse or recycling.

.3 Follow the requirements and best practices as described in the following referenced standards:

.1 Canadian Construction Association (CCA) CCA 27, A Guide on Construction Environmental Management Planning and, CCA 81, A Best Practices Guide to Solid Waste Reduction.

.2 Public Works and Government Services Canada (PWGSC) National Construction Renovation and Demolition Non-Hazardous Solid Waste Management Protocol and, The Environmentally Responsible Construction and Renovation Handbook.

.3 Comply with local environmental protection regulations, solid waste services and other waste management authorities having jurisdiction at the Place of Work.

.4 Ontario Environmental Protection Act Ontario Regulation 102/94 Waste Audits and Waste Reduction Work plans and related Ministry of the Environment guide.

.5 Ontario Environmental Protection Act. Ontario Regulation 103/94: Industrial, Commercial and Institutional Source Separation Programs and related Ministry of the Environment guide.

.4 Definitions:

.1 Construction Waste Management Plan - inclusive of the Waste Audit (WA), Waste Management Work plan (WMW) and the Materials Source Separation Program (MSSP).

.2 Inert Fill - inert waste, exclusively asphalt and concrete.

.3 Materials Source Separation Program (MSSP) - a series of on-going activities to separate reusable and recyclable waste material into material categories from other types of waste at point of generation.

.4 Recyclable - ability of product or material to be recovered at the end of its life cycle and re-manufactured into new product.

.5 Recycle - process by which waste and recyclable materials are transformed or collected for purpose of being re-manufactured into new product.

.6 Reuse - repeated use of product in the same form but not necessarily the same purpose. For example: wood pallets or crushed concrete used as clean fill.

.7 Source Separation - act of keeping different waste types separate for distribution into appropriate recycling/disposal bins.

.5 Comply with Canadian Construction Association's "Code of Practice" outlined in Standard Construction Document CCA 27 to encourage improved waste management practices.

.6 Provide requested submittals in accordance with Section 01 33 00 Submittal Procedures.

.7 Prepare and submit, prior to project start-up, 2 copies of each of: Waste Audit, Waste Reduction Work plan, and Materials Source Separation Plan.

.8 Submit a Waste Reduction Work plan (WRW); structured to follow the hierarchy of the 3Rs: reduce; reuse; recycle, prior to project start-up (within 30 days of contract signature).

.1 WRW to include but not be limited to:

.1 Forecast for each applicable waste stream of the percentage of waste expected to be diverted over the course of the Project Provisions for all materials taken off-site, Provisions to reduce packaging materials entering the Project site to reduce the total waste amount, Destination of materials, Security, Protection, Clear labelling of storage areas, Details on materials handling and removal, Quantities of materials to be salvaged for reuse or recycling, and materials sent to landfill, Procedure to monitor the diversion rate throughout the Project duration, i.e. through the collection of waybills or other reports from the waste management company.

.2 Submit waste reduction reports containing the information noted below to the Owner's authorized agent once every two weeks for the duration of the Project using the format provided by the Owner.

.3 For each waste stream, collect, track and report the following information:

.1 Trade: the name of the contractor completing the recycling activities whether own forces or subcontractor.

.2 Total Waste Material; for each waste stream the total mass in kilograms of waste produced as part of the Work for the Project.

.3 Reused Off Site: for each waste stream the total mass in kilograms of waste that was reused by third parties at locations other than the Place of the Work.

.4 Reused On-Site: for each waste stream the total mass in kilograms of waste that was reused by the Contractor in the execution of the Work.

.5 Sent to Recycling Facility: for each waste stream the total mass in kilograms of waste sent to a recycling facility.

.6 Sent to Landfill: for each waste stream the total mass in kilograms of waste sent to a landfill for disposal.

.7 Contractor Used: for each waste stream the total mass in kilograms of waste sent used by the Contractor (or Subcontractor) for purposes other than the Project.

.8 Estimated Diverted Material: for each waste stream the total mass in kilograms of waste that at the outset of the Project the Contractor estimates can be diverted from landfill.

.9 Actual Diverted Material: for each waste stream the total mass in kilograms of waste that based on actual verifiable data can be shown to have been diverted from landfill.

.10 Type of Verification: for each waste stream, the type of supporting documentation provided to substantiate the claims of waste diversion.

.11 Notes: any additional information required to be provided with respect to each waste stream.

.4 Identify opportunities for reduction, reuse and recycling of materials according to information from the waste audit.

.5 Set realistic goals for waste reduction, recognize existing barriers and develop strategies to overcome these obstacles.

.6 Monitor and report on waste reduction by documenting total volume and cost of actual waste removed from project.

.9 Obtain from the Owner, and comply with the Owner's requirements for waste management, source separation, waste disposal and waste management reporting.

.10 Materials source separation program (MSSP) to be prepared prior to project start-up. Implement MSSP for waste generated on site in compliance with approved methods and as reviewed by Consultant. Provide conveniently located, on-site facilities for collection, handling and storage of anticipated quantities of reusable, recyclable and waste materials.

.11 Separate materials for reuse and recycling from general waste stream and stockpile in separate marked piles or containers consistent with applicable fire regulations and as acceptable to Consultant. Unless otherwise indicated, materials for removal are the property of the Contractor. Prevent contamination of materials for reuse and recycling by handling in accordance with requirements for acceptance by designated facilities.

.12 Implement suitable measures to prevent fragile materials such as fluorescent lamps from being damaged prior to recycling or disposal.

.13 Do not bury rubbish or waste materials. Hazardous materials to be separated from landfill waste and disposed of according to local regulations.

.1 Keep records of construction waste: Number and size of bins, Waste type per bin, Total weight in tonnes of landfill waste, Total weight in tonnes of hazardous waste, Total weight in tonnes of reused materials, Total weight in tonnes of recycled materials and, Destination of all materials.

.14 Waste Management Plan Implementation:

.1 Invite suppliers to retrieve/retain packaging after delivery (for reuse), Prevent material damage due to mishandling, improper storage, and contamination and, use prefabricated assemblies built at a central facility (when possible) to avoid waste generation at the site.

.2 Contact local salvaging/recycling facilities and arrange for recycling services. Only facilities operating under a Certificate of Approval as required by the authority having jurisdiction are acceptable. Certificates issued under the Environmental Protection Act of the Place of Work are acceptable. Provide on-site bins for the collection, handling, and storage of waste that are sized to accommodate expected waste quantities. Follow the material acceptance requirements of the salvaging/recycling facilities so that materials are sorted, grouped and packaged. Provide separate, labelled containers for each of the material types as required by salvaging/recycling facilities. Provide separate containers for "Blue Box" waste (generated by site workers) collected in a mixed condition that shall be separated for recycling off-site. The waste deposited in this container shall include those materials acceptable to the local recycling program. Protect materials from damage and contamination.

.3 Coordinate delivery of separated materials to approved salvage or recycling facilities. Retain waybills for inclusion in final waste diversion report as per Owner's requirements. Assemble documentation from each receiving facility to corroborate that the waste was (or will be) actually recycled/salvaged.

.15 Provide on-site instruction of appropriate separation, handling, and recycling, salvage, reuse, composting and return methods to be used by all parties at the appropriate stages of the Project.

.16 Lay out and label a specific area to facilitate separation of materials for potential recycling, salvage, reuse, composting and return, consistent with applicable fire regulations. Keep recycling and waste bin areas neat, clean and clearly marked in order to avoid contamination of materials.

.17 Sub-Contractors to cooperate fully with the Contractor to implement the Construction Waste Management Plan.

.18 Be responsible for implementation of programs involving tax credits or rebates or similar incentives related to recycling, if applicable to the Project. Revenues or other savings obtained for recycling or returns shall accrue to the Contractor. Document recycled materials, and implement work methods, alternate disposal methods, etc., that qualify for tax credits, rebates, and other savings under available programs.

.19 Obtain information packets relevant to all programs that may be available prior to starting work on the Project, and confirm each facility's ability to accept waste from the Project.

.20 Clean materials that are contaminated before placing in collection containers. Deliver materials free of dirt, adhesives, solvents, petroleum contamination, and other substances deleterious to recycling processes. Arrange for collection by or delivery to the appropriate recycling or reuse facility. Handle hazardous waste and hazardous materials in accordance with applicable regulations.

.21 Compost organic waste materials in accordance with the Composting Council of Canada recommendations.

.22 The following products should be able to achieve a minimum 75% diversion: cardboard, plastic packaging, rubble, steel, wood.

1.24 **01 35 43.13 ENVIRONMENTAL PROCEDURES FOR HAZARDOUS MATERIALS**

.1 Any Designated Substances and Hazardous Materials Report included is for reference only, with the understanding that it is not a comprehensive study or complete report of existing conditions which may exist at the Place of the Work. Immediately advise the Owner and Consultant of conditions about which they have knowledge or information.

.2 Neither the Owner nor the designated substances and hazardous materials Consultant guarantee the accuracy or completeness of any Designated Substances and Hazardous Materials Report. Examine the existing conditions which may affect methods or cost of construction before commencing the Work of the Contract.

.3 Immediately report any unexpected discovery of material that may contain a designated substance regulated by an authority having jurisdiction. Stop work in the area until Owner authorizes continuation of work.

.4 All work involving designated substance-containing materials shall be performed in accordance with the applicable regulations governing designated substances, and Owner's regulations for designated substance related work.

.5 Provide project inspection and air monitoring services for all designated substance-related work by a qualified designated substances and hazardous materials Consultant. All costs associated with designated substance-related work (i.e., precautions, site inspections, air monitoring, etc.) shall be the direct responsibility of the Contractor. Connect a phone line into the contaminated area and run it out to a public area for communication.

.6 All clean up removal and disposal of designated substances shall conform to the applicable federal, provincial municipal laws, codes, and regulations for the Place of the Work. Provide documentation identifying any designated substances found and detailing the means, method and location of disposal.

1.25 **01 35 53 SECURITY PROCEDURES**

.1 Provide for the security of occupants and for the security of occupied areas

.2 Be responsible for the security of the Place of the Work and for preventing access by non-workers. The Owner and the tenant accept no responsibility for losses, damage or theft of Contractor's tools, equipment, Products or Work.

.3 Provide temporary paper or film visual obstruction at all glazed areas exposed to public view for visual control.

.4 Under no circumstances is the Contractor or their Subcontractors to use the Owner's or tenant's equipment or any equipment located in the Place of the Work including, but not limited to, computers, faxes or photocopiers.

.5 All persons not employed by the Owner or the tenant shall wear a legible numbered or photograph type identification patch or tag acceptable to the Owner on their person, plainly visible at all times, on which the name of the individual and that of the employer company is clearly indicated.

.6 Contractor's Contract Documents on site are to be stored in a secure location that shall ensure they can be viewed or updated only under the direct supervision of the Contractor's superintendent.

.7 Use of the subcontractor's Contract Documents on site is to be monitored by the trade or subcontractor's representative on site. The Contract Documents are to be locked up at the end of each work shift, either in a lockable job box or in the Contractor's secure facility on site.

1.26 **01 41 13 CODES**

.1 The Ontario Building Code 2024 as amended governs the Work.

.2 The seismic zone of the Place of the Work according to NRC Seismic Hazard Map, National Building Code and Ontario Building Code Part 4 Supplement SB-1 and Sa (0.2s).

.3 The seismic parameters applicable to the Place of the Work as per Waterloo Building Code and Building Code reference OBC 4.1.8. are as follows: parameters Sa(0.2) = 0.09g.

1.27 **01 42 00 REFERENCE STANDARDS**

.1 Materials, equipment, and operations specified by reference to published standards and specifications of a technical society, trade association, or other agency standard, shall comply with the requirements of the current edition of the listed document that is in effect on the issue date of the Contract Document or Addendum making reference thereto, unless otherwise specified or unless otherwise cited in the Building Code.

.1 No provision of a referenced standard, specification, manual, or code shall be effective to change the duties and responsibilities of the Owner, the Contractor, the Architect and their consultants, their agents and employees from those duties and responsibilities set forth in the Contract Documents.

.2 Where requirements differ among the referenced documents, the most stringent requirements shall apply.

.2 Abbreviations and Acronyms for Code Agencies: Where abbreviations and acronyms are used in Specifications or other Contract Documents, they shall mean the recognized name of the entities in the following list. Names, telephone numbers, and Web sites are subject to change and are believed to be accurate and up-to-date as of the date of the Contract Documents.

1.28 **01 43 00 QUALITY ASSURANCE**

.1 Definitions:

.1 Quality-Assurance Services: Activities, actions, and procedures performed before and during execution of the Work to guard against defects and deficiencies and substantiate that proposed construction shall comply with requirements.

.2 Quality-Control Services: Testing and inspecting services are required to verify compliance with requirements specified or indicated. These services do not relieve Contractor of responsibility for compliance with the Contract Document requirements.

.3 Experienced: When used with an entity or individual, "experienced" means having successfully completed a minimum of five previous projects similar in nature, size, and extent to this Project; being familiar with special requirements indicated; and having complied with requirements of authorities having jurisdiction.

.2 Conflicting Requirements

.1 Referenced Standards: If compliance with two or more standards is specified and the standards establish different or conflicting requirements for minimum quantities or quality levels, comply with the most stringent requirement. Refer conflicting requirements that are different, but apparently equal, to Consultant for a decision before proceeding.

.2 Minimum Quantity or Quality Levels: The quantity or quality level shown or specified shall be the minimum provided or performed. The actual installation may comply exactly with the minimum quantity or quality specified, or it may exceed the minimum within reasonable limits. To comply with these requirements, indicated numeric values are minimum or maximum, as appropriate, for the context of requirements. Refer uncertainties to Consultant for a decision before proceeding.

.3 Quality Control:

.1 Owner Responsibilities: Owner shall engage a qualified testing agency to perform special inspections required by authorities having jurisdiction.

.2 Contractor Responsibilities: Provide access to the Work to allow for testing and sampling. Tests and inspections not explicitly assigned to Owner are Contractor's responsibility. Perform additional quality-control activities required to verify that the Work complies with requirements, whether specified or not.

.3 Retesting/Reinspecting: Regardless of whether original tests or inspections were Contractor's responsibility, provide quality-control services, including retesting and reinspecting, for construction that replaced Work that failed to comply with the Contract Documents and failed to comply to the satisfaction of the Owner and Consultant.

.4 Repair and Protection: Contractor's responsibility, regardless of the assignment of responsibility for quality-control services.

.4 All work must be done by workers skilled in each section of the work. The highest quality standards set by each industry authority or trade guild shall govern the work.

.5 Where an industry or government standard does not exist, materials and systems shall be installed in accordance with product manufacturer's written installation instructions. Report any discrepancies between the manufacturer’s recommendations and contract documents to the Consultant for resolution prior to proceeding with the Work.

.6 Provide a warranty that all work shall be free from all inherent defects in design, workmanship, or material and shall give proper and continuous service under all normal conditions of service. Replace promptly at no expense to the Owner any part of the Work proving defective within one year from the date of completion, or for a longer period of time where specified.

1.29 **01 43 39 MOCKUPS**

.1 Prepare mockups on site in a timely manner to allow for Consultant review, so as not to delay construction progress. Be responsible for delays resulting from late preparation.

.2 Where mockups are acceptable to the Consultant, they shall be incorporated into the Work.

.3 Coordinate with the Consultant the location and extent of the mockups.

MOCKUPS REQUIRED **Work shall not proceed until Consultants have reviewed and accepted mockups**
• Paint showing each colour and gloss level Paint shall be applied to each substrate type on an entire wall or ceiling surface. • Each type of tile complete with grout. • Each type of wall covering • Each type of carpet and carpet base • Each type of resilient flooring and base • Each type of wood base

1.30 **01 45 23 TESTING AND INSPECTION SERVICES**

.1 Having inspection and testing companies does not in any way relieve the Contractor and the Subcontractors from their contractual responsibility to perform the Work in conformance with the applicable specification Sections, drawings, schedules and reviewed shop drawings, regardless of the inspections and tests, which are only to verify conditions and to be regarded as an aid to the Work alone.

.2 Inspection and testing companies shall immediately report all observed deviations from the drawings and specifications directly to the Consultant and the Contractor. Instructions to inspection and testing companies shall be given by the Contractor.

.3 Inspection and testing shall be ordered by the Contractor, and carried out by independent inspection and testing companies or agents appointed by the Owner's Project Manager.

.4 Supply a set of drawings, specifications and schedules including all addenda, approved changes to the Work, and request for information responses for the use of the inspection and testing companies. Subcontractors shall be advised by the Contractor of the inspection and testing appointments.

.5 Advise the appropriate inspection and testing companies not less than forty-eight (48) hours prior to the commencement of any Work to be inspected and tested. Contractor shall ensure that proper facilities are provided and co-operate fully with the respective inspection and testing companies and their inspectors.

.6 Remove and replace Product(s) indicated in inspection and test reports as failing to comply with specifications without increase to the Contract Price.

.7 Correct improper installation procedures reported in inspection and test reports without increase to the Contract Price.

.8 Pay costs for re-inspection and testing of replaced Work as directed by the Consultant without increase to the Contract Price. Contractors shall be responsible for delays due to the corrective part of the Work

.9 Each inspection and testing company must report each inspection and/or test individually, comprehensively, in writing and signed by an authorized representative of the applicable inspection and testing company. Distribute reports directly to the Contractor, Consultants, Owner's Project Manager and Building Department.

.10 In addition to the inspection and testing requirements listed herein, refer to the individual project requirements sections.

1.31 **01 50 00 TEMPORARY FACILITIES AND CONTROLS**

.1 Quality Assurance:

.1 Qualifications: Use qualified personnel to install temporary facilities. Locate facilities where they will serve the Project adequately and result in minimum interference with performance of the Work. Relocate and modify facilities as required.

.2 Standards: Comply with NFPA 241 "Standard for Safeguarding Construction, Alterations, and Demolition Operations," ANSI A10 Series standards for "Safety Requirements for Construction and Demolition," and NECA Electrical Design Library "Temporary Electrical Facilities."

.2 Submittals:

.1 Provide plan detailing how the work areas will be isolated in occupied facilities with dust and soundproof partitions.

.2 Include information detailing the following:

.1 Fire Safety Plan: Provide all life safety equipment as required by building, fire and labour codes.

.2 Lighting: Provide temporary lighting in work areas complying with local requirements.

.3 Dust and HVAC control Plan: Submit coordination drawing and narrative that indicates the dust and HVAC-control measures proposed for use, proposed locations, and proposed time frame for their operation. Identify further options if proposed measures are later determined to be inadequate. Include the following:

.1 Locations of dust-control partitions at each phase of work.

.2 HVAC system isolation schematic drawing.

.3 Location of proposed air-filtration system discharge.

.4 Waste handling procedures.

.5 Other dust-control measures.

.4 Contractor's Moisture Protection Plan: Avoid trapping water in finished work. Document visible signs of mold that may appear during construction

.3 Materials and Equipment:

.1 Fire Extinguishers: Provide portable fire extinguishers as required in locations at the Place of the Work under construction where hot work operations are carried out, combustibles are stored, internal combustion engines are located, flammable and combustible liquids, and flammable compressed gases are stored or handled, and temporary or permanent fuel-fired equipment is used.

.2 HVAC Equipment: Use existing building system. Provide filter with MERV of 8 at each return-air grille and clean HVAC system.

.3 Dust-Control Adhesive-Surface Walk-off Mats: Provide mats minimum 36 by 60 inches.

.4 Dust Control Partitions Polyethylene Sheet: Reinforced, fire resistive sheet, minimum 6 mil minimum thickness, with flame-spread rating of 15 or less in conformance with CAN/ULC-S102.

.5 Floor Protection: Masonite hardboard panels or other suitable material.

.4 Coordinate with The Owner or Building Management:

.1 Elevator use.

.2 Sanitary facility use.

.3 Storage facilities

.5 Existing Utilities and Facilities: Maintain existing utilities and services to existing facilities indicated to remain, keep in service, and protect against damage during demolition operations. Provide minimum 72 hour advance notice to Owner's Representative if service shutdown is necessary.

.1 If disconnections or damage occur, repair or replace items with materials, construction, and improvements matching existing undamaged work and restore to original conditions.

.2 Provide temporary protection of the work until removal of temporary protection is approved by Consultant.

.6 Temporary Utilities: Use of existing water, permanent fire protection, electrical power service and lighting, heating, air conditioning, and toilets within the Work areas is subject to the terms of the Owner's Lease Agreement.

.1 Where use of existing utilities is permitted, provide temporary connections to existing utility service for temporary work in accordance with regulatory requirements and regulations of respective utility companies

.2 Verify if existing utilities are adequate for use during construction. If inadequate, coordinate with utility companies to secure additional lines and facilities. Do not overload or damage existing utilities in any manner.

.3 Use Charges: Sewer, Water, and Electric Power are available from existing system without charge.

.7 Isolation of Work Areas in Occupied Facilities: Prevent dust, fumes, and odours from entering occupied areas.

.1 Prior to commencing work, isolate the HVAC system in area where work is to be performed according to coordination drawings.

.1 Disconnect supply and return ductwork in work area from HVAC systems servicing occupied areas.

.2 Maintain negative air pressure within work area using HEPA-equipped air-filtration units, starting with commencement of temporary partition construction, and continuing until removal of temporary partitions is complete.

.2 Maintain dust partitions during the Work. Use vacuum collection attachments on dust-producing equipment. Isolate limited work within occupied areas using portable dust-containment devices.

.3 Perform daily construction cleanup and final cleanup using approved, HEPA-filter-equipped vacuum equipment.

.8 Temporary Egress: Maintain temporary egress from existing occupied facilities as indicated and as required by authorities having jurisdiction.

.9 Temporary Enclosures: Provide temporary enclosures for protection of construction, in progress and completed, from exposure, foul weather, other construction operations, and similar activities. Provide temporary weathertight enclosure for building exterior.

.1 Where heating or cooling is needed and permanent enclosure is incomplete, insulate temporary enclosures.

.10 Temporary Partitions: Provide floor-to-ceiling dustproof partitions to limit dust and dirt migration and to separate occupied areas from fumes and noise

.1 Construct dustproof partitions with two layers of minimum 6 mil (0.15 mm) polyethylene sheet on each side. Cover floor with two layers of minimum 6 mil (0.15 mm) polyethylene sheet, extending sheets 18 inches (457 mm) up the sidewalls. Overlap and tape full length of joints. Cover floor with fire retardant treated plywood.

.2 Construct vestibule and airlock at each entrance through temporary partition with not less than 48 inches (1,220 mm) between doors. Maintain water-dampened foot mats in vestibule.

.3 Insulate partitions to control noise transmission to occupied areas.

.4 Seal joints and perimeter. Equip partitions with gasketed dustproof doors and security locks where openings are required.

.5 Protect air-handling equipment.

.6 Provide walk-off mats at each entrance through temporary partition.

.11 Temporary Fire Protection: Install and maintain temporary fire protection facilities of types needed to protect against reasonably predictable and controllable fire losses.

.1 Supervise welding operations, combustion-type temporary heating units, and similar sources of fire ignition according to requirements of authorities having jurisdiction.

.2 Develop and supervise an overall fire prevention and protection program for personnel at Project site. Review needs with local fire department and establish procedures to be followed. Instruct personnel in methods and procedures. Post warnings and information.

.12 Controlled Construction Phase of Construction: After completing and sealing of the building enclosure but prior to the full operation of permanent HVAC systems, maintain as follows:

.1 Control moisture and humidity inside building by maintaining effective dry-in conditions.

.2 Use permanent HVAC system to control humidity.

.3 Comply with manufacturer's written instructions for temperature, relative humidity, and exposure to water limits.

.1 Hygroscopic materials that may support mold growth, including wood and gypsum-based products, that become wet during the course of construction and remain wet for 48 hours are considered defective.

.2 Measure moisture content of materials that have been exposed to moisture during construction operations or after installation. Record readings beginning at time of exposure and continuing daily for 48 hours. Identify materials containing moisture levels higher than allowed. Report findings in writing to the Consultant.

.3 Remove materials that cannot be completely restored to their manufactured moisture level within 48 hours.

.13 Termination and Removal: Remove each temporary facility when need for its service has ended, when it has been replaced by authorized use of a permanent facility, or no later than Substantial Completion. Complete or, if necessary, restore permanent construction that may have been delayed because of interference with temporary facility. Repair damaged Work, clean exposed surfaces, and replace construction that cannot be satisfactorily repaired.

.14 Remove all rubbish and waste materials from the premises in accordance with Owner's rules and regulations, but no less than once daily.

.15 Keep all existing facilities and services clean and in good working condition. Clean or replace changeable filter media and turn over with new filter media at completion of work.

.16 Security: Maintain the Place of the Work in a lockable condition during the period of this work when the Contractor’s workers are not present at the jobsite.

.17 Temporary use of new permanent service and equipment

.1 Do not use any permanent service or equipment without Owner's written approval. Comply with Owner's instructions regarding use of permanent services and equipment.

.2 Permanent services and equipment, including the roof top units, shall be substantially complete and certified by Consultant to be in proper operating condition before they may be used as temporary facilities.

.3 Pay for fuel and operating costs.

.4 Inspect permanent services and equipment being used as temporary facilities on a regular basis during use.

.5 Provide competent persons to operate and maintain permanent systems for duration of temporary use period.

.6 If required, perform repairs and maintenance immediately after each inspection. Upon termination of temporary use period, services and equipment shall be inspected, tested, adjusted, balanced and cleaned. Temporary filters shall be replaced with new filters.

.7 If Owner authorizes use of permanent HVAC system for temporary use during construction, provide filter with MERV of 8 at each return-air grille in system and remove at end of construction and clean HVAC system as required in Execution Requirements.

.8 Permanent services and equipment shall be turned over to Owner in new and perfect operating condition.

.9 Use of permanent systems and equipment as temporary facilities shall not affect the warranty conditions and warranty period for such systems and equipment. Ensure that Owner shall receive full benefits of equipment manufacturers' warranties after Project takeover.

.18 Permanent lighting may be used during construction subject to the Building Owner's approval. Provide all additional lighting required to meet light level requirements needed for construction. Remove all temporary and redundant wiring before the date of Substantial Performance of the Work.

.19 Permanent sanitary facilities in the existing building (in locations designated by Property Management) may be used during construction subject to the Building Owner's approval. At no additional cost, provide any additional cleaning required to maintain building standards as determined by the Owner/Property Management.

1.32 **01 55 00 VEHICULAR ACCESS AND PARKING**

.1 Neither the Owner nor the tenant shall provide any parking facilities; Contractors must make their own arrangements.

1.33 **01 56 00 TEMPORARY BARRIERS AND ENCLOSURES**

.1 Remove all rubbish and waste materials from site

.2 Protect work during construction against disfigurement, contamination or damage from physical abuse or harmful materials. Provide protective covering where there is exposure to potential damage. Make good all damage that occurs during construction to match original condition.

.3 Provide all required and necessary dust and noise control barriers. Construct dust barriers in a manner to restrict dust from flowing through plenums to areas adjacent to the Work. Be especially diligent in the maintenance of such barriers when working adjacent to an area of Owner's operations.

.4 Coordinate with the Owner and the tenant, the scheduling and location of required dust and noise barriers. Locate and erect barriers in such a manner that Owners operation may safely continue.

.5 Provide protection and keep clear areas that are required for access to, and egress from occupied areas.

1.34 **01 58 13 TEMPORARY PROJECT SIGNAGE**

.1 No signs, public announcement or publications concerning any aspect of this Project shall be allowed without the prior approval of the Owner, the only exception being the signs related to safety of the Work as required by law or regulations.

.2 Provide temporary informational, wayfinding, and egressing signage professional printed and laminated customized for each phase.

1.35 **01 65 00 PRODUCT REQUIREMENTS**

.1 General: Provide products that comply with the Contract Documents, that are undamaged and, unless otherwise indicated, new at the time of installation.

.2 Source Limitations: To the fullest extent possible, provide products of the same kind from a single source.

.3 Visual Matching Specification: Product that matches Consultant's sample. Consultant's decision shall be final.

.4 Visual Selection Specification: Product (and manufacturer) that complies with other specified requirements. Consultant shall select colour, gloss, pattern, density, or texture from manufacturer's product line that includes both standard and premium items.

.5 Products: When the Contractor is given the option of selecting between two or more products for use on the Project, the product selected shall be compatible with products previously selected, even if previously selected products were also options.

.1 Provide products complete with accessories, trim, finish, fasteners, and other items needed for a complete installation and indicated use and effect.

.2 Standard Products: If available, and unless custom products or nonstandard options are specified, provide standard products of types that have been produced and used successfully in similar situations on other projects.

.3 Where products are accompanied by the term "as selected," the Design Professional shall make selection.

.4 Descriptive, performance, and reference standard requirements in the Specifications establish characteristics of products.

.6 Expiration Date: Date sensitive equipment, systems, components, and software shall function to the satisfaction of the Consultant, calculate dates including century and leap year calculations, and shall do so for the life expectancy of the equipment.

.7 Labels: Except for required labels and operating data, do not attach or imprint manufacturers' or producer's nameplates or trademarks on exposed surfaces of products that will be exposed to view in occupied spaces or on the exterior.

.8 Environmentally Responsible: Provide products that minimize adverse effects on the environment, and that minimize the consumption of energy, water, construction materials, and other resources.

.9 Compliance: Where Specifications require compliance with an imposed code, standard, or regulation, select products that comply with the standards, codes, or regulations specified.

.10 Delivery, Storage and Handling: Deliver, store, and handle products according to the product manufacturer's written recommendations, using means and methods that shall prevent damage, deterioration, and loss, including theft.

.1 All deliveries to the Place of the Work shall be scheduled so that there will be minimal on-site storage. Arrange for safe off-site storage.

.2 Deliveries through areas open to the public must be approved by the Owner, and timed for minimum disruption to the operation of the facility.

.3 Deliveries are to be after hours unless agreed to and coordinated with the Owner and tenant ahead of time. Tenant shall not sign for or accept any deliveries.

.4 Provide any necessary protection or shoring as required.

.11 Warranties: Warranties shall be in addition to, and run concurrent with, other warranties required by the Contract Documents. Manufacturer's disclaimers and limitations on product warranties do not relieve Contractor of obligations under requirements of the Contract Documents. Warranty period commences on the date of Substantial Completion.

.1 Manufacturer's Warranty: Written warranty furnished by individual manufacturers for a particular product and specifically endorsed by manufacturer to Owner.

.2 Special Warranty: Written warranty required by the Contract Documents to provide specific rights for Owner.

1.36 **01 71 16 ACCEPTANCE OF CONDITIONS**

.1 Examine substrate surfaces to receive the Work and ensure that there are no conditions that will adversely affect the performance of the Work. Do not proceed with Work until unsatisfactory conditions have been corrected. Commencement of Work implies acceptance of surfaces and conditions.

1.37 **01 73 00 EXECUTION**

.1 Protection: Protect work and property of others until final acceptance. Secure and lock the premises when workmen are not present.

.1 During demolition and construction period, maintain existing exit signs, exit lighting, fire protection devices, and alarms. Comply with Owner's rules and regulations.

.2 Maintain required paths of egress free from obstructions and impediments.

.3 Do not load or permit to be loaded any part of the Work with a weight or force that will endanger the safety or integrity of the Work.

.2 Construction layout: Be responsible for laying out the Work and for lines and measurements for the Work.

.1 Check and verify dimensions shown on the Drawings and conditions at the job site prior to laying out the Work.

.2 Establish dimensions within tolerances indicated. Do not scale Drawings to obtain required dimensions. Large scale details govern over smaller scale details.

.3 Notify Consultant when chalk line layout of partitions is completed for verification. Make required changes prior to start of construction.

.4 Door openings in gypsum board partitions not dimensioned shall be located in center of room or 4 inches from adjoining partition.

.3 Quantities and Sizes: Provide materials of the size and quantity necessary to accomplish the Work and satisfy performance criteria. Provide accessories and support items required to incorporate items specific in the finish work, whether shown or not shown.

.4 Existing Conditions: The Contract Documents are not guaranteed to represent all conditions that will be encountered.

.1 Records of existing construction represent conditions known to the Owner and Consultant. Other construction, of which no records are available, may be encountered.

.2 Conduct project site survey to confirm extent of existing conditions. Verify portions of work to be provided in lease allowance. Review the Contract Documents and field conditions.

.3 By commencing Work, the Contractor represents that he has examined the site, familiarized himself with the local conditions under which the Work is to be performed, resolved questions regarding dimensions, quantity, sizes, performance criteria and other concerns, and correlated his observations with the requirements of the Contract Documents.

.5 Manufacturer's Instructions: Comply with manufacturer's written instructions and recommendations for installing products in applications indicated.

.6 Installation: Locate the Work and components of the Work accurately, in correct alignment and elevation, as indicated.

.1 Make vertical work plumb and make horizontal work level.

.2 Where space is limited, install components to maximize space available for maintenance and ease of removal for replacement.

.3 Conceal pipes, ducts, and wiring in finished areas unless otherwise indicated.

.4 Maintain minimum headroom clearance of 96 inches in occupied spaces and 90 inches in unoccupied spaces.

.7 Templates: Obtain and distribute to the parties involved templates for work specified to be factory prepared and field installed. Check Shop Drawings of other work to confirm that adequate provisions are made for locating and installing products to comply with indicated requirements. Provide elevator dimensions and maximum container sizes to subcontractors.

.8 Attachment: Provide blocking and attachment plates and anchors and fasteners of adequate size and number to securely anchor each component in place, accurately located and aligned with other portions of the Work. Where size and type of attachments are not indicated, verify size and type required for load conditions.

.1 Mounting Heights: Where mounting heights are not indicated, mount components at heights directed by Consultant.

.2 Allow for building movement, including thermal expansion and contraction.

.3 Coordinate installation of anchorages. Furnish setting drawings, templates, and directions for installing anchorages, including sleeves, concrete inserts, anchor bolts, and items with integral anchors, that are to be embedded in concrete or masonry. Deliver such items to Project site in time for installation.

.9 Joints: Make joints of uniform width. Where joint locations in exposed work are not indicated, arrange joints for the best visual effect. Fit exposed connections together to form hairline joints.

.10 Hazardous Materials: Use products, cleaners, and installation materials that are not considered hazardous.

.11 Clean Project site and work areas daily, including common areas. Enforce requirements cleaning requirements. Dispose of materials lawfully. Remove debris from concealed spaces before enclosing the space.

1.38 **01 73 29 CUTTING AND PATCHING**

.1 General:

.1 Provide temporary support.

.2 Protect in-place construction.

.3 Protect adjacent occupied areas.

.4 Existing Utility Services and Mechanical/Electrical Systems:

.2 Submittals: Submit a proposal describing procedures well in advance of the time cutting and patching will be performed before proceeding. Request approval to proceed. Include the following information, as applicable, in the proposal:

.1 Describe the extent of cutting and patching required.

.2 Describe anticipated results in terms of changes to existing construction

.3 List products to be used and firms or entities that will perform Work.

.4 Indicate dates when cutting and patching will be performed.

.5 List utilities that cutting and patching procedures will disturb or affect.

.6 Where cutting and patching involves adding reinforcement to structural elements, submit details and delegated design letter of certification prepared and sealed by a Structural Engineer licensed in the jurisdiction where the Project is located certifying that the loads and reactions imposed by the integration of reinforcement with the original structure are sufficient and in compliance with applicable codes and regulations.

.7 Approval by the Consultant to proceed with cutting and patching does not waive the Consultant's right to later require complete removal and replacement of unsatisfactory work.

.3 Materials:

.1 Materials used to patch, repair, refinish, restore, and replace shall comply with Local Building Codes, and authorities having jurisdiction and the requirements of the EPA.

.2 Use new materials to replace existing, and processes to refinish existing that comply with those specified in Sections of these Specifications.

.3 Where materials or procedures have not been specified within this Contract, they shall comply with the highest standards of materials and workmanship set by recognized industry standards and associations.

.4 Coordinate and perform the Work to ensure that cutting and patching work is kept to a minimum.

.5 Perform cutting, fitting, patching, and remedial work to make the affected parts of the Work come together properly and complete the Work.

.6 Perform cutting, patching, and remedial work using competent and qualified specialists familiar with the Products affected, in a manner that neither damages nor endangers the Work.

.7 Minimize interruption to occupied areas.

.8 Cutting: Cut existing construction by sawing, drilling, chipping, grinding and similar operations, using methods least likely to damage elements retained and adjoining construction. Comply with best industry practices for cutting and patching and as follows:

.1 In general, where cutting is required use hand or small power tools designed for sawing or grinding, not hammering and chopping.

.2 Cut holes and slots as small as possible, neatly to size required with minimum disturbance of adjacent surfaces.

.3 Cut or drill from the exposed or finished side into concealed surfaces.

.4 Cut existing construction using methods least likely to damage elements to be retained or adjoining construction.

.5 Temporarily cover openings when not in use.

.6 To avoid marring existing finished surfaces, cut or drill from the exposed or finished side into concealed surfaces.

.9 Cut through concrete and masonry using a cutting machine such as a carborundum saw or diamond core drill. In general, demolish masonry in small sections. Where necessary to prevent collapse of any construction, install temporary shores, struts or bracing.

.10 Cut out embedded anchorage and attachment items as required to provide for patching and repair of the respective finishes.

.11 Bypass utility services such as pipe or conduit, before cutting, where services are shown or required to be removed, relocated or abandoned. Cut off pipe or conduit in walls or partitions to be removed. Cap, valve or plug and seal the remaining portion of pipe or conduit to prevent entrance of moisture or other foreign matter after bypassing and cutting. Do not cut existing utilities unless prior written approval from the building management is obtained 72 hours prior to utility shutdown.

.12 Do not cut and patch structural elements in a manner that would change their load carrying capacity or load deflection ratio.

.13 Do not cut and patch operating elements, fire rated assemblies, or related components in a manner that would result in reducing their capacity to perform as intended or that would result in increased maintenance or decreased operational life or safety.

.14 Do not cut and patch construction exposed on the exterior or in occupied spaces in a manner that would, in the Consultant's opinion, reduce the building's aesthetic qualities or impact the building envelop performance. Do not cut and patch construction in a manner that would result in visual evidence of cutting and patching. Remove and replace construction cut and patched in a visually unsatisfactory manner.

.15 Replace, patch, and repair material and surfaces cut or damaged by methods and with materials in such a manner as not to void any warranties required or existing and to maintain original performance characteristics.

.16 Cut existing construction using methods least likely to damage elements retained or adjoining construction. Where possible, review proposed procedures with the original Installer; comply with the original Installer's recommendations.

.17 Patching: Patch construction by filling, repairing, refinishing, closing up and similar operations following performance of other work. Patch with durable seams that are as invisible as possible. Provide materials and comply with installation requirements specified in other Sections of these Specifications. Comply with specified tolerances.

.1 Inspection: Where feasible, inspect and test patch areas to demonstrate integrity of the installation.

.2 General: Patch, repair, replace, and/or refinish existing construction as necessary to refurbish damaged and nonconforming area of work.

.3 Exposed Finishes: Restore exposed finishes of patched areas and extend finish restoration into retained adjoining construction in a manner that will eliminate evidence of patching and refinishing.

.4 Floors and Walls: Where removal of walls or partitions extends from one finished area into another, patch and repair floor and wall surfaces in the new space to provide an even surface of uniform color and appearance. If necessary, remove existing floor and wall coverings and replace with new materials to achieve uniform colour and appearance.

.1 Where patching occurs in a smooth painted surface, extend final paint coat over entire unbroken surface area containing the patch, after the patched area has received primer and second coat.

.5 Patch, repair, replace, and/or refinish existing construction as necessary to refurbish damaged and nonconforming area of work.

.1 Ceilings: Patch, repair or rehang existing ceilings as necessary to provide an even plane surface of uniform appearance.

.2 Drywall: Patching and repair or resurfacing of existing gypsum wall surfaces is specified in Section "Gypsum Board Assemblies".

.3 Exterior Building Enclosure: Patch components in a manner that restores enclosure to a weathertight condition. Where interior partitions interface with exterior walls, gently remove partition end filler panels. Patch, mullions, walls surfaces, ceiling surfaces that may have been damaged during removal and repair and restore items to original condition.

.18 Administrative and procedural requirements for altering work in place to accommodate subsequent installations.

.1 Structural Elements: Obtain approval of the cutting and patching proposal before cutting and patching the following structural elements: Foundation construction, bearing and retaining walls, structural concrete, structural steel, lintels, stair systems, and miscellaneous structural metals.

.2 Operational Elements: Obtain approval of the cutting and patching proposal before cutting and patching the following operational elements: Primary operational systems and equipment, air or smoke barriers, fire-protection systems, mechanical systems piping and ducts, control systems, communication systems, conveying systems, electrical wiring systems, electronic security systems.

.3 Miscellaneous Elements: Obtain approval of the cutting and patching proposal before cutting and patching the following miscellaneous elements: Water, moisture, or vapour barriers, membranes and flashings, exterior windows, entrances, and storefronts, equipment supports, piping, ductwork, vessels, and equipment, and noise- and vibration-control elements and systems.

.4 Visual Requirements: If possible, retain original installer or fabricator to cut and patch exposed Work as follows: Processed concrete finishes, stone cladding, decorative metal, matched-veneer woodwork, roofing, firestopping, window system, carpeting, fluid-applied flooring, wall covering, and HVAC enclosure.

.19 No alterations by means of cutting, coring, drilling or otherwise to columns, floors, walls or roof of the structure will be permitted without the prior written permission of the Owner and may require the review of the base building structural engineer. Cutting and coring may not proceed without X-raying by a qualified contractor.

.20 Patch and repair all fireproofing damaged or removed in the performance of the work. Fire resistance rating to match existing.

.21 Make adjustments to location of openings as required to minimize cutting of rebar and completely avoid electrical conduit.

.1 X-rays shall be performed by a qualified technician, in a safe manner and in accordance with all applicable regulations governing this activity.

.2 Cut holes through slabs only.

.3 Do not cut holes through beams.

.4 Holes to be cut are maximum 200 mm (8 in.) diameter or smaller only.

.5 Maintain at minimum 100 mm (4 in.) clear from beam faces. Space at least 3 hole diameters on Centre.

.6 For holes that are required closer than 25% of slab span from the supporting beam face, use cover meter above the slab to clear slab top bars.

.7 For holes that are required within 50% of slab span, use cover meter underside of slab to clear slab bottom bars.

.22 Openings required for mechanical services for new construction shall be in accordance with Mechanical Sections. Apply for openings required in existing construction or where sleeves for mechanical services have been omitted in new construction in error.

.23 Include for cutting and patching for mechanical and electrical services for holes and openings with dimensions up to 200 mm (8 in.) in size and related patching.

.24 Employ a professional structural engineer registered in the Place of the Work, to design patching of opening larger than 200mm (8 in) requiring structural performance and to be responsible for determining sizes, spacing and loading of components in accordance with applicable codes and regulations. This structural Professional Engineer shall stamp and

sign the shop drawings and ensure that this Work is provided in accordance with this design.

.1 Conform with the requirements of CSA A23.1/A23.2 Concrete Materials and Methods of Concrete Construction/Test Methods and Standard Practices for Concrete.

.2 Provide materials to match existing adjacent.

.25 Cut openings no larger than required for services.

.26 Patch openings after services have been installed to match surrounding finishes.

1.39 **01 73 30 DEFICIENCY RECTIFICATION**

.1 After Substantial Performance of the Work, rectify all deficiencies within 2 weeks of receipt of deficiency list.

1.40 **01 74 13 PROGRESS CLEANING**

.1 Provide all necessary and required means for both the removal and disposal of all rubbish, debris, demolished fixtures and fittings and all other items not scheduled to remain at the Place of the Work or in the tenant's premises, resulting from the operations of this Work.

.2 Provide all necessary and required garbage bins and garbage chutes.

.3 Remove construction debris and waste material on a continuous basis from the work area. Do not damage or overload floors.

.4 Clean the Place of the Work daily and maintain clean and orderly to the satisfaction of the Owner.

.5 Keep access routes clear at the Place of the Work.

.6 Maintain access to exits from Place of the Work and adjacent occupied areas.

.7 Notify the Consultant of the need for cleaning caused by Owner or separate contractors if applicable.

1.41 **01 74 23 FINAL CLEANING**

.1 In addition to regular site cleaning and debris removal during construction, perform a final site cleaning at the end of construction, before final acceptance and move in. Final cleaning shall include but not be limited to:

.1 Clean and polish all glass and mirrors.

.2 Remove dirt, grease, stains, labels etc. from all surfaces.

.3 Seal, wax and polish surfaces that are specified as such.

.4 Repair and touch up damaged surfaces, to finish specified.

.5 Vacuum all building interiors affected by construction.

.6 Replace HVAC filters if units were operating during construction.

.7 Vacuum all convector and similar perimeter HVAC enclosures.

1.42 **01 77 00 CLOSEOUT PROCEDURES**

.1 In Ontario, comply with OAA-OGCA Document No. 100-2026 dated June 15, 2026 "Recommended Procedures Concerning Substantial Performance, Ready-For-Takeover and Completion Take-Over for Construction Projects"

.2 Should more than one (1) deficiency review or more than one (1) subsequent review be necessary because of untimely or incomplete Work by the Contractor, the additional time and project reimbursables incurred by the Consultant shall be at the Contractor's expense.

.3 Comply with lien legislation for the Place of the Work for procedures concerning Substantial performance of construction Contracts and completion take-over of projects.

.4 Schedule and pay for the cost of publication of Substantial Performance of the Work as required by the applicable Lien legislation act of the Place of Work.

.5 Co-ordinate with other members of the team in making a complete inspection of the Project at the end of one year after completion and be responsible for ensuring that all Work requiring repair or replacement is carried out by the Subcontractor concerned.

.6 Include the completed "Summary List of Equipment and Warranties" which is appended to this section as part of the documents supporting the application for Substantial Performance of the Work. The application will be considered incomplete if this document is missing.

SUMMARY LIST OF EQUIPMENT AND WARRANTIES - TD Submit this document with the Application for Substantial Performance and in the Project Manuals.		
Item No.	**Equipment Type Model No. and Warranty Limitations**	**Length of Warranty**
1		
2		
3		

1.43 **01 77 20 FINAL PAYMENT APPLICATION**

.1 Prior to application for final payment, remove from the Place of the Work remaining surplus Products, Construction Equipment, and Temporary Work.

.2 Perform final cleaning and waste removal necessitated by the Contractor's work performed after Ready-For-Takeover, as specified in Section 01 74 23 – Final Cleaning.

.3 Submit final invoicing within 60 days of Substantial Performance of the Work. Allow a minimum of 14 days for Consultant review.

.4 Application for final payment will not be considered valid until complete and accurate record documents submitted to the Consultant.

1.44 **01 78 39 PROJECT RECORD DOCUMENTS**

.1 On a set of documents issued for construction, while Work is in progress, accurately and neatly record deviations caused by conditions at the Place of the Work and changes ordered by the Owner through the Consultant.

.2 Install Panel directories, nameplates, valve tags, valve charts, etc. before the date of Substantial Performance of the Work.

.3 At least 10 days prior to final application for payment, but not later than 45 days after Substantial Performance of the Work:

.1 Submit Project Record Manual consisting of as-built drawings, permit and operation and maintenance data. Data to contain operational information on equipment, cleaning and lubrication schedules, filters, overhaul and adjustment schedules and similar maintenance information. Collect reviewed submittals and assemble documents executed by Subcontractors, suppliers, and manufacturers. Provide warranties fully executed and notarized. Include permit drawings and specifications approved by the building department.

.2 Submit, as part of the Project Record Manual, electronic drawing files of final as-built mechanical, electrical and communications drawings. Electronic drawings files shall be in AutoCAD release 2017 format and in PDF format.

.1 Purge all drawings and bind all X-refs to create a single file for each drawing.

.2 Name drawing files using the following naming convention: project/building name, floor number, date yy-mm-dd, trade, drawing number.

.1 E.G. - AcmeCompany 30 130124 MECH M-01.dwg, 750LAW 02 130124 ELEC E-03.dwg

.2 E.G. - AcmeCompany 30 16-03-28 MECH M-01.dwg, 750LAW 02 16-03-28 ELEC E-03.dwg

.3 Upon receipt of signed Electronic Data Transfer agreements and payment of any stipulated fees, the Consultants shall provide AutoCAD format electronic files of the drawings to the Contractor for use in the preparation of as-built drawings.

.3 Compile contents in PDF form, named so as to be readily identifiable, rotated to be right-reading, and organized into folders corresponding to headings in Table

RM-1, parallel to specifications Sections. Compile all required documentation into a single complete package. Do not submit partial or incomplete Project Record Documentation to Consultant. Submit complete Project Record Manual via weblink or as otherwise directed by the Owner or Consultant. Distribution List to include Owner, Consultant and any others as directed by the Owner.

.4 Submit one set of completed mechanical, electrical and communications as-builts to engineers for review and acceptance prior to final submission of the Project Record Manual. Engineers shall return reviewed as-builts to Contractor with a letter of acceptance or if not acceptable a request for resubmission. Include the letter of acceptance in the Project Record Manual.

.5 The Contract shall not be certified as complete or be deemed complete until record documents are received by Consultant.

Table RM-1
The Project Record Manual described in 3.1 shall include the following items as applicable to this Project:

1	**Warranty from G.C.**
1.0	Summary List of Equipment and Warranties
1.1	Warranties for 1 year from substantial. (sub trade and G.C warranties)
1.2	Extended (longer than 1 year) warranties if applicable (sub trade and G.C warranties)
2	**Electronic Files of Drawing Sheets and Shop Drawings - approved by M&E**
2.1	Mechanical As-builts (HVAC, plumbing/sprinklers)
2.2	Electrical As-builts
2.3	Communications As-builts
2.4	Electrical shop drawings for special (non-base building) lighting
3	**Inspection and Testing Reports**
3.1	Electrical/Hydro Certificate of Inspection
3.2	Fire alarm verification
3.3	Electromagnetic lock verification
3.4	Sprinkler verification
3.5	Air balancing reports
3.6	Balancing valves test reports
3.7	Data cabling test reports
3.8	Nordx/CDT certificate
3.9	Sound Masking test and verification reports
4	**Consultant Review (computer file is acceptable)**
4.1	Letter/Memo from Electrical consultant confirming that as-built documents are acceptable.
4.2	Letter/Memo from Mechanical consultant confirming that as-built documents are acceptable.
4.3	Letter/Memo from Communications consultant confirming that as-built documents are acceptable.
5	**Operations manuals**
5.1	Operation and Maintenance Manuals for equipment provided as part of the Work.
6	**Safety Data Sheets (SDS)**
6.1	Copy of SDSs for products used in the Work

7	**Permit**
7.1	Permit drawings and specifications approved by building department including copy of the building permit
7.2	Copy of occupancy permit or equivalent
8	**Project Directory**
8.1	List of trades or subcontractors with contact names and phone numbers
9	**Certificates**
9.1	Carpet manufacturer's certificate for recycled carpet and instructions for recycling carpet in the future.
9.2	Resilient flooring manufacturer's certificate for recycled resilient flooring and instructions for recycling resilient flooring in the future.
10	**Extra Stock and Spare Parts**
10.1	Include list of extra stock and spare parts and quantities of each. Label extra stock containers, boxes, or containers with project material/finish code, manufacturer, colour. Provide to the Owner, the following extra stock and spare parts: • Interior architectural woodwork cabinet hardware: Provide 2 percent of each cabinet pull but not less than 2 extra pulls. • Carpet tile: Provide 2 percent of each carpet tile product. • Tile: Provide 2 percent of each tile product including tile base product • Acoustical ceiling tile: Provide 2 percent of each acoustical tile product • Resilient flooring: Provide 2 percent of each resilient floor product • Resilient base: Provide 2 percent of each resilient base product • Fixed sound-absorptive panels: Provide 2 percent of each type of fabric. • Paint: Provide 1 gallon (3.78 litre) containers extra stock of each paint colour and gloss. If requested by Consultant, retain and prepare unused material for storage by Owner in addition to extra stock quantities specified. Deliver unused installation to Owner's storage space as directed. Coordinate delivery location with Owner with may be different than project address.

1.45 **01 81 13 SUSTAINABLE DESIGN REQUIREMENTS**

.1 All sealants, adhesives, coatings and paints to be field applied within the exterior weather barrier shall comply with the following VOC limits unless otherwise specified. Report any non-compliant products to the Consultant in advance of anticipated usage so as to cause no delay to the Work.

.1 Paints and Coatings:

.1 Ensure all products used comply with the "VOC Concentration Limits for Architectural Coatings Regulation" enacted pursuant to the "Canadian Environmental Protection Act, 1999".

.2 Comply with 40 CFR 59, Subpart D (EPA Method 24) as recommended by the manufacturer.

.3 Flat Paints and Coatings: 50 g/L.

.4 Nonflat Paints and Coatings: 50 g/L.

.5 Dry-Fog Coatings: 150 g/L.

.6 Primers, Sealers, and Undercoaters: 100 g/L.

.7 Rust-Preventive Coatings: 100 g/L.

.8 Zinc-Rich Industrial Maintenance Primers: 100 g/L.

.9 Pretreatment Wash Primers: 420 g/L.

.10 Clear Wood Finishes, Varnishes: 275 g/L.

.11 Clear Wood Finishes, Lacquers: 275 g/L.

.12 Floor Coatings: 50 g/L.

.13 Shellacs, Clear: 730 g/L.

.14 Shellacs, Pigmented: 550 g/L.

.15 Stains: 100 g/L.

.2 Adhesives and Sealants:

.1 Wood Glues: 30 g/L.

.2 Metal-to-Metal Adhesives: 30 g/L.

.3 Adhesives for Porous Materials (Except Wood): 50 g/L.

.4 Subfloor Adhesives: 50 g/L.

.5 Plastic Foam Adhesives: 50 g/L.

.6 Carpet Adhesives: 50 g/L.

.7 Carpet Pad Adhesives: 50 g/L.

.8 VCT Tile Adhesives: 50 g/L.

.9 Cove Base Adhesives: 50 g/L.

.10 Gypsum Board and Panel Adhesives: 50 g/L.

.11 Rubber Floor Adhesives: 60 g/L.

.12 Ceramic Tile Adhesives: 65 g/L.

.13 Multipurpose Construction Adhesives: 70 g/L.

.14 Fiberglass Adhesives: 80 g/L.

.15 Contact Adhesives: 80 g/L.

.16 Structural Glazing Adhesives: 100 g/L.

.17 Wood Flooring Adhesives: 100 g/L.

.18 ABS Welding Compounds: 325 g/L.

.19 CPVC Welding Compounds: 490 g/L.

.20 PVC Welding Compounds: 510 g/L.

.21 Adhesive Primer for Plastic: 550 g/L.

.22 Aerosol Adhesive, General-Purpose Mist Spray: 65 percent by weight.

.23 Aerosol Adhesive, General-Purpose Web Spray: 55 percent by weight.

.24 Special-Purpose Aerosol Adhesives (All Types): 70 percent by weight.

.25 Other Adhesives: 250 g/L.

.26 Architectural Sealants: 250 g/L.

.27 Other Sealants: 420 g/L.

.28 Sealant Primers for Nonporous Substrates: 250 g/L.

.29 Sealant Primers for Porous Substrates: 775 g/L.

.30 Other Sealant Primers: 750 g/L.

Division 02 EXISTING CONDITIONS

1.46 **02 41 20 SELECTIVE DEMOLITION**

.1 Submittals:

.1 Submit for review of the Building Owner's Representative and approval of the Owner, a schedule of selective demolition activities indicating a detailed sequence of selective demolition and removal work, with the commencement, the order, and the completion are uninterrupted. In addition, indicate on the schedule the following items:

.1 Proposed dates for interruption of utility services. Indicate how long utility services will be interrupted.

.2 Coordination for shutoff, capping, and continuation of utility services

.3 Use of elevator and stairs

.4 Locations of temporary partitions and means of egress.

.5 Proposed dust-control and noise-control measures.

.6 Means of protection for items to remain and items in path of waste removal from building.

.7 Coordination of Building Owner's continuing occupancy of portions of existing building and of Owner's partial occupancy of completed Work.

.8 Shop drawings indicating extent of demolition, including alterations to structure such as coring or demolition of concrete slab, or alterations impacting life safety, egress, or fire protection. Review and finalize selective demolition scope and schedule with Consultant.

.2 Submit qualifications for Selective Demolition Firm.

.3 Inventory: Submit inventory list of items to be removed and salvaged, and items to be removed by Owner.

.4 Predemolition Photographs: Show existing conditions of adjoining construction and site improvements, including finish surfaces, which might be misconstrued as damage caused by selective demolition operations. Submit before Work begins.

.2 Quality Assurance:

.1 Selective Demolition Firm Qualifications: Engage an experienced firm that has successfully completed selective demolition Work similar to that indicated for this Project for a period of not less than 5 years.

.2 Regulatory Requirements: Comply with applicable federal, provincial municipal laws, codes, and regulations pertaining to the following:

.1 Occupational Health and Safety Act [Construction Act] of the Place of Work.

.2 Comply with hauling and disposal regulations of authorities having jurisdiction.

.3 Protection of the Public: The protection of the public during alterations, including but not limited to, requirements for safety of operations, noise control, removal and disposal of waste materials, control of dust, dirt, pollutants, flammable materials, explosive materials, corrosive substances, protection against fire.

.4 Demolish, salvage, re-use and/or dispose of products as indicated on Drawings.

.3 Comply with CSA S350.

.4 Where demolition of partitions is indicated, demolish all baffles directly above the partitions in the ceiling plenum.

.5 Where demolition of suspended ceilings is indicated in areas which are to remain exposed to the structure above, remove all existing hangers rods, metal framing and bracing.

.6 Minimize, to the greatest extent possible, damage to adjacent surfaces during demolition.

.7 Protect own Work, the Work of others, and new, existing and adjacent structures from damage during demolition. Protection shall include but shall not be limited to windows, floors, ceiling tiles, washrooms, elevators, doors, electrical and air conditioning equipment and convector enclosures.

.8 Demolished materials become the property of the Contractor, unless noted otherwise.

.9 Where indicated in the Contract Documents that demolished items are the property of the Owner or tenant, but to be removed off site, the Contractor shall be responsible to load on Owner's or tenant’s carrier. Coordinate with Owner.

.10 Existing materials that remain the property of the Owner or tenant and that are to be reused in the Work shall be carefully removed and stored by the Contractor and protected in an appropriate manner.

.11 Demolished materials and debris must be removed on a continuous basis from the Work area. Floors shall not be overloaded or damaged.

.12 Items including but not limited to doors and frames that are scheduled for re-use shall be tagged and stored in sets. To whatever extent possible re-install products in their original sets.

.13 Provide all necessary and required means for both the removal and disposal of all rubbish, debris, demolished fixtures and fittings and all other items not scheduled to remain at the Place of the Work, resulting from the operations of this Work. Provide all necessary and required garbage bins and garbage chutes.

.15 Filling of Minor Openings Resulting From Removal of Services:

.1 Gypsum Board on metal stud: Trim existing opening clean and square. Install metal studs of same thickness as existing at each end of opening, overlapping one half the stud face behind the existing gypsum board. Install metal studs between end studs at centers not to exceed 16 inches (405 mm) on centre. Extend each end of all studs 4 inches (100 mm) beyond the existing opening. Screw through existing gypsum to secure new studs. Fill opening with gypsum board of same thickness as existing. Tape, fill and sand to accept new finishes.

.2 Concrete on metal deck: Remove all loose material and clean perimeter of existing openings. Fasten a minimum 16 gauge (1.5 mm) steel plate to the underside of the metal deck and extend 4 inches (100 mm) beyond the existing opening. Plate shall be secured in a manner sufficient to support the floor loading on the area of the infill. Fill voids at deck flutes to prevent passage of poured concrete infill. Fill with poured concrete, and finish smooth to accept new floor finishes.

.16 Slab-On-Grade Trenching: Saw cut concrete floor and remove materials from the Place of the Work. Do not jack hammer floor.

.18 Fireproofing product patching:

.1 Universal Fire Patch: For patching damaged fireproofing and fire rated construction, as required to maintain fire rating of enclosed construction, compatible with fiber and cementitious fireproofing applications, compliant with CAN/ULC-S101 for up to 2 hour fire rating.

.1 Product: "Universal Fireproofing Patch (UFP)" manufactured by the Vellrath Group; with the following minimum performance characteristics:

.1 Colour/texture: Off white to beige, textured.

.2 Density tested to ASTM E605/E605M: 38.52 pcf.

.3 Adhesion/cohesion tested to ASTM E736/E736M: 2745 psf.

.4 Surface burning tested to CAN/ULC-S102:

.1 Flame Spread Value: 0.

.2 Smoke Developed Value: 0.

.5 Fire resistivity tested to ASTM E119: 2 hrs at 1-1/16-inch-thick application.

1.47 **02 44 00 STRUCTURAL ALTERATION**

.1 Provide labour, materials, products, equipment and services to complete the structural alteration work including but not limited to the following: Verification of field conditions and dimensions; Design of shoring and needling and associated bracing along with necessary foundations thereto as required to safely install new structural members; Temporary shoring, needling and associated bracing and where necessary jacking of existing work and removal thereof as required to safely install new structural members.

.2 Drawings governing alterations to existing structural work were prepared using the following assumptions: Existing building is built in accordance with the original Contract Documents, significant details of which have been reproduced on the drawings;

Workmanship and materials employed on the existing buildings were of good quality and the building has not deteriorated significantly; Bearing walls, structural steel, structural concrete is reasonably true and plumb.

.3 Visit and examine the site and note all characteristics and irregularities affecting work of this Section. The Owner shall make no allowance for conditions that where apparent at time of Bid submission. Report in writing all findings to the Consultant.

.4 Before proceeding with alterations to structural members, verify that the assumptions, described above are correct. If the assumptions described above not be correct, notify the Consultant immediately. Consultant shall determine revisions necessary to the Work as shown. Provide the necessary assistance to enable the Consultant to determine the extent of the revisions necessary.

.5 Investigate the existing building to determine actual field conditions, take field dimensions, ascertain loads and forces to be supported or resisted, probe structural bearing members to determine soundness and perform other inspection necessary to carry out design of shoring, needling, bracing and the like, to schedule the sequence of operations, and prepare shop drawings and details.

.6 Conform to requirements of all authorities having jurisdiction.

.7 Contractor shall be responsible for all damage arising out of the work of this Section, and for all damage caused by the work of this Section and for all damage to adjacent private and/or public properties and shall make good all damages caused by the work this Section to the satisfaction of the Consultant.

.8 Review of shoring, bracing and needling design shop drawings shall in no way relieve the Contractor of the responsibility for carrying out the work of this Section in a manner which ensures the complete safety of the existing building, persons and adjacent properties, and also ensures that no damages occurs thereto during the any period of the work of this Section.

.9 Erection of structural steel shall conform to requirements of CSA S16 and CSA S136.

.10 Work of this Section shall be executed by a firm thoroughly conversant with laws, by-laws and regulations which govern, and capable of workmanship of best grade of modern shop and field practice known to recognized manufacturer's specializing in work of this Section.

.11 Work of this Section shall be executed by workers especially trained and experienced in this type of work. Have a full time, senior, qualified representative at the site to direct the work of this Section.

.12 Professional engineer registered to design structures in the place of Work shall design of all shoring, needling, bracing, scaffolding, the sequence of their installation and the sequence of the work and shall also be employed to fully supervise their installation and removal.

.13 Design shoring, bracing, needling, scaffolding, and the like, along with the necessary foundations in accordance with the requirements of the Building Code of the Place of the Work, so that loads applied to them will be safely carried. Superimposed live loads, construction loads shall be taken into account and the lateral stability of the elements supported and the shoring and needling shall be ensured.

.14 Prepare design of shoring, and the like, in co-operation with other trades so that new work may be installed as required.

.15 Prevent movement or settlement of the existing building, adjacent buildings and/or properties. Provide and place bracing or shoring and be responsible for safety and support of such work. Be liable for any such movement or settlement, and any damage or injury caused.

.16 Cease operations and notify Consultant if safety of any adjacent work or structure appears to be endangered. Take all precautions to support the structure. Do not resume operations until reviewed with the Consultant.

.17 Prepare structural alteration schedule in conjunction with overall project schedule, and outline proposed methods in writing to the Consultant. Obtain approval from the Consultant, before commencing work of this Section.

.18 Products used shall conform to the following unless otherwise noted: Concrete, grouting, formwork and reinforcing steel to CSA A23.1/A23.2; Structural steel to CAN/CSA-G40.20 /G40.21, Grade 300W; Steel deck to specified requirements of ASTM A653/A653M, Grade "A", minimum core thickness of 0.030 inches (0.76 mm) nominal with profile as indicated on drawings, with minimum yield point of 33,000 psi.(227 MPa), having minimum coating designation "ZF075 Wipe Coat Finish"; Structural timber framing to CSA O86.

.19 Proceed with structural alterations to any portion of the existing building only after approval of the Consultant has been obtained, and after weather tight and dustproof screens have been erected to provide through protection to the adjoining areas and rooms.

.20 Coordinate the work of the various Sections and trades, taking into consideration the existing installations to assure the best arrangement of pipes, conduits, ducts and mechanical, electrical and other equipment and items, in the available space. Under no circumstances will any extra payment be allowed due to failure to coordinate the work of this Section.

.21 Ensure that new materials used to alter the existing work are compatible with the existing work.

.22 Exercise caution in dismantling, disconnecting and/or altering structural components of the Work adjacent to existing work designated to remain.

.23 Carry out structural alterations in an orderly and careful manner, and so as to cause as little inconvenience to the adjacent occupied building areas as possible.

.24 Locate guard rails around open areas and shafts to protect workers. Post clearly visible warning signs.

.25 During the performance of the work of this Section, adequately protect Work completed and in progress, and existing Work to remain, such as floors, finishes, trim, etc., as completely as possible to minimize the replacement of damaged work by each subcontractor and trade. Work damaged or defaced due to failure to provide adequate protection shall be repaired, or removed and replaced as directed by the Consultant.

.26 Lower waste materials in a controlled manner. Do not drop or throw materials from heights. At end of each day's work, leave project site in a safe condition so that no part is in danger of toppling or falling.

Division 03 CONCRETE

1.48 **03 35 00 CONCRETE FLOOR FINISHING**

.1 Provide a complete floor finish acceptable to the Owner and suitable for applied toppings.

.2 Installer to have a minimum five (5) years' experience.

.3 Level of acceptable finish shall be a smooth float finish or as required by applied toppings. Do not overwork the concrete surface.

.4 Make floor level unless noted otherwise. Feather and blend new floor finish neatly into adjoining concrete floor levels.

.5 Make floor level to F_F30 when measured in accordance with ASTM E1155 unless otherwise specified or indicated. Feather and blend new floor finish neatly into adjoining concrete floor levels.

.1 F_F 35 and F_L 25, for suspended slabs with minimum local values of F_F 24 and 17; F_L for slabs-on-grade.

.2 Where an under-carpet power distribution system such as Steelcase Thread is being installed, in addition to achieving FF30, the floor shall also meet the following requirements:

.1 No high points or irregularities exceeding 1/8 inch (3.0 mm) in height along the installation path;

.2 No changes in elevation exceeding 1/8 inch in 12 inches (3.0 mm in 300 mm);

.3 No changes in elevation exceeding 1/16 inch within 9 inches of a connector location;

.4 Holes or depressions equal to or larger than 1 inch diameter (25.4 mm) to be filled in;

.5 No loose debris along installation path.

.6 The finish shall be wet cured.

.7 Protect completed work from damage and foot traffic until the finish is cured sufficient for foot traffic.

.8 After concrete has cured, examine concrete floor surfaces and repair cracks. Route cracks out with mechanical router to minimum depth of 13 mm. Then clean and fill cracks with caulking specially made for concrete floor joints.

.9 Liquid floor sealer/hardener/densifier treatment for use on concrete floors where indicated on drawings.

.10 Products of the following manufacturers are acceptable subject to conformance to the requirements of the Drawings, Schedules and specifications: CPD Construction Products; www.cpd.com, Euclid Admixture Canada Inc.; www.euclidchemical.com, L&M Construction Chemicals, Inc., brand of Laticrete International, Inc.; www.lmcc.com, Sika Canada Inc.; www.sikacanada.com, Tremco Ltd.; www.tremcosealants.com , W.R. Meadows of Canada; www.wrmeadows.com; MAPEI Corporation; www.mapei.com.

.11 Supply liquid curing/sealing compound from same manufacturer which is supplying shake hardener.

.12 Penetrating liquid floor sealer/hardener/densifier treatment for use where the concrete will be left exposed:

.1 Clear, chemically reactive, waterborne solution of inorganic calcium silicate or lithium silicate materials and proprietary components; odorless; that penetrates, hardens, and densifies concrete surfaces. Finish treatment shall exceed ADA recommendations for 0.50 SCOF or greater on wet and dry surfaces tested in accordance ASTM F 1637.

.2 Acceptable products and manufacturers:

.1 "Euco Diamond Hard Liquid Densifier and Sealer" by Euclid Admixture Canada Inc.

.2 "Ultra Liquid-Hard Concrete Densifier and Chemical Hardener" by W.R. Meadows of Canada.

.3 "Mapecrete Hard LI" by Mapei.

.13 Liquid floor surface sealer treatment for use where concrete will be covered by a floor finish:

.1 Clear, chemically reactive, waterborne acrylic solution; odorless; that seals and dustproofs concrete surfaces complying with ASTM C1315 Type 1, Class A

.2 Acceptable products and manufacturers:

.1 "Vocomp-25" by W. R. Meadows of Canada; www.wrmeadows.com.

.2 Or equivalent product and manufacturer acceptable to the Consultant.

.14 Remove existing floor finish and adhesive completely. Prepare surfaces as recommended, in accordance with manufacturer's written recommendations.

.15 Remove curing compounds, sealers, oil, dirt, laitance, and other contaminants and complete surface repairs.

.16 Mix products and apply at rate of application in accordance with product manufacturer's written installation instructions

.17 Use protective methods and materials, including temporary covering, recommended in writing by the Product manufacturer.

1.49 **03 35 43 CONCRETE FLOOR POLISHING – INCLUDING LEVELLING OF EXISTING SLABS**

.1 Provide a complete concrete finishing system as scheduled in Section 09 06 00 Legend of Products and Legend of Materials. No substitutions will be accepted.

.2 Installer to be licensed, qualified or approved by the concrete finishing system manufacturer with adequate staff trained to install products according to the specified requirements.

.3 Finish the concrete floors in accordance with product manufacturer's written installation instructions

.4 Schedule the finishing with the installer to ensure adequate time before, during and after the finishing, to accommodate the project completion. Account for work of other trades and the installation of Owners furniture, fittings and equipment.

.5 Determine with the installer the required cure times for all levelling and patching.

.6 Examine substrate, along with the installer, for conditions affecting the performance of the finish. Do not proceed with work until all unsatisfactory conditions are corrected.

.7 Maintain all substrate joints though the concrete topping, including expansion joints, isolation joints and controls joints (saw cuts)

.8 Conduct an on-site pre-installation conference with the installer and product manufacturer's representative prior to performing any slab preparation, priming, topping or finishing. Review installation requirements.

.9 Meet with installer prior to performing any concrete floor levelling to determine suitable materials and methods for the concrete floor levelling Level the floors to F_F30 when measured in accordance with ASTM E1155M to the extent possible in a manner to blend with the existing slab, while providing a suitable surface to receive the concrete finishing system.

.10 Where an under-carpet power distribution system such as Steelcase Thread is being installed, in addition to achieving F_F30, the floor shall also meet the following requirements:

.1 No high points or irregularities exceeding 1/8 inch (3.0 mm) in height along the installation path;

.2 No changes in elevation exceeding 1/8 inch in 12 inches (3.0 mm in 300 mm);

.3 No changes in elevation exceeding 1/16 inch within 9 inches of a connector location;

.4 Holes or depressions equal to or larger than 1 inch diameter (25.4 mm) to be filled in;

.5 No loose debris along installation path.

.11 Equipment used for mechanical polishing process to be in accordance with manufacturer's recommendations. Attach all grinding and polishing equipment to a dust collector.

.12 Provide mockups as indicated in Section 01 43 39 MOCKUPS.

.13 Provide reports confirming compliance with the manufacture's specifications.

.14 Protect completed Work from damage.

1.50 **03 53 23 SELF LEVELLING CONCRETE TOPPING WITH TOPCOAT**

.1 Scope:

.1 Application of moisture control system.

.2 Application of self-levelling concrete topping.

.3 Application of epoxy topcoat floor finish.

.2 Comply with the requirements of CSA A23.1/A23.2, ASTM C150/C150M as related to concrete topping.

.3 Coordinate the work of this trade with the installation of concrete floor slab.

.4 Finish floor to F_F30 when measured in accordance with ASTM E1155M.

.5 Where an under-carpet power distribution system such as Steelcase Thread is being installed, in addition to achieving F_F30, the floor shall also meet the following requirements:

.1 No high points or irregularities exceeding 1/8 inch (3.0 mm) in height along the installation path;

.2 No changes in elevation exceeding 1/8 inch in 12 inches (3.0 mm in 300 mm);

.3 No changes in elevation exceeding 1/16 inch within 9 inches of a connector location;

.4 Holes or depressions equal to or larger than 1 inch diameter (25.4 mm) to be filled in;

.5 No loose debris along installation path.

.6 Ensure that concrete slabs contain no admixtures, release agents, or curing agents which would be incompatible with self-levelling cementitious topping materials.

.7 Prepare, clean, fill and prime existing concrete and other surfaces according to manufacturer's written instructions. Obtain minimum ICRI surface profile of 3 (CSP 3).

.8 Treat substrate cracks according to manufacturer's written instructions to prevent cracks from telegraphing (reflecting) through topping and to prevent topping spanning moving cracks.

.9 Moisture Control System:

.1 Moisture Control Membrane:

.1 Single-coat, fast-curing, 100% solids epoxy moisture management system.

.2 Product: Ardex MC RAPID One-Coat Moisture Control System by Ardex Engineered Cements or equivalent.

.2 Sand for Broadcasting: Clean, free of organic and deleterious matter, with 98.5% passing sieve size #30 or #35.

.3 Primer: Product from topping manufacturer recommended in writing for substrate, conditions, and application indicated.

.1 Product: Ardex EP 2000 Substrate Preparation Epoxy by Ardex Engineered Cements.

.10 Concrete: Topping:

.1 High strength, non-shrink, self-levelling hydraulic-cement based topping having minimum of 40 MPa at twenty-eight (28) days when tested according to ASTM C109/C109M.

.1 Minimum application thickness of 6 mm to 50 mm

.2 Cement Binder: Portland cement complying with ASTM C150/C150M.

.3 Aggregate: Well-graded, crushed rock or washed gravel, 3 mm to 6 mm; or coarse sand as recommended by underlayment manufacturer, conforming to CSA A23.1/A23.2.

.1 Provide aggregate when recommended in writing by topping manufacturer for topping thickness required.

.2 Product: Ardex SD-T Self-drying, Self-Levelling Concrete Topping by Ardex Engineered Cements.

.11 Topcoat:

.1 100% solids, 0 VOC self-levelling, two-component thermosetting high-build epoxy coating.

.2 Sand for broadcasting in topcoat: Clean, free of organic and deleterious matter, with 98.5% passing sieve size #55.

.3 Mix according to manufacturer's directions.

.4 Product: NPC EPOXAL 100 HP Series 3000 by Niagara Protective Coatings.

.12 Moisture Control System Application: Where use of moisture control system is indicated, apply moisture control system in a single 0.25 mm thick coat if an intact underslab vapour retarder is present. Apply moisture control system 0.36 mm thick if an intact underslab vapour retarder is not confirmed.

.13 Concrete Topping Application:

.1 For topping installations greater than 6 mm, or if the moisture control system was not worked into the surface sufficiently enough to prevent pinholes, apply another coat of the moisture control system with a sand broadcast according to manufacturer's instructions.

.2 Primer: Apply primer where moisture control system is not indicated.

.3 Mix primer according to manufacturer's instructions.

.4 Apply primer over prepared substrate at manufacturer's recommended spreading rate followed by a broadcast of fine sand.

.5 Apply topping to produce uniform, level surface within ± 1/8 inch (3 mm) in 10’-0” (3 m) to ACI 117 with straightedge to CSA A23.1/A23.2.

.6 Cure topping according to manufacturer's written instructions. Prevent contamination during application and curing processes.

.7 Do not install floor coverings or drip pan over topping until after time period recommended in writing by topping manufacturer.

.8 Remove and replace topping areas that evidence lack of bond with substrate, including areas that emit a "hollow" sound when tapped.

.14 Topcoat:

.1 Ensure minimum floor temperature exceeds 16 C.

.2 Apply first top coat to produce uniform even coat 0.13 mm to 0.18 mm thick. Allow to cure. Apply second top coat to produce uniform even coat 0.25 mm to 0.36 mm thick.

.3 Where a textured finish is noted, apply final top coat to produce uniform even coat 0.13 mm to 0.15 mm thick and broadcast graded silica sand #55 to create a medium non-slip texture. Back roll the coating immediately to encapsulate the sand. Allow to cure.

.4 Cure according to manufacturer's written instructions. Prevent contamination during application and curing processes.

Division 05 METALS

1.51 **05 41 00 STRUCTURAL STUD FRAMING (INTERIOR PARTITIONS)**

.1 Load bearing steel stud framing system including wall studs subjected to axial loads, steel bridging, top and bottom tracks, head, sill and jamb members for wall openings, studs, bridging and track connections, and top and bottom connections to structure complete with details to accommodate structure deflections

.2 Comply CAN/CSA S136.

.3 Employ a Professional Engineer registered in the Province/Territory of the Place of the Work, to design components of the work of this Section requiring structural performance and to be responsible for determining sizes, gauges, spacing, bridging, fasteners, deflection details and framed opening components in accordance with applicable codes and regulations.

.4 Design the work of this Section to withstand, without permanent deformation and without any detrimental effects on appearance and performance, the effects of all positive and negative axial loads and lateral loads in accordance with the requirements of the Building Code of the Place of the Work.

.1 Maximum allowable deflection of L/360 except provide L/720 of the span where large format tile, stone or other heavy finishes are applied to wall and a minimum positive and negative pressure of 5 lbf/ ft² (239 Pa).

.5 Anchor top and bottom track to structure at a maximum spacing of 815 mm. Closer spacings may be required to satisfy structural design requirements.

.6 Design the load bearing steel stud framing system to support loads and superimposed loads transferred from supported assemblies and include for design of support and attachment components between other assemblies and load bearing steel stud framing system. Responsibility for design of loads transferred from other components is part of work of this Section.

.7 Any inspection and testing required because of an error by the Subcontractor or due to departure from the Contract Documents shall be paid for by the Subcontractor.

.8 Load bearing steel studs: Unless otherwise indicated on the Drawings, 100 mm, 150 mm and 200 mm wide as required, minimum 1.21 mm thick, channel type roll formed metal studs of corrosion resistant, galvanized sheet steel. Galvanized sheet steel conforming to ASTM A653/A653M, Grade A, having Z275 zinc coating designation and 228 MPa (33 ksi) minimum yield strength.

.9 Top and bottom tracks: Roll formed type top and bottom tracks formed to channel shape, having same width as the load bearing steel studs, with tight fit and solid web, of minimum gauge to meet design requirements, but no less than gauge of load bearing steel studs, of corrosion resistant, galvanized sheet steel. Top tracks and bottom tracks shall be formed from single piece. Galvanized sheet steel shall conform to ASTM A653/A653M, Grade A, having Z275 zinc coating designation and 228 MPa (33 ksi) minimum yield strength.

.10 Fasteners: Self-drilling, self-tapping type screws which are hot dip galvanized to conform to ASTM A153/A153M-16, Class B3.

.11 Drilled concrete expansion anchor fasteners: AISI Type 304 stainless steel drilled concrete expansion anchor type fasteners with expandable collar not requiring oversized holes. Stainless steel shall conform to ASTM A276/A276M.

.12 Drilled masonry expansion anchor fasteners: AISI Type 304 stainless steel drilled masonry expansion anchor type fasteners with expandable collar not requiring oversized holes. Stainless steel shall conform to ASTM A276/A276M.

.13 Steel bolts: High strength type steel bolts to suit applications and conforms to ASTM A325, or ASTM A307 as required.

.14 Acoustical Insulation: Where indicated, provide acoustic insulation to fill the full height of stud cavities. Thickness to suit stud sizes. Fit neatly around conduit, electrical boxes and other obstructions. Refer to 09 21 16 - Gypsum Board Assemblies for insulation products.

1.52 **05 50 00 METAL FABRICATIONS**

.1 Employ a professional structural engineer registered in the Place of the Work, to design components of the Work of this Section requiring structural performance and to be responsible for determining sizes, spacing and loading of components in accordance with applicable codes and regulations. This structural Professional Engineer shall stamp and sign the shop drawings and ensure that this Work is provided in accordance with this design.

.1 Submit shop drawings work of this Section sealed by a structural engineer licensed in the location of the Place of the Work showing among other things, pre-punching of support members, attachments to other construction, dimensions, locations, weights, operating clearances, and construction tolerances.

.2 Quality Standard:

.1 Provide quality of workmanship Class 1 for all fabrications exposed to view:

.1 Finish exposed surfaces smooth without pits, and mill marks. Fill or grind off nicks and scratches. Defects shall not show when metal is painted.

.2 Conceal welds where possible. Where welds are exposed to view in the finished Work, grind welds to small radius with uniform sized cove. Finish welds to comply with NOMMA Guideline 1: Joint Finishes, Finish #1 – No Evidence of a welded joint.

.3 Distortions shall not be visible to the eye when viewed from any distance or angle.

.4 Fit joints to a hairline finish, inconspicuous as possible to match accepted samples and mock-ups. Where metals are mechanically joined, flush align surfaces between metal faces to maximum tolerance of 0.7 mm.

.5 Conceal fastenings unless otherwise indicated on Drawings.

.6 Form bent-metal corners to smallest radius possible without causing grain separation or otherwise impairing the work.

.7 Shear and punch metals cleanly and accurately. Remove burrs.

.2 Provide quality of workmanship Class 2 for all fabrications exposed to limited view and service areas:

.1 Exposed surface may retain mill marks and moderate irregularities not visible to the eye when viewed from a distance of 30 feet (9.1 m) at any angle.

.2 Concealed welds where possible. Exposed welds are ground with uniform sized cove. Finish welds to comply with NOMMA Guideline 1: Joint Finishes, Finish #2 – Completely sanded joint, some undercutting and pinholes are acceptable.

.3 Distortions shall not be visible to the eye when viewed for a distance of 30 feet (9.1 m) any angle.

.4 Where metals are mechanically joined, flush align surfaces between metal faces to maximum tolerance of 0.039 inch (1.0 mm) with maximum 1/6 inch (1.6 mm) joint gap.

.5 Conceal fastenings unless otherwise indicated on Drawings.

.6 Shear and punch metals cleanly and accurately. Remove burrs.

.3 Provide quality of workmanship Class 3 for all fabrications concealed from view and service areas:

.1 Exposed surfaces shall be prepared as necessary and specified for galvanizing, priming, or painting.

.2 Finish welds to comply with NOMMA Guideline 1: Joint Finishes, Finish #4 – Good quality, uniform undressed weld with minimal spatter.

.3 Bolts, when used, may be exposed to view in the finished Work.

.4 Shear and punch metals cleanly and accurately. Remove burrs.

.3 Use only stainless steel for metal piercing or beyond building the vapour barrier.

.4 Steel: Bars, rolled shapes and plates: low carbon structural quality steel to CAN/CSA-G40.20-13/G40.21, Grade 300W.

.5 Isolation coating: Field apply alkali resistant bituminous paint or epoxy resin solution paint to steel in contact with dissimilar metals and cementitious materials.

.6 Welding:

.1 Employ welders certified in accordance with the following standards: CSA W47.1 for steel welding, CSA W47.2 for aluminum welding and ANSI D1.6/D1.6M for stainless steel welding.

.2 Welding of steel to CSA W59. Welding of aluminum to CSA W59.2. Welding of stainless steel to ANSI D1.6/D1.6M requirements. Welding material shall conform to CAN/CSA W48. Use Products and methods that minimize distortion and develop strength and corrosion resistance of base metals. Obtain fusion without undercut or overlap. Remove welding flux immediately. Finish exposed welds smooth and blended.

.3 Weld corners and seams continuously.

.7 Metal Finishes:

.1 Primed: Factory prime metal fabrications to be field painting in accordance with Division 09 except where fabrications are galvanized, galvanized and painted, or made from stainless steel.

.8 Metal Fabrications Schedule:

.1 Miscellaneous framing and supports that are not a part of structural-steel framework as necessary to complete the Work from structural steel of welded construction including, but not limited to structural support and bracing for folding panel partitions and sliding partitions. Cut, drill, and tap units to receive hardware, hangers, and similar items.

.2 Unistrut Support: design and provide pre-engineered support system by Unistrut to support systems as detailed. Review drawings as noted, design and provide Unistrut support in accordance with partition manufacturer's drawings. Coordinate with lighting, ceiling, mechanical, and structural layouts and other obstructions. Submit shop drawings stamped by Professional Engineer registered at Place of Work.

.3 Steel framing for Adult Change Table – Height Adjustable): Provide concealed structural framing assembly needed to support adult change table including live and deads as recommended by manufacturer for maximum capacity. Fasten location plate with recommended location fasteners for future installation. Submit shop drawings stamped by Professional Engineer registered at Place of Work for review prior to fabrication. Prime paint after fabrication.

.4 Structural support and bracing for operable partitions specified in Section 10 22 26 "Operable Partitions".

Division 06 WOOD, PLASTICS, AND COMPOSITES

1.53 **06 10 00 ROUGH CARPENTRY**

.1 CSA O86 shall be used as reference standards for work of this Section.

.2 Employ a professional structural engineer registered in the Place of the Work, to design components of the Work of this Section requiring structural performance and to be responsible for determining sizes, spacing and loading of components in accordance with applicable codes and regulations. This structural Professional Engineer shall stamp and sign the shop drawings and ensure that this Work is provided in accordance with this design.

.3 Blocking, framing, furring and strapping (concealed):

.1 Use Spruce or Jack Pine conforming to NLGA Standard Grading Rules "Select Merchantable" grade for boards,

.2 "Select Structural" grade for framing straight, dressed four sides, sized and shaped to correct dimensions and profiles, or

.3 Douglas Fir plywood standard construction conforming to CSA O121.

.1 Where surfaces are exposed (exterior sheathing, unfinished, clear finished or painted) use Sanded Grade, Good Two Sides or Good One Side as required to suit conditions, A Grade face veneer for exposed faces and C Grade face veneer for concealed faces. For exterior sheathing use 10 mm plywood.

.2 For concealed plywood blocking use minimum 19 mm Unsanded Sheathing Grade, C Grade veneer faces.

.4 Wood blocking, framing, furring and strapping indicated shall not be regarded as exact or complete. Location and method of securing wood blocking, framing, furring and strapping is left to option of this Subcontractor, method of securing shall not interfere with work of other Subcontractors. Prior to proceeding with installation, review locations, shapes and method of fastening of wood blocking, framing, furring and strapping with Gypsum Board Subcontractor to ensure that sufficient strapping and furring will be installed.

.5 Where wood blocking, framing, furring or strapping is used to support furniture items (e.g. wall mounted storage units) location and method of securing wood blocking shall also be acceptable to the furniture installer. Prior to proceeding with installation, review locations, shapes and method of fastening of wood blocking with the furniture installer to ensure that adequate blocking will be installed.

.6 Install wood, blocking, wood strapping and wood furring rigid, secure, square, level or plumb, framed and erected to maintain the finish dimensions and contours indicated.

.7 Fire retardant treated plywood for mechanical, electrical and communications equipment mounting boards.

.1 No.2 or Better Grade treatable species (Pine or Fir) free of checks, holes, loose knots, pitch, shakes, splits, wane and warp pressure treated plywood with fire treated chemicals in accordance with CAN/CSA-O80 Series, by a licensed producer. All plywood shall be kiln dried to a maximum moisture content of 15% after treatment.

.2 Plywood mounting panels shall be fabricated of one piece plywood sheets where practicable. Do not use waste ends or scrap pieces to form mounting panels. Securely install wood strapping on walls to suit size(s) of plywood mounting panels at minimum 450 mm on centre with fasteners suitable for wall substrate at 300 mm on centre Provide wood strapping at minimum of two (2) edges of plywood mounting panels for edge support. Over wood strapping install 20 mm thick plywood mounting panel(s) with nails or screws fastened into wood strapping at 300 mm on centre.

.3 Follow-up inspection and labelling shall be provided by Underwriters' Laboratories of Canada.

1.54 **06 40 23 INTERIOR ARCHITECTURAL WOODWORK**

.1 Quality Standard:

.1 The “North American Architectural Woodwork Standards (NAAWS) by AWMAC shall be used as reference standard for interior architectural woodwork, construction, materials, finishes, and other requirements.

.2 Grade Classifications:

.1 Paint grade and plastic laminate casework to be Custom Grade.

.2 Stained or transparent finished veneer casework to be Premium Grade.

.3 Paint grade and plastic laminate frames and paneling to be Custom Grade as a minimum.

.4 Stained or transparent finished veneer frames and paneling to be Premium Grade.

.2 Materials to be Forest Stewardship Council (FSC) certified and documented.

.3 Core for veneered panels with “sawcut” reveals to be MDF, unless indicated otherwise on drawings.

.4 Products for plastic laminate flatwork shall comply with ANSI/NEMA LD3.

.5 Plastic laminate for use on surfaces requiring a Flame Spread Value not exceeding 25 shall bear identification indicating performance testing to CAN/ULC S102.2 or ASTM E 84 or UL 723 Class A fire rating requirement, with Flame Spread Value less than 25 and Smoke Developed Value less than 450.

.6 Fabricate wood base from Yellow Poplar to profiles shown on drawings

.7 Wall and ceiling panels shall have fire rated MDF core.

.1 MDF used in wall panels must bear identification indicating performance testing to CAN/ULC S102.2 or ASTM E-84/ULI 723 Class C fire rating requirement, with Flame Spread Value of 150 or less.

.2 MDF used in ceiling panels must bear identification indicating performance testing to CAN/ULC S102.2 or ASTM E-84/ULI 723 Class A fire rating requirement, with Flame Spread Value of 25 or less.

.8 Veneer matching and coordination with door manufacturer.

.1 Veneers used for the flush wood doors, door frames and wall paneling are to be from approved flitches that yield enough veneer for the entire project. For office interiors the minimum veneer leaf width shall be 4 inch (102 mm). For all other areas, the minimum veneer leaf width shall be 6 inch (152 mm). If more than one flitch is needed flitch transition will be at the least noticeable and predetermined and approved location.

.2 Veneer matching for wall panels, veneered doors and veneered frames shall be Book matching in a center balanced layout. Refer also to Section 08 14 16 Flush Wood Doors.

.3 Hand select veneer from architectural grade flitches of the specified species as required to provide uniform grain, pattern, and colour throughout. Bars, obvious waves or knot patterns will not be accepted.

.4 Colour, grain, and pattern of veneers shall be similar and uniform in appearance. Veneer leafs shall be trimmed as required to eliminate colour contrast at joints.

.5 Heads of veneered frames to veneered vertically. Veneers on doors and frames to be sequence match, with each piece of veneer extending from bottom of the door to the top of the frame. Veneer direction as indicated on drawings.

.6 Shop finishing of all veneer matched wall panels, doors and frames and architectural woodwork shall be performed at one facility to ensure exact match of colour, finishing materials and sheen. Finishing shall be performed in the same sequence as the veneer matching to maintain uniform appearance in colour and finish on all adjacent work.

.9 Cabinet Hardware and Accessory Materials: ANSI/BMHA A156.9.

.1 Grommets: Doug Mockett & Company, Inc. No. MM4A liner and No. MM4 grommet cap, 63.5 mm overall diameter, black. For coffee maker supply line: No. OG3 1” grommet set, matte black. Provide where indicated on drawings.

.2 Cabinet Locks: CompX National Cabinet Lock removable 4 pin tumbler, 14A bright nickel plated brass cylinder lock No. C8177 complete with nickel plated lock core, nickel plated C2017 rosette, and nickel plated strike to suit configuration. Keying and number of master keys shall be determined by the Owner.

.3 Semi-Concealed Hinges: Provide ¾” Door Hinge, Grade 2, 5988142 by Richelieu.

.4 Pulls: as indicated on drawings or Product and Colour Schedule.

.5 Box Drawer Slides: 100 pound (45 kg) rated, full extension ball bearing, 1 inch (25 mm) over travel, ½ inch (12 mm) thick.

.6 File Drawer Slides: 100 pound (45 kg) rated, full extension, suspension rail system, 1-½ inches (38 mm) over travel, ½ inch (12 mm) thick.

.7 Shelf Supports: Metal spades and ferrules or Knape & Vogt PK255 ZC zinc plated recessed pilasters and Knape & Vogt 239 ZC clips as indicated on drawings.

.8 Medium Duty Folding Table Brackets: Tikla Series by Haefele. Art. No. 287.48.129.

.9 Coat Rods: 32 mm minimum diameter bright chrome finish, with matching end flanges, polished chrome finish.

.10 Factory Finishing:

.1 Transparent/Stained finish. (Seal*), Stain, sealer, and 2 topcoats of catalyzed lacquer, to sheen indicated. Staining effect to match approved samples. *On closed grain woods seal as required prior to staining.

.2 Opaque Finish. One coat primer/sealer, and 2 topcoats of pigmented catalyzed lacquer to sheen indicated. Colour to match approved samples.]

.11 Edgebanding on decorative laminate casework.

.1 All cupboard/cabinet door, shelf and drawer front edge profiles to be square with thin applied laminate edgebanding unless otherwise noted.

.2 All door and drawer front edgebanding to be laminate to match exposed exterior surface unless otherwise noted.

.12 Provide wood blocking in partitions and other support required to carry weight of woodwork.

.13 Telecommunications backboards to be ¾ inch (18 mm) veneer core fir plywood. Painted both sides, all exposed edges and cut outs with fire retardant paint.

.14 Install woodwork plumb, level, true and straight with no distortions. Shim as required using concealed shims. Install to a tolerance of 1/8 inch in 96 inches (3 mm in 2440 mm) for plumb and level (including tops); and with no variations in flushness of adjoining surfaces. Comply with installation requirements established by referenced standards.

1.55 **06 48 00 WOOD FRAMES**

.1 Quality Standard: "The "North American Architectural Woodwork Standards (NAAWS) by AWMAC shall be used as reference standard for wood frame construction, materials, finishes, and other requirements.

.1 Stained or transparent finished solid wood and veneer frames to be Premium Grade.

.2 Paint grade and plastic laminate frames to be Custom Grade.

.2 Work included: Wood and wood veneer door, sidelite, window and clerestory frames.

.3 Veneer matching and coordination with door manufacturer: Refer to Section 06 40 23 Interior Architectural Woodwork.

.4 Solid wood frames for paint finish to be solid natural Yellow Birch.

.5 Wood and wood veneer frames for clear and stained finishes to be select white Yellow Birch unless noted otherwise in the Product and Colour Schedule.

.6 Factory finishing:

.1 Transparent/Stained finish. (Seal*), Stain, sealer, and 2 topcoats of catalyzed lacquer, to sheen indicated. Staining effect to match approved samples. * On closed grain woods seal as required prior to staining.

.2 Opaque Finish. One coat primer/sealer, and 2 topcoats of pigmented catalyzed lacquer to sheen indicated. Colour to match approved samples.

.7 Field finish frames indicated to receive opaque finish. One coat primer, and 2 topcoats, leaving no brush or roller marks.

.8 Placing Frames: Install wood frames in accordance with "NAAWS: installation requirements. Set frames accurately in position, plumbed, aligned, and braced securely until permanent anchors are set. Unless otherwise indicated secure wood frames in concealed manner to supporting Work. After wall construction is completed, remove temporary braces and spreaders, leaving surfaces smooth and undamaged.

.9 Touch-ups: Where required to repair damage to finished surfaces, any dents, scratches or gouges shall be sanded and filled as needed and the entire surface where the damage occurred shall be refinished.

1.56 **06 91 00 GENERAL INSTALLATIONS**

.1 Comply with:

.1 CSDMA Guide Specification for Installation and Storage of Hollow Metal Doors and Frames for installation of steel doors and frames.

.2 CSDMA Guide Specification for Installation and Storage of Hollow Metal Doors and Frames, NFPA 80-2013 and NFPA 105-2007 for installation of fire rated steel doors and frames.

.3 AWMAC Architectural Woodworking Standards for installation of wood doors and frames.

.4 AWMAC Architectural Woodworking Standards, NFPA 80-2013 and NFPA 105-2007 for installation of fire rated wood doors and frames.

.2 Placing Frames: Set frames accurately in position, plumbed, aligned, and braced securely until permanent anchors are set. After wall construction is completed, remove temporary braces and spreaders, leaving surfaces smooth and undamaged.

.3 Install each door hardware item to comply with manufacturer's written instructions. Do not install surface-mounted items until finishes have been completed on substrates involved. Set units level, plumb, and true to line and location. Adjust and reinforce attachment substrates as necessary for proper installation and operation.

Division 07 THERMAL AND MOISTURE PROTECTION

1.57 **07 21 00 THERMAL INSULATION**

.1 Extruded Polystyrene Rigid Board Insulation:

.1 INS01: At perimeter foundation walls other than masonry walls, at underslabs, provide closed cell extruded polystyrene insulation board to CAN/ULC S701, Type 4 having aged RSI of 0.87 or R-Value of 5.0 per 1 inch (25.4 mm) when determined in accordance with CAN/ULC S770 or 25 psi ASTM C578 Type IV having aged RSI of 0.87 per 1 inch (25.4 mm) when determined in accordance with ASTM C518. Minimum 30 psi (207 kPa) compressive strength.

.1 Products:

.1 "Styrofoam SM" by DuPont.

.2 "Foamular 300" by Owens Corning.

.3 "SOPRA-XPS 30" by Soprema.

.2 INS02: For cavity space of masonry walls, provide closed cell extruded polystyrene insulation board to CAN/ULC S701, Type 3, having aged RSI of 0.87 or R-Value of 5.0 per 1 inch (25.4 mm) when determined in accordance with CAN/ULC S770 or 25 psi ASTM C578 Type IV having aged RSI of 0.87 per 1 inch (25.4 mm) when determined in accordance with ASTM C518. Minimum 15 psi (103 kPa) compressive strength.

.1 Products:

.1 "CavityMate" by DuPont.

.2 "Foamular 200" by Owens Corning.

.3 INS03: For use over foundation wall waterproofing, provide closed cell extruded polystyrene insulation board to CAN/ULC S701, Type 4 having aged RSI of 0.87 or R-Value of 5.0 per 1 inch (25.4 mm) when determined in accordance with CAN/ULC S770 or 25 psi ASTM C578 Type VI having aged RSI of 0.87 per 1 inch (25.4 mm) when determined in accordance with ASTM C518. Minimum 40 psi (276 kPa) compressive strength.

.1 Products:

.1 "Styrofoam Highload 40" by DuPont.

.2 "Foamular 400" by Owens Corning.

.4 INS04: For plaza decks, balconies, roof deck, provide closed cell extruded polystyrene insulation board to CAN/ULC S701, Type 4 having aged RSI of 0.87 or R-Value of 5.0 per 1 inch (25.4 mm) when determined in accordance with CAN/ULC S770 or 25 psi ASTM C578 Type VII having aged RSI of 0.87 per 1 inch (25.4 mm) when determined in accordance with ASTM C518. Minimum 60 psi (414 kPa) compressive strength.

.1 Products:

.1 "Styrofoam PlazaMate" by DuPont.

.2 "Styrofoam Highload 60" by DuPont.

.3 "Formular 600" by Owens Corning

.2 Mineral Wool Semi-Rigid Insulation:

.2 INS30: Foil-faced semi-rigid mineral wool curtain wall insulation boards attached with stick-clips behind curtain wall spandrel panels, with fire rating suitable for integrating with slab edge firestop insulation and sealing specified in Division 07 Section "Fire-Resistive Joint Systems." Foil-faced, slag-wool/rock-wool-fiber board insulation complying with ASTM C612, Type III or Type IVB, nominal density of 8.0 lbs/ft³ (128 kg/m³). Non-combustible to CAN/ULC S114. RSI of 0.74 or R-Value of 4.2 per 1 inch (25.4 mm).

.1 Products:

.1 "Mineral Wool Curtainwall 80" by Johns Manvilles

.2 "Thermafiber FireSpan 90" by Owens Corning

.3 "CurtainRock 80" by Rockwool

.1 INS31: Unfaced, mineral-fibre insulation complying with CAN/ULC S702, Type 1, either dual density or mono density or complying with ASTM C612. Non-combustible to CAN/ULC S114. RSI of 0.74 or R-Value of 4.2 per 1 inch (25.4 mm).

.1 Minimum Densities:

.1 Dual Density:

.1 Outer layer: 6.2 lbs/ft³ (100 kg/m³) to ASTM C303.

.2 Inner layer: 3.8 lbs/ft³ (61 kg/m³) to ASTM C303.

.2 Monolithic Density: 4.3 lbs/ft³ (69 kg/m³) to ASTM C303.

.2 Products:

.1 "Cladstone Water & Fire Block Insulation" by Johns Manville.

.2 "Thermafiber RainBarrier HD" by Owens Corning.

.3 "Cavityrock" by Rockwool

.2 INS40: Unfaced, mineral-fibre insulation to provide fire containment between floors utilizing mineral fibers combined with thermosetting resins; complying with ASTM C612 IVA or IVB. Non-combustible to CAN/ULC S114.

.1 "Thermafiber Safing" by Thermafiber, LLC.

.2 "FBX" by Fibrex, Inc.

.3 "RoxulSafe" by Rockwool.

.3 INS50: Foil-faced semi-rigid insulation glass fiber boards attached with stick-clips behind masonry walls; insulation boards installed 1/2-inch away from back face of masonry walls using standoff spacers that fit over stick-clips. Provide foil-faced, glass-fiber or slag-wool/rock-wool-fiber board insulation complying with ASTM C 612, Types IA and IB, nominal density of 3 lb/cu. ft.

.1 "Fiberglass 700 Series Insulation, 703 FRK-faced" by Owens Corning

.2 "FSK Faced CavityRock Insulation" by Rockwool International

.3 "FSK Faced Knauf Insulation Board" by Knauf Insulation.

1.58 **07 81 16 CEMENTITIOUS FIREPROOFING**

.1 Notify Consultant immediately upon discovery of any missing fireproofing discovered in the course of this Work.

.2 Provide sprayed cementitious fireproofing as indicated on the drawings and specified herein.

.3 Products: "Cafco Blaze-Shield II" by Isolatek International/Cafco Industries Ltd. or other product acceptable to the Consultant. For small patches of 0.1 m^2 and less: Fiber-Patch by Cafco Industries Inc.

.4 Surfacing burning of fireproofing tested to CAN/ULC-S102:

.1 Flame Spread Value: Maximum 0.

.2 Smoke Developed Value: Maximum 0.

.5 Submit shop drawings indicating the material to be used, the required total thickness and density for each steel shape or substrate and the applicable ULC designs.

.6 Prepare the surfaces to receive fireproofing in accordance with the fireproofing manufacturer's written installation instructions.

.7 Apply cementitious fireproofing in accordance with the product manufacturer's written installation instructions in sufficient density and thickness to provide the ULC ratings indicated.

.8 Ensure clips, hangers, supports, sleeves and other attachments to the substrate have been installed.

.9 Patch and repair any existing fireproofing damaged in the execution of the Work.

.10 Testing and inspections shall include, but shall not be limited to the following:

.1 Check by measuring and/or cut tests of completed sprayed fireproofing, that materials are applied to thickness and densities required in accordance with ASTM E605.

.2 Check by measuring and/or cut tests of completed sprayed fireproofing, that materials are applied to have cohesion/adhesion required in accordance with ASTM E736.

.3 Carry out any tests required by the authorities having jurisdiction.

.11 For patching or for new work adjacent to existing fireproofing use an approved dye in the mixture to indicate the extent of the new fireproofing.

.12 Warrant this work for a period of five (5) years against defects and/or deficiencies.

.13 Painting of cementitious fireproofing, where indicated on drawings and schedules:

.1 Prime with a heavy coat of a ULC listed primer for fireproofing materials, Acceptable product A/D TC-55 clear sealer. Apply in strict accordance with manufacturer’s instructions.

.2 Topcoat with a low flame spread rating (FSR 150 or less) latex-based paint, colour as scheduled.

1.59 **07 81 23 INTUMESCENT FIRE-RESISTIVE COATINGS**

.1 Provide intumescent fire-resistive coating Products as indicated on drawings and as scheduled in Section 09 06 15 Products and Colour Schedule.

.2 Product: SprayFilm WB3/ WB4 with SprayFilm Topseal by Cafco Industries Inc. Finish Coat: as recommended by manufacturer, colour to later selection by Consultant.

.3 Installer to be licensed, qualified or approved by the fireproofing manufacturer with staff trained to install products according to the specified requirements.

.4 Follow product manufacturer’s written guidelines for surface preparation, masking, priming, application methods, application rates, drying and recoat times.

.5 Apply fire-resistive coatings in accordance with product manufacturer's written installation instructions in sufficient density and thicknesses to provide the ULC ratings indicated.

.6 Prepare the surfaces to receive fire-resistive coatings in accordance with the fire-resistive coatings manufacturer's written installation instructions. Use only primers approved by the manufacturer.

.7 Ensure clips, hangers, supports, sleeves and other attachments to the substrate have been installed and securely fastened.

.8 Provide intumescent fire-resistive coatings to meet the requirements of the specified ULC Design indicated on drawings.

.9 Surfacing burning of coatings tested to CAN/ULC-S102:

.1 Flame Spread Value: Maximum 10.

.2 Smoke Developed Value: Maximum 50.

.10 Spray apply to extent possible to achieve a smooth consistent finish.

.11 Notify Consultant immediately upon discovery of any missing fireproofing discovered in the course of this Work.

.12 Patch and repair fire-resistive coatings damaged in the execution of the Work.

.13 Prior to applying topcoats, confirm that final dry film thickness has been achieved by measuring with a dry film thickness gauge.

.14 Testing and inspections shall include, but shall not be limited to the following:

.1 Provide test reports for thickness, primers, topcoats, finishing and other materials and procedures affecting the fireproofing work.

.15 Protect completed Work from damage.

.16 Warrant this work for a period of five (5) years against defects and/or deficiencies.

1.60 **07 84 00 FIRE STOPPING**

.1 In all fire separations provide tested fire stop systems at all penetrations for the passage of duct, cable, cable tray, conduit, piping, electrical busways and raceways and similar items through fire- rated vertical barriers (walls and partitions), horizontal barriers (floor/ceiling assemblies), and vertical service shaft walls and partitions.

.2 Notify Consultant immediately upon discovery of any missing fire stopping discovered in the course of this Work.

.3 In all rated fire separations provide tested fire stop systems at all gaps between the top of walls and ceilings, floors or roof assemblies.

.4 Provide materials and systems capable of maintaining an effective barrier against flame, smoke, gases and water in compliance with the requirements of CAN/ULC-S115 and not to exceed the opening sizes for which they are intended.

.1 Acceptable Manufacturers: A/D Fire Protection Systems, or Hilti Construction Chemicals, Inc., or Specified Technologies Inc.

.2 Single Electrical Boxes and Similar Openings and Penetrations:

.1 Moldable putty for firestopping with smoke seal.

.1 Product: Fire Barrier Moldable Putty Pads MPP+ by 3M.

.3 Multiple Penetrant Firestop Applications:

.1 Mortars: Prepackaged dry mixes consisting of a blend of inorganic binders, hydraulic cement, fillers and lightweight aggregate formulated for mixing with water at Project site to form a non-shrinking, homogeneous mortar.

.1 Product: CP 637 Firestop Mortar by Hilti.

.2 Firestop Foam: Two component polyurethane foam.

.1 Product CP 620 Firestop Foam by Hilti.

.4 Slab Edge Firestop Applications:

.1 Silicone Sealants: Single-component, silicone-based, pourable (self-leveling) formulation.

.1 Product: CFS-S SIL SL Firestop Silicone Sealant by Hilti.

.5 Firestop Joint Applications:

.1 Sealant: Acrylic based sealant.

.1 Product: CP 606 Firestop Acrylic Sealant by Hilti.

.2 Smoke and Acoustic Sealant: Acrylic based sealant which reduces the transmission of sound through wall openings.

.1 Product: CP506 Smoke and Acoustic Sealant by Hilti.

.3 Spray: Acrylic based spray.

.1 Product: CFS-SP WB Water-Bases Acrylic Sealant Spray by Hilti.

.6 Through Penetration Firestop Applications:

.1 Intumescent Sealants: Water-based acrylic dispersion.

.1 Product: FS-One Max Firestop Sealant by Hilti.

.2 Firestop Collar Device: Ready-to-use collar.

.1 Product: CP 643 N Firestop Collar by Hilti.

.7 Cable Management Firestop Applications:

.1 Intumescent Sealants: Water-based acrylic dispersion.

.1 Product: FS-One Max Firestop Sealant by Hilti.

.2 Firestop Collar Device: Ready-to-use collar.

.1 Product: CFS-CC Firestop Collar by Hilti.

.5 Fire resistance rating of installed fire stopping assembly shall not be less than the fire resistance of the surrounding wall and floor assembly.

.6 Examine sizes and conditions of voids to be filled and establish correct thicknesses and installation of materials. Prepare surfaces in contact with fire stopping materials to manufacturer's instructions.

.7 Install fire stopping material and components in accordance with ULC certification and manufacturer's instructions.

.8 Testing and inspections shall include, but shall not be limited to the following:

.1 Using a smoke pencil, check for any air movement through the firestopping.

.2 Inspect visually for gaps or voids in the firestopping.

.3 Inspect and test each type of firestopping per floor level. Where high numbers of defective firestops are found during inspection and testing, increase number of each type of firestop inspections and tests as required to locate the defective installation and application procedures.

.4 Where firestopping is removed, replaced and/or repaired, all additional testing required to determine compliance with the specified performance requirements shall be paid by the Contractor at no additional cost to the Owner.

1.61 **07 84 46 FIRE RESISTIVE JOINT SYSTEMS**

.1 Fire-resistive joint systems for floor-to-wall, head-of-wall, wall-to-wall joints. Joints capable of 50 percent movement.

.2 Perimeter fire-resistive joint systems for floor-to-wall joints between perimeter edge of floor assemblies and exterior curtain walls equal to USG Interiors "Thermafiber Safing Insulation" with Specified Technologies "Series AS200 Elastomeric Spray" joint coating, or equivalent product and manufacturer acceptable to the Consultant.

1.62 **07 86 00 SMOKE SEALS**

.1 In all unrated fire separations provide tested smoke seal systems at all gaps between the top of walls and ceilings, floors or roof assemblies.

.2 Notify Consultant immediately upon discovery of any missing smoke seals discovered in the course of this Work.

.3 Provide materials and systems capable of maintaining an effective barrier against flame, smoke and gases in compliance with the requirements of CAN/ULC-S115 and not to exceed the opening sizes for which they are intended.

.1 Acceptable Manufacturers: A/D Fire Protection Systems, or Hilti Construction Chemicals, Inc., or Specified Technologies Inc.

.2 Smoke Joint Sealant: Acrylic based sealant.

.1 High performance acrylic based sealant for sealing construction joints and through penetrations in fire-rated assemblies.

.2 Product: CP606 Smoke Sealant by Hilti.

.4 Examine sizes and conditions of voids to be filled and establish correct thicknesses and installation of materials. Prepare surfaces in contact with smoke seals materials to manufacturer's instructions.

.5 Install smoke seal material and components in accordance with ULC certification and manufacturer's instructions.

.6 Testing and inspections shall include, but shall not be limited to the following:

.1 Using a smoke pencil, check for any air movement through the smoke seals.

.2 Inspect visually for gaps or voids in the smoke seals.

.3 Test for lack of adhesion of smoke seal to adjacent material and lack of cohesion within the smoke seal material.

.4 Inspect and test each type of smoke seal per floor level. Where high numbers of defective smoke seals found during inspection and testing, increase number of each type smoke seal inspections and tests as required to locate the defective installation and application procedures.

.5 Where smoke seals are removed, replaced and/or repaired, all additional testing required to determine compliance with the specified performance requirements shall be paid by the Contractor at no additional cost to the Owner.

1.63 **07 92 00 JOINT SEALANTS**

.1 Submit to joint-sealant manufacturers, for preconstruction compatibility and adhesion testing indicated below, samples of materials that will contact or affect joint sealants. Use ASTM C1087 to determine whether priming and other specific joint preparation techniques are required to obtain rapid, optimum adhesion of joint sealants to joint substrates. Schedule sufficient time for testing and analyzing results to prevent delaying the Work. Testing will not be required if joint- sealant manufacturers submit joint preparation data that are based on previous testing, not older than 24 months, of sealant products for adhesion to, and compatibility with, joint substrates and other materials matching those submitted.

.2 Before installing sealants, field test their adhesion to Project joint substrates. Notify Consultant seven days in advance of dates and times when test joints will be erected. Test joint sealants according to Method A, Field-Applied Sealant Joint Hand Pull Tab, in Appendix X1 in ASTM C 1193 or Method A, Tail Procedure, in ASTM C 1521. Do not use sealants that fail to adhere to joint substrates during testing.

.3 Employ only qualified applicators with proven experience in this type of Work.

.4 Colours to match adjacent construction or to later selection by Consultant.

.5 Exterior Sealants:

.1 Multicomponent sealant meeting ASTM C920, Type M, Grade NS, Class 25 or 50, use T, NT, M, A, O.

.1 Products:

.1 BASF MasterSeal NP 2.

.2 Pecora Corporation Dynatrol II.

.3 Sika Corporation Sikaflex 2C NS.

.4 Tremco Incorporated Dymeric 240FC.

.2 Single component medium modulus silicone sealant meeting ASTM C920, Type S, Grade NS, Class 25, use NT, M, A, O.

.1 Product: Dow Corning Contractors Weatherproofing Sealant.

.3 Single component high performance urethane sealant to ASTM C920, Type S, Grade NS, Class 25 to 50, use NT, M, A, O.

.1 Products:

.1 BASF MasterSeal NP 1.

.2 Sika Corporation Sikaflex 1a.

.3 Tremco Incorporated Dymonic 100

.6 Interior Sealants:

.1 Mildew resistant sealant meeting ASTM C920, Type S, Grade NS, Class 25 or 50, for Use NT formulated with fungicide, intended for washrooms, showers, and other high humidity areas.

.1 Products:

.1 Dow Corning Corporation 786 Mildew Resistant.

.2 GE Advanced Materials SCS 1700.

.3 Pecora Corporation, 898.

.4 Sika Corporation Sikasil GP.

.5 Tremco Incorporated, Tremsil 200 Sanitary.

.2 Mildew Resistant; FDA Compliant Sealant: ASTM C920, Type S, Grade NS, Class 25 or 50, for Use NT formulated with fungicide, FDA-compliant, NSF 51-compliant UL-listed silicone, intended for food zones of any type.

.3 Acrylic latex or siliconized acrylic latex general use sealant meeting ASTM C834, Type OP, Grade NF.

.1 Products:

.1 BASF MasterSeal NP 520.

.2 Pecora Corporation AC-20+

.3 Tremco Incorporated Tremflex 834.

.7 Primer or surface conditioner: Clear, non-staining type as recommended by sealant manufacturer to suit surfaces to receive sealant.

.8 Joint Filler (Backer Rod): Closed cell, extruded polyethylene non-outgassing, non-staining, compressible, self restoring plastic foam filler as recommended by sealant manufacturer.

.9 Cleaning material: Xylol, methyl-ethyl-ketone, toluol, or as recommended by sealant manufacturer.

.10 Remove dust, loose mortar, oils and grease and other foreign materials from joints and prepare surfaces as required for maximum adhesion. Use dry clean compressed air if necessary to clean out joints. If required by sealant manufacturer apply primer or surface conditioner to joints to prevent staining, assist the bond, and to stabilize porous surface.

.11 Where necessary to prevent contamination or marring surfaces adjacent to joints, mask surfaces with masking tape. After joint sealant has been applied and initial set has been achieved, immediately remove tape.

.12 Install in accordance with manufacturers written recommendations.

.13 Field test joint-sealant adhesion to joint substrates for each kind of sealant and joint substrate. Test joint sealants according to Method A, Field-Applied Sealant Joint Hand Pull Tab, in Appendix X1 in ASTM C 1193.

.14 Apply sealant at the junction of the following exterior finish Products, unless sealant is specified to be included as part of the Work of Sections specified:

.1 Concrete to concrete, concrete to metal, concrete to stone, metal to stone, metal to metal, stone to stone, stone to precast concrete fins.

.15 Apply sealant at the junction of the following interior finish Products, unless sealant is specified to be included as part of the Work of Sections specified: concrete to concrete, concrete to metal, concrete to stone, metal to stone, metal to metal, stone to stone, gypsum board to concrete, gypsum board to metal, gypsum board to stone.

.1 Mildew-Resistant Silicone Sealant:

.1 Joints between plumbing fixtures and adjoining walls, floors, and millwork counters, between backsplash and walls.

.2 Joints between toilet accessories and adjoining walls, floors and counters.

.3 Control and expansion joints in or around surfaces of ceramic tile, solid surfacing materials, and plastic laminate in toilet rooms, showers, locker rooms, bars, and kitchens, and other wet areas subject to moisture and mildew.

.2 Mildew Resistant; FDA Compliant Sealant: Use in place of mildew-resistant silicone sealant where food areas apply.

.3 Acrylic Latex / Siliconized Acrylic Latex:

.1 Perimeter joints between interior wall surfaces and frames of interior door frames, window frames, and elevator entrances.

.2 Caulk around ducts pipes and conduit penetrating non fire rated partitions.

.3 Field-painted gypsum board surfaces.

Division 08 OPENINGS

1.64 **08 11 13 HOLLOW METAL DOORS AND FRAMES**

.1 Quality Standard:

.1 Comply with CSDMA Guide Specification for Installation and Storage of Hollow Metal Doors and Frames for installation of steel doors and frames.

.2 Doors and frame product shall be manufactured and installed in accordance with the CSDMA's, "Recommended Dimensional Standards for Commercial Steel Doors and Frames".

.3 Fabricate steel doors and frames to non-accumulative tolerances of CSDMA.

.4 Fabricate fire rated steel doors and frames to non-accumulative tolerances of CSDMA.

.2 Manufacturers: All Steel Doors 2000 Ltd, Apex Industries Inc, Artek Door (1985) Ltd, Daybar Industries Ltd, Fleming Door Products (Assa Abloy), Gensteel Doors, LMT Group Inc, M.J. Daley Manufacturing Co. Ltd, Shanahan's Manufacturing Ltd, Trillium Steel Doors Limited, Vision Hollow Metal Limited.

.3 Steel:

.1 Tensioned levelled steel to ASTM A924/A924M, galvanized or galvannealed to ASTM A653/A653M, Commercial Steel CS, Type B, coating designation ZF180 (G60) or ZF120 (A40).

.2 Steel shall be free of scale, pitting, coil breaks, surface blemishes, buckles, waves, and other defects.

.3 Minimum thickness of coated sheet steel complying with ASTM A653/A653M in accordance with Appendix 1: Steel Thicknesses and gauges of CSDMA “Recommended Specifications for Commercial Steel Door and Frame Products”.

Gauge	Nominal Equivalent Thickness	A.I.S.I +/-Tolerances	Minimum Nominal Thicknesses - Tolerance
10	0.138” (3.51 mm)	0.009" (0.23 mm)	0.129” (3.28 mm)
12	0.108" (2.74 mm)	0.009" (0.23 mm)	0.099" (2.51 mm)
14	0.078” (1.98 mm)	0.008" (0.20 mm)	0.070” (1.78 mm)
16	0.063" (1.60 mm)	0.006" (0.15 mm)	0.057" (1.45 mm)
18	0.051" (1.30 mm)	0.005" (0.13 mm)	0.046" (1.17 mm)
20	0.039" (1.00 mm)	0.004" (0.10 mm)	0.035" (0.90 mm)
22	0.033" (0.84 mm)	0.004" (0.10 mm)	0.029" (0.74 mm)

.1 Finish: Rust inhibiting primer finish.

.4 Door Fabrication:

.1 Minimum steel gauges for door component parts:

.1 Hinge reinforcements (high frequency type): 10 gauge.

.2 Lock and exit device reinforcements: 16 gauge.

.3 Strike reinforcements: 12 gauge.

.4 Flush bolt edge reinforcements: 12 gauge.

.5 Flush bolt guides: 10 gauge.

.6 Surface closer box type reinforcements: 14 gauge.

.7 Reinforcements for all other surface applied hardware: 16 gauge.

.8 End channels: 16 gauge.

.9 Top and bottom caps: 16 gauge.

.10 Glazing trim and stops: 20 gauge.

.11 Astragals: 12 gauge.

.2 Steel doors to be minimum 44 mm thick unless otherwise indicated or scheduled.

.3 Provide top and bottom of doors with continuous inverted, recessed, steel end channels extending the full width of the door, welded to each face sheet at 150 mm (6 inches) on center maximum.

.4 Interior Doors: Fabricate interior doors, except as noted below, as 18 gauge face sheet, laminated honeycomb core, seamless construction.

.5 Fabricate interior Janitorial Closet doors as 16 gauge face sheet, laminated polystyrene core, lock seam construction, factory welded steel top and bottom caps, with visible edge seams.

.6 Fire-Rated Door Assemblies:

.1 Comply with NFPA 80 and NFPA 105 for installation of fire rated doors and frames.

.2 Assemblies listed and labelled, for fire-protection ratings indicated.

.3 Vision framing for fire rated doors: Minimum 0.91 mm thick, two piece, metallic coated steel sheet, factory formed vision frames in shapes and sizes in accordance with ULC classifications requirements as indicated, for use on 45 mm or 32 mm thick fire rated/time temperate rise rated hollow metal and/or wood doors. Fabricate vision frames with tight mitred corners, secured together with special security fasteners. Locate ULC classification labels in the lower right hand corner of the vision frames

.7 Hollow metal transom panels to be of same construction as the door in the same frame.

.5 Frame Fabrication:

.1 Interior frames: Fabricate interior frame product as 16 gauge, face welded construction. Continuously weld internally all perimeter corner joint profile faces. Knock down frames are not allowed.

.2 Minimum steel gauges for frame component parts:

.1 Hinge reinforcements (high frequency type): 10 gauge.

.2 Strike reinforcements: 16 gauge.

.3 Flush bolt reinforcements: 14 gauge.

.4 Surface closer reinforcements: 12 gauge.

.5 Reinforcements for all other surface applied hardware: 18 gauge.

.6 Mortar guard boxes: 22 gauge.

.7 Wall anchors:

.1 Masonry T-strap type: 16 gauge.

.2 Masonry wire type: 4 mm (0.156 inch) diaeter.

.3 Masonry stirrup-strap type – stirrup: 16 gauge.

.4 Masonry stirrup-strap type – 50 mm by 250 mm strap: 16 gauge.

.5 Steel or wood stud type: 20 gauge.

.6 Existing masonry/concrete wall type: 18 gauge.

.7 Anchor bolt guide: 16 gauge.

.8 Floor anchors: 16 gauge.

.9 Glazing stops : 20 gauge.

.10 Jamb spreaders20 gauge.

.11 Channel extensions: 12 gauge.

.6 Fabricate steel doors and frames to non-accumulative tolerances of CSDMA.

.7 Fabricate fire rated steel doors and frames to non-accumulative tolerances of CSDMA.

.8 Door Hardware:

.1 Location of door finish hardware for steel doors and frames and fire rated steel doors and frames shall comply with CSDMA and NFPA 80.

.2 Mortise, blank, reinforce, drill, tap, and cut out at the factory for templated hardware only (including specialty security hardware), in accordance with the approved hardware schedule and templates provided by the hardware supplier.

.3 Install in accordance with Section 08 71 00 Door Hardware.

.9 Placing Frames:

.1 Set frames accurately in position, plumbed, aligned, and braced securely until permanent anchors are set. After wall construction is completed, remove temporary braces and spreaders, leaving surfaces smooth and undamaged.

.2 Grout frames in accordance with NAAMM HMMA-820 TN01.

.3 After wall construction is completed, remove temporary braces and spreaders, leaving surfaces smooth and undamaged.

.4 Insulate exterior frames with loose batt type mineral fibre insulation, density of 24 kg/m^3 (1.5 pcf) minimum, conforming to ASTM C665 by installation contractor or

acceptable spray foam sealant/ insulation filler by Dow Chemical or other acceptable equivalent.

1.65 **08 12 16 ALUMINUM FRAMES**

.1 Products as scheduled in Section Section 09 06 00 Legend of Products and Legend of Materials.

.2 Provide aluminum framing systems fabricated from extruded aluminum members of size, profile and finishes indicated. Include sub-frames and other reinforcing members required for performance.

.3 Mitre all corners where open ends of extrusions or voids would be visible if butt joints were used. This includes sidelights and overhead borrowed light frames.

.4 Provide steel reinforcement of aluminum framing members where indicated on drawings, or recommended by manufacturer.

.5 Provide battens, glazing stops, other trim and accessories to profiles and materials indicated on drawings.

.6 Provide suitable anchorage for each wall condition, to include sill anchorage at doors, head anchorage at all openings 900 mm and wider, intermediate evenly space jamb anchors not to exceed 600 mm o.c.. All frame fastenings and anchors shall be concealed.

.7 Reinforcement: Provide reinforcement at builders hardware and to prevent distortion of frames.

.8 Machine aluminum frames for mounting of hardware.

.9 Provide reinforcements at hinge locations, strikes, and at closers.

.10 Comply with manufacturer's instructions and recommendations for installation.

.11 Set units plumb, level, and true to line, without warp or rack of framing members, doors, or panels. install components in proper alignment and relation to established lines and grades indicated. Provide proper support and anchor securely in place.

1.66 **08 14 16 FLUSH WOOD DOORS**

.1 Quality Standard:

.1 The “North American Architectural Woodwork Standards (NAAWS)” by AWMAC shall be used as a reference standard for wood doors.

.2 Grade Classifications:

.1 Paint grade doors to be Custom Grade, with faces of closed-grain hardwood veneer or 1/8 inch (3 mm) tempered hardboard.

.2 Plastic laminate doors to be Custom Grade, with faces of high pressure laminate, General Purpose Grade. Vertical grade not allowed.

.3 Stained or transparent finished veneer doors to be Premium Grade, with faces of species indicated.

.2 Veneer matching and coordination with woodwork manufacturer: Refer to Section 06 40 23 Interior Architectural Woodwork.

.3 Products for plastic laminate flatwork shall bear identification indicating performance testing to CAN/ULC S102.2 or ASTM E84/UL 723 Class A fire rating requirement, with Flame Spread less than 25 and Smoke Developed less than 450.

.4 Interior Door Construction:

.1 Solid core, particle board Grade LD-2 or M-2 with minimum five plies with stiles and rails bonded to core, then entire unit abrasive planed before veneering.

.2 Door Edges: Minimum 1-7/6 (36mm) of structural composite lumber with laminated with hardwood edges to be wood veneer.

.3 Vision framing: Provide manufacturer's standard wood beads unless otherwise indicated on Drawings.

.5 Fire-Rated Door Assemblies:

.1 Construction and core specified above for type of face indicated or manufacturer's standard mineral-core construction as needed to provide fire rating indicated.

.2 Edge Construction: manufacturer's standard edge construction as needed to provide fire rating indicated.

.3 Pairs: Manufacturer's standard astragals and seals as needed to provide fire rating indicated, for pairs of fire-rated doors, unless otherwise indicated.

.4 Comply with NFPA 80 and NFPA 105 for installation of fire rated doors and frames.

.5 Assemblies listed and labelled, for fire-protection ratings indicated.

.6 Vision framing for fire rated doors: Minimum 0.91 mm thick, two piece, metallic coated steel sheet, factory formed vision frames in shapes and sizes in accordance with ULC classifications requirements as indicated, for use on 45 mm or 32 mm thick fire rated/time temperate rise rated hollow metal and/or wood doors. Fabricate vision frames with tight mitred corners, secured together with special security fasteners. Locate ULC classification labels in the lower right hand corner of the vision frames

.6 Door Hardware:

.1 Provide wood blocking in particle board doors for hardware applicable to each door:

.1 HB-1, minimum 125 mm (5") wide, full door width, top-rail blocking for closure devices or flush bolts or for sliding door hardware.

.2 HB-2, minimum 125 mm (5") wide, full door width, bottom-rail blocking for doors with protection plates (kick plates, armour plates), concealed door seals, automatic bottoms, pivots or floor bolts.

.3 HB-4, minimum 125 mm (5") wide x 250 mm (10") high blocking for doors with mortise locks and pockets.

.4 HB-5, minimum 125 mm (5") wide x 250 mm (10") high blocking for hinges.

.5 HB-6, minimum 125 mm (5") wide, full door width, mid-rail blocking for fire exit devices.

.6 HB-7, minimum 125 mm (5") wide, full door height, for doors with continuous type hinges.

.2 For mineral-core doors use composite blocking with improved screw-holding capability.

.3 Install in accordance with Section 08 71 00 Door Hardware.

.7 Factory finishing: Comply with “NAAWS” unless noted otherwise.

.1 For transparent/stained and opaque finishes: finish both door faces, finish both vertical edges and top to match faces, and seal door bottom.

.2 For high pressure decorative laminate finished doors: finish both door faces in HPDL, finish both vertical edges and top with paint or stain to match face appearance as noted on drawings, and seal door bottom.

.3 Transparent/Stained finish. (Seal*), Stain, sealer, and 2 topcoats of catalyzed lacquer, to sheen indicated. Staining effect to match approved samples. * On closed grain woods seal as required prior to staining.

.4 Opaque Finish. One coat primer/sealer, and 2 topcoats of pigmented catalyzed lacquer to sheen indicated. Colour to match approved samples.

.8 Field finish doors indicated to receive opaque finish. One coat primer, and 2 topcoats, leaving no brush or roller marks.

.9 Trim non-rated door widths as required by cutting equally on top and bottom of doors edges. Reseal and refinish all cut or planed surfaces immediately to match factory finish.

.10 Trim door height by cutting bottom edges to a maximum [12mm (1/2”)].

.11 Touch-ups. Where required to repair damage to finished surfaces, any dents, scratches or gouges shall be sanded and filled as needed and the entire surface where the damage occurred shall be refinished.

1.67 **08 31 13 ACCESS DOORS AND FRAMES**

.1 Products as scheduled in Section 09 06 00 Legend of Products and Legend of Materials.

.2 Work included: Provide access doors and frames in minimum sizes unless otherwise indicated on Drawings:

.1 300 mm (1’-0”) x 450 mm (1’-6”) for hand access.

.2 600 mm (2’-0”) x 600 mm (2’-0”) for body access.

.3 Fire Rated Assemblies: Access doors shall be tested by fire testing laboratories acceptable to authorities having jurisdiction with approved ULC design and tested to CAN/ULC S104 for installation in vertical wall assemblies and CAN/ULC S101 for installation in horizontal ceiling assemblies.

.4 Acoustic Assemblies: Insulate access panels and include seals to maintain the acoustical performance of the separation.

.5 Exposed to View / Front of House Areas; Gypsum Board Assemblies:

.1 Steel access panel door with recessed door panel for the acceptance of a 16 mm (5/8") gypsum board panel insert with factory applied prime powder coat or baked enamel finish to receive site painting.

.2 Include gypsum board bead frame for inconspicuous access door installation and screwdriver operated cam lock.

.3 Panels shall lift out of opening.

.6 Service Areas / Mechanical and Electrical Rooms / Storage Closets / LAN Rooms:

.1 Flush installed steel access panel door with factory applied prime powder coat or baked enamel finish, standard white colour

.2 Include narrow flush panel frame and screwdriver operated cam lock.

.3 Panels shall lift out of opening.

1.68 **08 71 00 DOOR HARDWARE**

.1 Products as scheduled in Section 09 06 00 Legend of Products and Legend of Materials.

.2 Read in conjunction with hardware consultant's specifications and hardware sets.

.3 Quality Standard: The Door and Hardware Institute (DHI) Installation Guide for Doors and Hardware DHI A115.1G, shall be the reference standard for door hardware.

.4 Coordination:

.1 Coordinate door hardware with door reinforcing. Furnish shop to coordinate installation.

.2 Coordinate with the electrical subcontractor and provide necessary wiring, conduit and power supply feed. Conceal wiring and conduit from view.

.5 Shop drawings: Submit the shop drawings indicating the system arrangement and component sizes, method of assembly and anchorage, locations of push buttons and card reader and finishes.

.6 Hardware Schedule: Prepare door hardware schedule under the supervision of supplier, detailing fabrication and assembly of door hardware, as well as procedures and diagrams. Coordinate the final door hardware schedule with doors, frames, and related work to ensure proper size, thickness, hand, function, and finish of door hardware.

.1 Organization: Organize the door hardware schedule into door hardware sets indicating complete designations of every item required for each door or opening.

.2 Provide complete hardware sets for all openings shown, in compliance with local codes and industry standards.

.3 Where required to match existing building items, provide manufacturers and products that match building standard.

.4 Coordinate door function and keying with tenant / Owner.

.5 Fire-Rated Door Assemblies: Provide door hardware for assemblies complying with NFPA 80 that are listed and labeled by a testing and inspecting agency acceptable to authorities having jurisdiction.

.6 Provide 3 hinges on doors less than 7 feet 6 inches (2280 mm) in height and one additional hinge for each 2 feet 6 inches (760 mm) or fraction thereof of height above 7 feet 6 inches (2280 mm).

.7 Provide strike boxes, supplied with hardware, behind strikes on all frame types.

.8 Mount hardware to suit door elevations. Unless otherwise directed by the consultant, install hardware at the following mounting heights:

.1	Locksets	40 inches (1015 mm)
.2	Exit device	40 inches (1015 mm)
.3	Push/Pull	42 inches (1065 mm)
.4	Deadlock	48 inches (1220 mm)
.5	Coat hook	60 inches (1525 mm)
.6	Coat hook	47 inches (1195 mm) - Barrier Free mounting height

.7 Supplier Qualifications: Door hardware supplier with warehousing facilities in Project's vicinity and who is or employs a qualified Architectural hardware consultant, available during the course of the work to consult with Contractor, Consultant, and Owner about door hardware and keying.

.8 Acceptable Hardware Suppliers: Unless noted otherwise for individual hardware items, the hardware is to be supplied by Trillium Architectural Products, 52 Prince Andrew Place, Toronto, ON M3C 2H4. Tel: 416 391-5555.

.9 Retrofit: Where new hardware is being installed on existing doors or frames, include for repairs, reinforcing, patching and reworking as required to ensure proper installation and operation of new hardware.

1.69 **08 71 00 DOOR HARDWARE SCHEDULE**

.1 This schedule occurs after the end of Section 01 10 10 Project Requirements.

1.70 **08 71 13 AUTOMATIC DOOR OPERATORS**

.1 Quality Standards:

.1 ANSI/BHMA A156.10 (latest edition) Power Operated Pedestrian Doors Standard,

.2 ANSI/BHMA A156.19 (latest edition) Power Assist and Low Energy Power Door Operators,

.3 ANSI/UL 325 and CUL 325 (Latest Edition) standard for Electric Door, Drapery, Gate, Louver and Window Operators and Systems.

.2 Installer to be authorized by the automatic door operator manufacturer, for both the installation and maintenance of the units required for this project.

.3 Provide the Work of this Section in accordance with manufacturer's instructions, plumb, square, level at correct elevation, in alignment with adjacent work, anchored securely, and adjusted for proper function.

.4 Coordinate the Work of this Section with the electrical contractor and provide necessary wiring, conduit and power supply feed. Conceal wiring and conduit from view

.5 Shop drawings: Submit the shop drawings indicating the following: system arrangement and component sizes, method of assembly and anchorage, locations of push buttons and card reader and finishes.

.6 Recommended maintenance and operating data: Submit 3 copies of the system manufacturers' procedures as part of the Project Record Manual.

.1 Surface Mounted Automatic Door Operators (Secondary suite entrances):

.1 Door opens by door operator switch and closes by time delay as follows:

.1 After Hours: Outside push button requires the locking device to be released by card reader before the operator opens door. If push button is not depressed within 15 seconds of the strike being released by the card reader, the locking device must be automatically activated. Inside door operator switch reader releases locking device before operator opens door.

.2 Normal Hours: As above for After Hours.

.2 Presence Sensors: Not applicable.

.3 If push buttons are not activated the door shall operate as a manual door only.

.4 Provide key switch on inside of suite to disable the door operator.

.5 Acceptable products: Record 8100 – Owner Standard.

.2 Concealed Automatic Door Operators (Tempered glass main suite entrances):

.1 Door opens by push button and closes by time delay as follows:

.1 After Hours: Outside push button requires the locking device to be released by card reader before the operator opens door. If push button is not depressed within 15 seconds of the locking device being released by the card reader, the locking device must be automatically activated. Inside push button releases locking device before operator opens door.

.2 Normal Hours: Door opens by push button switches outside and inside, closes by time delay. Inside and outside push button switches release locking device before operator opens door.

.2 Presence Sensors: Not applicable.

.3 If push buttons are not activated the door shall operate as a manual door only.

.4 Provide key switch on inside of suite to disable the door operator.

.5 Acceptable products: Swingmaster 405 by Besam Inc., Series 4800 LE by Horton Automatics or HA-8 CH by Hunter.

.7 Safety sensors: [Qty 2 superscan II, door mounted presence sensors by BEA.]

.8 Operator Hood finish: Finish and colour to match adjacent door frames. Where frames are wood, finish to be clear anodized aluminum.

.9 Door Activation Wall Plates:

.1 For installation in aluminum mullion frame: Narrow stile, complete with barrier-free logo, door operator manufacturer's standard.

.2 For installation in other than aluminum mullions: Standard 6 inches (150 mm) round push plate switches with handicapped logo and “push to open” text.

.10 Card Reader: Specified by Owner’s security consultant and provided by the security contractor. Card reader to be compatible with base building systems. Include coordination and interface with Owner’s security contractor.

.11 Installation: Install door hardware to comply with product manufacturer's written instructions. Do not install surface-mounted items until finishes have been completed on substrates involved. Set units level, plumb, and true to line and location. Adjust and reinforce attachment substrates as necessary for proper installation and operation.

1.71 **08 81 00 GLASS GLAZING**

.1 Design glass in accordance with CAN/CGSB 12.20 for Buildings and make determinations as to thickness and tempering of glass as required to suit applications complying to the building code design and fire rating requirements and regulations of authorities having jurisdiction at the Place of Work, which shall be minimum, except where more stringent requirements are specified herein. In case of conflict of requirements comply with most stringent requirements.

.2 General: Provide glazing capable of withstanding anticipated loads without failure, including loss or glass breakage attributable to defective manufacture, fabrication, and installation; failure of sealants or gaskets to remain watertight and airtight; deterioration of glazing materials; or other defects in construction.

.3 Warranties:

.1 Provide 10 year manufacturer and installer warranties against failure of insulating glass units.

.2 Provide 5 year manufacturer's warranty from the date of manufacture that fully tempered glass that has been heat soaked, will not break spontaneously as a result of nickel sulfide (NiS) inclusions at a rate exceeding 0.5% (5/1000).

.3 Provide 5 year warranty on laminated glass products

.4 Provide 10 year warranty on coated glass products.

.5 Provide 20 year warranty on sealant.

.4 Products:

.1 Float Glass: CAN/CGSB 12.3, Glazing Quality or ASTM C 1036, Type I, Quality-Q3, Class I (clear) unless otherwise indicated.

.2 Ultraclear Float Glass: ASTM C 1036, Type I, Quality-Q3, Class I, complying with other requirements specified and with visible light transmission not less than 91 percent and solar heat gain coefficient not less than 0.87. Subject to compliance with requirements, provide one of the following:

.1 AGC Glass Company North America, Inc.; Krystal Klear.

.2 Guardian Industries Corp.; Ultrawhite.

.3 Pilkington North America; Optiwhite.

.4 PPG Industries, Inc.; Starphire.

.3 Heat Treated Float Glass: Clear CAN/CGSB 12.1 and ASTM C 1048; Type I; Quality-Q3; Class I (clear) unless otherwise indicated; of kind and condition indicated.

.1 Flatness Tolerances: Overall bow and warp shall not exceed 50 percent of values tabulated in ASTM C 1048.

.2 Fully Tempered Glass: Tempered architectural safety glass shall conform to ANSI Z97.1 and CPSC 16 CFR 1201.

.1 Provide heat soak testing conforming to EN14179 which includes a 2 hour dwell at 550°F ± 18°F (290°C ± 10°C).

.3 Fabrication Process: By horizontal (roller-hearth) process with roll-wave distortion parallel to bottom edge of glass as installed unless otherwise indicated. Direction of roller wave shall be consistent throughout building.

.1 Roller wave peak-to-valley deviation shall not exceed 0.002 inch "Peak to Valley" in the central area and 0.008 inch within 10-1/2 inches of the leading and trailing edge.

.2 For uncoated glass, comply with requirements for Condition A.

.3 For coated vision glass, comply with requirements for Condition C (other coated glass).

.4 Laminated Glass. CAN/CGSB 12.1 or ASTMC1172, and complying with 16 CFR1201 for Category II materials. Provide laminated glass panels using materials with a proven record of no tendency to bubble, discolour, or lose physical and mechanical properties after fabrication and installation. Two layers of minimum 6-mm thick fully clear glass laminated together with 0.060 inch thick clear polyvinyl butryal (PVB) sheet interlayer. At canopies and balustrades, use 0.090 inch thick ionoplast (SGP) interlayer.

.5 Insulating Glass: Pre-assembled, sealed units complying with ASTM E744, Class A, ASTM E2188, ASTM E2189 and ASTM E2190 having dual seal, with polyisobutylene and silicone primary and secondary sealant, sealed edges and pressure equalized to prevent bowing. Provide stainless steel spacer, dessicant and glass types indicated on schedule.

.6 Low e Coatings: High performance, low emissivity (low e) coating, applied by second generation, sputtering vapour deposition (MSVD) method and shall conform to ASTM C1376.

.7 Spandrel panels of 1 inch insulating glass units same as vision glass except with ceramic frit on surface No. 4. Ceramic frit coated glass shall conform to CAN/CGSB 12.1 and ASTM C1048, Condition C, Type 1, Quality Q3 and GANA/GTA 95-1-31. Ceramic frit colour and pattern shall be as selected later by the Consultant from the manufacturer's colour and pattern ranges.

.8 Glass Types: Provide and install glass and glazing of the following types:

.1 GL01: "VE1-2M" (Viracon) at upper floors

.2 GL02: "VE24-2M" (Viracon) at storefront

.3 GL20: 13/16 inch thick laminated glass consisting of 2 layers of 3/8 inch thick FT clear lite laminated with 0.06 inch clear ionoplast interlayer

.1 Location: Exterior glass railing

.4 GL21: 13/16 inch thick laminated glass consisting of 2 layers of 3/8 inch thick FT clear lite laminated with 0.06 inch clear ionoplast interlayer

.1 Location: Glass at canopy

.5 GL80: Elevator cab walls, etched mirror glass, fully tempered.

.9 Install glass in accordance with GANA Glazing Manual and NGA Glass Installer Manual.

.5 Provide fire protection rated laminated glass minimum 8 mm thick, complying with testing requirements in 16 CFR 1201 for Category II materials where installed in a door or frame required to have a fire resistance rating unless noted otherwise. Provide appropriate thicknesses to suit fire ratings indicated.

.6 Provide glass and other glazing products in sizes required to glaze openings indicated for Project, with edge and face clearances, edge and surface conditions, and bite complying with written instructions of product manufacturer and referenced glazing standard, to comply with system performance requirements.

.7 Glazing Installation: Comply with combined written instructions of manufacturers of glass, sealants, gaskets, and other glazing materials, unless more stringent requirements are indicated, including those in referenced glazing publications.

.8 Provide minimum 6mm Back Painted Glass (Colour as specified in Legend of Product / Legend of Materials unless otherwise noted in Drawings.)

.1 Acceptable Product and Manufacturer:

.1 Magnetic White Board Collection by SPS Glass and Metals.

.2 Starphire tempered back painted glass with magnetic backing by Goldray Industries Ltd.

.9 Provide Back Painted Glass Accessories:

.1 A set of 10 Rare-Earth Circular Magnets by Lee Valley Tools Ltd per back painted glass with magnetic surface. Size and magnetic strength as recommended by manufacturer.

.2 Minimum 9 inch magnetic marker trays per back painted glass with magnetic surface.

1.72 **08 80 10 INTERIOR GLAZING**

.1 Products as scheduled in Section 09 06 00 Legend of Products and Legend of Materials.

.2 Design glass in accordance with CAN/CGSB 12.20 and make determinations as to thickness and tempering of glass as required to suit applications complying to the building code design and fire rating requirements and regulations of authorities having jurisdiction at the Place of Work, which shall be minimum, except where more stringent requirements are specified herein. In case of conflict of requirements comply with most stringent requirements.

.3 Provide glass and other glazing products in sizes required to glaze openings indicated for Project, with edge and face clearances, edge and surface conditions, and bite complying with written instructions of product manufacturer and referenced glazing standard, to comply with system performance requirements.

.4 Provide glazing capable of withstanding anticipated loads without failure, including loss or glass breakage attributable to defective manufacture, fabrication, and installation; failure of sealants or gaskets to remain watertight and airtight; deterioration of glazing materials; or other defects in construction.

.5 The CGSB Standards for Glass and Related Products, GANA Publications: "Glazing Manual" and "Laminated Glass Design Guide", and U.S. Consumer Products Safety Commission CPSC 16 CFR, Part 1201-1982 -Safety Standard for Architectural Glazing Material shall be the reference standards for glass.

.6 Provide fire protection rated laminated glass minimum 8 mm thick, complying with testing requirements in 16 CFR 1201 for Category II materials where installed in a door or frame required to have a fire resistance rating unless noted otherwise. Provide appropriate thicknesses to suit fire ratings indicated.

.7 Glazing Installation: Comply with combined written instructions of manufacturers of glass, sealants, gaskets, and other glazing materials, unless more stringent requirements are indicated, including those in referenced glazing publications.

1.73 **08 83 00 MIRRORS**

.1 Products as scheduled in Section 09 06 00 Legend of Products and Legend of Materials.

.2 Mirrors: 6 mm thick silvered Type 1A Mirror Glazing Quality to CAN/CGSB-12.5 or ASTM C1036-11e1, clear float glass, triple-silvered, electro-copper plated with baked enamel backing.

.3 Installation: Adhere enamel backed mirrors to prepared sealed gypsum board panels (or sealed plywood panels where indicated on drawings) using mirror mastic applied by means of a notched spreader to give continuous ribs ½ inch by 3/8 inch at 1-1/2 inch centers (13 mm x 9 mm at 38 mm centers) or in blobs of approximately 1-1/2 inch (38 mm) diameter at centers to give mastic coverage of not less than 50% of the mirror area.

.1 Mirrors scheduled with safety backing shall be mechanically secured to wall at top and bottom edges with trim or clips as selected by Consultant.

1.74 **08 87 00 GLAZING SURFACE FILMS**

.1 Products as scheduled in Section 09 06 00 Legend of Products and Legend of Materials.

.2 Apply products indicated in patterns as shown on drawings.

.3 Clean glass as recommended by manufacturer prior to application of film. Ensure edges of film are cut neatly and square. Use polyplastic bladed squeegees to ensure removal of excess water from underside of film and to maximize bonding of pressure sensitive adhesive.

.4 Film shall dry flat with no moisture dimples.

.5 Apply film to surface of glass least subject to possible vandalism unless noted otherwise.

.6 Cut glazing film edges straight and square to within 1 mm of edge of glass panel.

.7 Install glazing film edges straight and square a uniform distance of 0.078” (2.0 mm) from edge of glass edge or frame edge where glass is installed in a frame +/- 0.040” (1 mm).

Division 09 FINISHES

1.75 **09 06 00 LEGEND OF PRODUCTS AND LEGEND OF MATERIALS**

.1 This schedule occurs after the end of 01 10 10 Project Requirements.

1.76 **09 21 16 GYPSUM BOARD ASSEMBLIES**

.1 Quality Standard:

.1 CGC Gypsum Construction Handbook.

.2 Gypsum Association, GA-214. Finish levels and as outlined below:

.1 Level 1: Ceiling plenum areas, concealed areas, and where indicated except provide a higher level of finish as required to comply with fire resistance ratings and acoustical ratings.

.2 Level 2: Panels that are substrate backers for tile.

.3 Level 3: Where heavy or medium textured finishes shall be applied.

.4 Level 4: At panel surfaces that will be exposed to view except where Level 5 finish is specified.

.5 Level 5 where indicated on Drawings and where the following finishes are to be installed:

.1 All panel board surfaces where wall coverings including white board wall coverings and vinyl graphics are to be applied.

.2 Writeable wall paint.

.3 All partitions in the following rooms [_____].

.4 All partitions where gloss paints or dark/deep tone paints shall be applied.

.5 All partitions to receive a paint finish located in critical lighting areas such as atriums.

.6 Curved partitions.

.7 Partitions with continuous, unbroken length of 20 feet (6 m).

.8 Horizontal and vertical surfaces of soffits.

.9 Glass scrim faced gypsum board panels.

.2 Fire-Rated Assemblies:

.1 Construct fire resistance rated partitions to the ULC or cUL design indicated.

.2 Assemblies listed and labelled, for fire-protection ratings indicated.

.3 Sheet Steel Block Reinforcing: Minimum 16 gauge galvanized sheet steel reinforcing. Co-ordinate with Consultant and Owner the intended use for blocking

.4 Provide a minimum 1/2 inch (13 mm) deflection connection at underside of structure on partitions from slab to underside of structure above, unless detailed otherwise.

.1 Anchor top track to T-bar with Revoe clips by Revoe Manufacturing Ltd. or fasteners manufactured for this purpose. Do not penetrate or fasten to the exposed face of the ceiling grid system. Install clips as per manufacturer's Instructions and provide clips to suit T-bar grid type and ceiling panel edge.

.2 Thermal Break Tape:

.1 6.4 mm (1/4 inch) thick, self-adhesive, soft, low density closed cell neoprene type tape with acrylic type adhesive on one side.

.2 Acceptable Products and manufacturers:

.1 Permastik 122X by Jacobs and Thompson Ltd.

.2 Arnofoam by Arno Adhesive Tape Incorporated.

.3 Metal Caps:

.1 Formed metal cap, fabricated of extruded aluminum, equal to 6063 T5, with tapered fins prepunched to accept screw fasteners. Provide preformed metal cap profile in maximum lengths, with factory primed corrosion resistant finish; short pieces will not be accepted.

.2 Product:

.1 Softforms Model No. SWC-212-2 manufactured by Pittcon Industries Inc. and supplied by Patry Products Inc., tel.: 416-282-1771 or 416-763-0398.

.4 Metal Trim Corner Bead:

.1 Protect external corners with metal drywall corner bead.

.2 Products: D100 Drywall Corner Bead by Bailey Metal Products Ltd.

.5 Metal Trim Window and Door Jambs:

.1 Use metal drywall trim to finish exposed gypsum board edges or as indicated on Drawings.

.2 Products: Casing “L” or “LC” Trim/Bead, 4411 Channel Trim by Bailey Metal Products Ltd, D200 Metal Drywall L Trim by Bailey Metal Products Ltd, L Trim Molding by Fry Reglet Architectural Metals.

.6 Metal Trim “Z” Shaped Reveal Trim:

.1 Use to create reveals around openings, frames, recessed baseboard or at ceiling and floors as indicated on Drawings

.2 Product: Bailey D-300.

.7 Control Joints: Certified by manufacturer for use at fire resistance rated assemblies.

.1 Products: No. 093 Zinc Control Joint by ClarkDietrich Building Systems, DRM-50-25 2-PC by Fry Reglet Architectural Metals.

.2 Use control joints at 9 m (30 ft) o.c. maximum.

.8 Partition Closure:

.1 Pre-assembled extruded aluminum partition closure with spring loaded mechanism to adjust for a tight fit between vertical junctions of curtain wall and adjacent gypsum board partition.

.2 Fill partition closure with acoustic insulation.

.3 Provide metals free from surface blemishes where exposed to view in finished unit. Surfaces that exhibit pitting, seam marks, roller marks, stains, and discolorations, or other imperfections on finished units are not acceptable.

.4 Exposed Aluminum Finish: Manufacturer’s standard baked acrylic finish or acrylic-polyester powder coat paint in colour to match curtain wall colour and finish. [Field painted by Section 09 91 00 Painting].

.5 Product: Mullion Mate [Series 30] [Series 40] with [Extruded Mullion Mate End Caps [Brake Formed Mullion Mate End Caps] by Gordon Interior Specialties Division, Gordon Inc.

.9 Acoustic Insulation:

.1 Provide batt insulation to fill the full height of stud cavities. Thickness to suit stud sizes and STC required by design. Fit around conduit, electrical boxes and other obstructions with minimal gaps

.2 Mineral-fibre acoustic batt insulation Type 1 to CAN/UC S702 and non-combustible to CAN/ULC S114.

.3 Products:

.1 MinWool Sound Attenuation Fire Batts by Johns Manville.

.2 QuietZone by Owens Corning.

.3 SAFB by Owens Corning.

.4 AFB by Rockwool.

.10 Metal framing supporting horizontal gypsum board panels to be at 16 inches (405 mm) on centre maximum.

.11 Use minimum 25 gauge (0.0179 inches) (0.455 mm) base metal thickness minimum galvanized metal studs unless otherwise indicated.

.12 Use minimum 20 gauge metal framing where tile or stone is installed or glass scrim gypsum board, abuse resistant gypsum board, or impact resistant gypsum board.

.13 Use minimum 20 gauge or heavier gauge metal framing to meet height limitations for L/360 deflection.

.14 Provide steel post reinforcement as indicated in partial height partitions.

.15 Finish all partitions completely smooth to slab where surface mounted base is scheduled.

.16 Fit gypsum board around and seal all penetrations through partitions for ducts, conduits, pipes etc., including partitions above suspended ceilings.

.17 Use glass-mat faced tile backer gypsum board or cement tile backer board in those portions of gypsum board partitions to receive ceramic tile or stone tile finish. Install and finish in conformance with product manufacturer's written installation instructions.

.18 Use paperless glass mat mould resistant gypsum board in partitions indicated with mould resistant gypsum board. Install and finish in conformance with product manufacturer's written installation instructions.

.19 Sound Baffles:

.1 Where indicated on Drawings or in ceiling plenums above ceiling height partitions use non-combustible foil faced rigid insulation for acoustical barriers meeting CAN/ULC S702 Type 1 or ASTM C612 Type IVB.

.2 Laminate two layers of insulation together and laminate foil facing to exposed faces of insulation using suitable adhesive. Foil faces out. Insulation thickness shall match total thickness indicated on Drawings.

.3 Fit insulation and seal all penetrations to provide a continuous smoke tight barrier.

.4 Product: Rockwool RockBoard 80 with foil facing or acceptable equivalent.

.20 Refer to Section 07 84 00 “Firestopping” and Section 07 86 00 “Smoke Seals” for sealing of penetrations in fire rated partitions.

.21 Acoustic Assemblies:

.1 Acoustic Panel Board Products:

.1 Acoustic Gypsum Board: Silent FX Quickcut by CertainTeed.

.2 Acoustical Sealant: Silent FX Noiseproofing Sealant by CertainTeed.

.3 Acoustical Putty: Silent FX Noiseproofing Putty by CertainTeed.

.2 Cut panels to size and to fit around any electrical boxes or openings in the wall, as needed, using a standard hand or power saw.

.3 Prior to closing any partition penetrated by an electrical device box or similar device box, wrap the device box with acoustical putty in accordance with the manufacturer's instructions.

.4 Apply 1/8 inch to 3/8 inch (6 mm to 9 mm) bead of acoustical sealant around panel perimeter (on the edges of the panel) and around electrical boxes before installing next sheet. Install adjacent sheet, "squeezing" the sealant in between them. Apply acoustical sealant around all pipe, conduit or similar penetrations. Remove excess sealant with a rag (any paint thinner easily removes Acoustical Sealant) or putty knife as needed.

.22 Steel Framing:

.1 Install steel framing within 1/8 inch (3 mm) of dimensioned location.

.2 Install each framing member so fastening surfaces vary not more than 1/8 inch (3 mm) from the plane formed by faces of adjacent framing.

.23 Suspension Systems: Install suspension systems that are level to within 1/8 inch (3 mm) in 12 feet (3.6 m) measured lengthwise on each member that will receive finishes and transversely between parallel members that will receive finishes.

.24 Finished Panel Surfaces:

.1 Secure panels to the studs using type 'S' or 'S12' drywall screws at 16 inches (405 mm) o.c. maximum for walls and 12 inches (305 mm) o.c. maximum for ceilings.). Use fine thread screws for metal studs.

.2 Finish securing the panels to the studs with drywall screws. The screw head shall go just below the surface of the paper. Drive screws only enough to dimple the surface. If paper is broken drive another screw nearby.

.3 Maximum of 1/16 inches (1.5 mm) within 12 inches (305 mm) of straight edge for surface flatness

.4 The alignment of accessories with the board panels will not exceed the tolerances specified.

.5 The end joints of accessories will be flush aligned to a maximum offset of 0.019" (0.5 mm).

.6 Completed installation at gypsum board panel joints shall provide an inconspicuous joint. Make transition inconspicuous from a distance of 36 inches (914 mm).

.7 Existing Gypsum Board Surfaces:

.1 Provide an inconspicuous joint between interface of existing plaster and new gypsum board panels.

.2 Provide an inconspicuous joint between interface of existing gypsum board and new gypsum board panels.

.3 Provide inconspicuous patching of holes, gouges, and the like.

.4 Apply required amount of skim coats to make transition and patching inconspicuous from a distance of 36 inches (914 mm).

1.77 **09 22 00 SUPPORTS FOR PLASTERING AND GYPSUM BOARD**

.1 Design the work of this Section to withstand, without permanent deformation and without any detrimental effects on appearance and performance, the effects of all positive and negative axial loads and lateral loads in accordance with the requirements of the Building Code of the Place of the Work.

.1 Maximum allowable deflection of L/360 or L/720 of the span where large format tile, stone or other heavy finishes are applied to wall and a minimum positive and negative pressure of 5 lbf/ ft² (239 Pa).

.2 Comply with the requirements of the Building Code of the Place of Work having jurisdiction in the Place of the Work.

.3 For ceilings requiring a seismic rating:

.1 Design the work of this Section to withstand, without permanent deformation and without any detrimental effects on appearance and performance, the seismic effects expected in the geographical area.

.2 Design shall be based on Limit States Design principles taking into account of all movements, deflections and tolerances, in both permanent and temporary conditions, in order to avoid stress, deformation and failure.

.3 Seismic compression posts to be heavy-duty, telescoping design type with spring steel top clip to minimize vibration and an adjustable self-locking connection, tested and certified to a minimum of 400 kg. Provide posts in sizes as required to withstand the anticipated 30 year probability imposed seismic loads without any detrimental effects on appearance or performance.

.4 Employ a professional structural engineer registered in the province or territory of the Place of the Work to design all the components of the work of this Section requiring structural performance and to be responsible for determining sizes, gauges, spacing, bridging, fasteners, deflection details and framed opening components in accordance with applicable codes, regulations and standards.

1.78 **09 31 00 THIN SET TILING**

.1 Quality Standard:

.1 Specifications Guide 09 30 00 Tile Installation Manual shall be used as the reference standard for tile and stones that have a thickness of less than 3/4 inch (19 mm).

.2 Dimension Stone Guide Volume II by Terrazzo, Tile and Marble Association of Canada shall be used as the reference standard for stones 3/4 inch (19 mm) or greater.

.3 ANSI tile installation standards: Comply with parts of ANSI A108 series "Specifications for Installation of Ceramic Tile" that apply to types of setting and grouting materials and to methods indicated in ceramic tile installation schedules.

.2 Installers shall have a minimum 5 years experience in installations of similar size and scope and be a member in good standing of the TTMAC.

.3 At the beginning of the project, review all rooms where the Product is being installed.

.1 Slope to Drain:

.1 In a room with a floor drain where the floor drain is not at the low point, advise the Consultant immediately. Do not proceed with the Work of this Section until a positive slope to drain has been achieved.

.2 Install mortar bed using medium or thick set mortar to achieve positive slope to drain. Do not use thin set mortar.

.2 Substrate Tolerances: Substrates to receive work of this Section shall have an allowable tolerance for flatness on both vertical or horizontal surfaces of 2mm in 3,000mm.

.3 Installer shall inspect materials before use and ensure any material concerns are dealt with before installation commences.

.4 Coordinate the work of this trade with self-levelling hydraulic cement underlayment application specified under Section 03 54 16 Hydraulic Cement Underlayment

.5 Fill cracks, holes and other defects in existing concrete floors with patching compound. Trowel smooth and level to maximum variation of tolerance of 1/8 inch (3.2 mm) in 10 feet (3000 mm) with surrounding surfaces and allow to dry and set. Prohibit traffic until underlayment has cured.

.6 Movement Joints: Install sealant control joints at movement joints in tile work in accordance with TTMAC Detail 301MJ over control joints, at expansion joints in concrete slabs, at perimeter walls. Obtain Consultant's approval of all movement joints before laying tile. Spacing as follows:

Environment	Minimum Spacing	Maximum Spacing	Minimum Joint Width
Interior Shaded	15'-9" (4,800 mm	20'-0" (6,100 mm)	1/4 inch (6 mm)
Interior Sunlight	7'-10" (2,400 mm)	12'-0" (3,700 mm)	1/4 inch (6 mm)

.7 Waterproofing and Crack-Suppression Membrane: Manufacturer's standard product that complies with ANSI A118.10.

.8 Thin Set Latex-Portland Cement Mortar: ANSI A118.4.

.1 Use rapid setting mortar for installing natural stone, moisture sensitive stone, and large format tile.

.1 Large format tile is defined by the TTMAC as tile with at least one side with a dimension greater than 15 inches (380 mm).

.2 Use sag resistant mortar for installing wall tile.

.3 Use white mortar for installing glass tiles.

.9 Mortar bed Mix for Floors: 1 part Portland cement, 4 parts send, and latex additive where required. When mixed with water the mortar bed shall be of such a consistency and workability that will allow maximum compaction during tamping of the mortar bed, and achieve a minimum compressive strength of 15 MPa after 28 days. A stronger mix can be achieved by adding latex to the water. Adjust water volume depending on moisture content of sand to obtain consistency and workability.

.10 Tile Products:

.1 Refer to the Product and Colour Schedule and the drawings for tile selections, sizes, thicknesses, finishes, locations, patterns, and grout types required.

.2 Stone Flooring and Base: Provide gauged thickness stone products that are free of defects impairing their function for use indicated, including cracks, seams, and starts. Install stone tile and accessories only after other finishing operations, including painting, have been completed.

.11 Back Buttering: Obtain 100% mortar coverage in accordance with applicable requirements for back buttering of tile in referenced TTMAC and ANSI A108 series of tile installation standards for the following applications: Glass tile, exterior tile. tile in wet areas including showers and saunas, tub enclosures, laundries, tile installed with chemical resistant mortars and grouts, tile having tiles 300 mm or larger in any direction, tile having tiles with raised or textured backs, tile having tile installation rated for Heavy or Extra Heavy Duty, porcelain tiles with more than 20% of the tile backs covered with firing release dust back buttered so that 100% of the back is covered with adhesive mortar rated for C627, Extra Heavy Duty rating.

.12 Apply mortars in a unidirectional manner on tile backs and substrates.

.13 Use a tile levelling system to install large format tile.

.14 When installing mosaic tile sheets, cut sheets in half and quarters to commence the off-pattern to hide the appearance of the sheet grid pattern when sheets are installed.

.15 Dry lay stone to determine natural colour and shading range distribution. Obtain Consultant’s acceptance before installing.

.16 Install tiles from multiple boxes / crates to ensure even colour and shading range distribution from different batches.

.17 Crack Suppression Membrane: ANSI A118.10. Install crack suppression membrane over control joints, shrinkage and hairline cracks and “spiderwebbing” cracks in concrete slab. Fill cracks prior to installing membrane. Install membrane before installing hydraulic cement underlayment on the concrete. For cracks 1.6 mm to 3 mm wide apply 2 layers of membrane.

.18 Waterproofing / Crack Suppression Membrane: ANSI A118.10. Install thin-set waterproof membrane below all floor and wall base tile located in toilet rooms and other wet locations. Install thin-set waterproof membrane below all floor and wall tile in shower rooms.

.19 Grouting:

.1 Polymer-modified tile grout: ANSI A118.7, colour as indicated. Mix grout with a latex grout admix in place of water unless manufacturer requires water only.

.1 Use sanded polymer-modified grout at stone installed in wet areas and located on floors, stairs, and ramps unless otherwise scheduled.

.2 Use unsanded polymer-modified grout for tile installed on wall and ceilings unless otherwise scheduled.

.2 Epoxy based tile grout: ANSI A118.3, where noted on drawings, colour as indicated.

.1 Use epoxy grout with stone located in dry areas and for glass mosaics.

.3 Clean grout film. Use a product such as Miracle Sealants GCFR.

.20 Sealing:

.1 Seal stone tile with an impregnating sealer product as recommended by the tile manufacturer and in the Dimension Stone Guide Volume II of the Terrazzo, Tile and Marble Association of Canada.

.1 For polished or honed marble, limestone, or granite use a premium natural look penetrating/impregnating sealer.

.2 For tumbled, antique or slate products use an enhancer sealer or a colour enhancer in addition to a penetrating/impregnating sealer.

.3 Seal stone tile until saturation.

.2 For grout joints use penetrating grout sealer compatible with grout unless sealer is not recommended by manufacturer.

.3 Ensure tile is clean prior to applying sealers.

.21 Protect grout from all contamination until it is fully cured in compliance with manufacturer's written instructions. Any stained, discoloured or contaminated grout is to be replaced at no cost to the Owner.

.1 Acceptable Tile Lippage of Installed Tile:

Tile Type	Tile Size	Joint Width	Allowable Lippage*
Glazed Wall/Mosaics	25 mm x 25 mm to 150 mm to 150 mm	1.5 mm to 3.0 mm	0.78 mm
Quarry	150 mm to 150 mm to 200 mm to 200 mm	6.0 mm or greater	1.56 mm
Pressed Floor/Porcelain	All tile sizes	1.5 mm to less than 6.0 mm	0.78 mm
Pressed Floor/Porcelain	All tile sizes	6.0 mm or greater	1.56 mm
Gauged Porcelain	All tile sizes	2.0 mm to 3.0 mm	0.78 mm

*Values to be added to the actual measured tile warpage. ANSI A137.1 establishes limits for allowable warpage in manufactured tile.

1.79 **09 51 00 ACOUSTICAL CEILINGS**

.1 Products as scheduled in Section 09 06 00 Legend of Products and Legend of Materials.

.2 Quality Standards: Comply with ASTM C635, ASTM C636, and ASTM E580 for ceilings requiring seismic restraint where Place of the Work is in a seismic zone.

.3 Adjust existing suspended ceiling grids and acoustical tile to accommodate new or relocated mechanical and electrical devices and equipment. Provide all necessary components and tile.

.4 Provide finished ceiling system square with adjoining walls and level to within 1/8 inch in 12 feet 0 inches (3 mm in 3600 mm). Maximum deflection of completed ceiling system: 1/360 of span.

.5 Suspension system:

.1 Provide hangers spaced at maximum length of ceiling centers and within 6 inches (150 mm) from ends of main tees and interlock cross tees to main tees to provide rigid assembly. Provide additional ceiling suspension hangers within 6 inches (150 mm) of each corner and at maximum width of ceiling around perimeter of light fixtures and diffusers. Hangers to be minimum 0.150 inch (3.8 mm) galvanized wire.

.2 Support and bracing of new ceiling members to comply with seismic zone provisions of the Place of the Work.

.3 Provide wall moulding to provide correct ceiling height.

.4 Frame at openings for light fixtures, air diffusers, speakers and at changes in ceiling heights.

.6 Acoustical Tiles:

.1 Scribe acoustic units to fit adjacent work and to accommodate mechanical and electrical and other services.

.2 Cut edges and finish with colour matched paint to match factory cut edges where acoustic ceiling tiles are installed in suspension grid. Rebate, and chamfer acoustic units to rest evenly and continuously on the suspension system and perimeter support angles and to match any tegular edging within the field of the ceiling.

.3 Cut edges square at openings for services or penetrations.

.4 Terminate edges at perimeter of acoustic tile ceiling with moulding.

.5 Broken edges are permitted

.6 Provide hold-down clips at acoustical system to hold units tight to grid system within 20 feet 0 inches (6100 mm) of an exterior door and an operable window.

.7 Tie-in to existing ceilings:

.1 Where the new ceiling is adjacent to and a continuation of an existing ceiling:

.1 Provide new components to match existing.

.2 Make integrated transition between existing and new. Disassemble the existing adjacent ceiling system to the extent required to provide a continuous suspension system. Connect grid members at manufactured connection points.

.3 Remove and reinstall mechanical and electrical and other components in the existing ceiling as required to make proper connections between existing and new ceiling system.

.2 Where the new ceiling is visible at the same time as an existing ceiling, but is not a continuation of an existing ceiling align and orientate the new grid with the existing grid unless otherwise noted.

.8 Damage: Where existing ceiling tiles or other components are damaged as a result of the Work, replace the damaged tile or component with new matching Product.

1.80 **09 53 00 ACOUSTICAL CEILING SUSPENSION ASSEMBLIES**

.1 Products as scheduled in Interior Products and Colour Schedule.

.2 Quality Standard: Comply with the requirements of the Building Code having jurisdiction in the Place of the Work, with the Canadian Gypsum Company handbook, with CSA S832 and with ASTM C636/C636M.

.3 For ceilings requiring a seismic rating:

.1 Comply with the requirements of ASTM E580/E580M.

.2 Design the work of this Section to withstand, without permanent deformation and without any detrimental effects on appearance and performance, the seismic effects expected in the geographical area.

.3 Design shall be based on Limit States Design principles taking into account of all movements, deflections and tolerances, in both permanent and temporary conditions, in order to avoid stress, deformation and failure.

.4 Seismic compression posts to be heavy-duty, telescoping design type with spring steel top clip to minimize vibration and an adjustable self-locking connection, tested and certified to a minimum of 400 kg. Provide posts in sizes as required to withstand the anticipated 30-year probability imposed seismic loads without any detrimental effects on appearance or performance.

.5 Employ a professional structural engineer registered in the province or territory of the Place of the Work to design all the components of the work of this Section requiring structural performance and to be responsible for determining sizes, gauges, spacing, bridging, fasteners, deflection details and framed opening components in accordance with applicable codes, regulations and standards.

1.81 **09 65 00 RESILIENT FLOORING**

.1 Resilient flooring and resilient base Products as scheduled in Section 09 06 00 Legend of Products and Legend of Materials.

.2 Follow manufacturer's installation and initial maintenance for commercial areas instructions carefully.

.3 At the beginning of the project, review all rooms where the Product is being installed. In a room with a floor drain where the floor drain is not at the low point, advise the Consultant immediately. Do not proceed with the Work of this Section until a positive slope to drain has been achieved.

.4 Coordinate the work of this trade with self-levelling hydraulic cement underlayment application specified under Section 03 54 16 Hydraulic Cement Underlayment. Product(s) shall be approved by resilient flooring manufacturer for applications indicated.

.5 Fill cracks, holes and other defects in existing concrete floors with patching compound. Trowel smooth and level to maximum variation of tolerance of 1/8 inch (3.2 mm) in 10 feet (3000 mm) with surrounding surfaces and allow to dry and set. Prohibit traffic until underlayment has cured.

.6 Trowelable Levelling and Patching Compounds: Latex-modified, Portland cement based, or blended hydraulic cement-based formulation provided or approved by resilient product manufacturer for applications indicated.

.7 Adhesives: Water-resistant as recommended by manufacturer to suit resilient products and substrate conditions indicated.

.8 Edge Strips: As scheduled, of width shown, of type required to protect exposed edges of tiles or sheet flooring, and in maximum available lengths to minimize running joints.

.9 Field Testing:

.1 Perform field testing to verify that prepared concrete floors are dry and exhibit negative alkalinity or carbonization.

.2 Maximum moisture vapour emission rate 3 lb of water/1000 ft² (1.36 kg of water/100 m²) in a twenty-four (24) hour period or more stringent requirements in accordance with sheet flooring and adhesive manufacturer's written instructions.

.3 Test for moisture vapour transmission in accordance with ASTM F1869.

.4 Relative Humidity Test: Using in situ probes to ASTM F2170. Proceed with installation only after substrates have a maximum 75% relative humidity level measurement.

.5 Test for surface pH. Levels of pH shall not exceed the written recommendations of the flooring manufacturer and adhesive manufacturer. Test in accordance with ASTM F710.

.6 Perform additional moisture tests recommended in writing by adhesive and flooring manufacturer. Proceed with installation only after substrates pass testing.

.10 Prepare substrate surfaces according to manufacturer's written recommendations to ensure adhesion of resilient products. Remove any surface or adhering material including paint, wax, grease, oil, adhesive residues, crayon, pen marking, which may prevent a proper bond or migrate to the surface of the flooring causing discolouration.

.11 Prime all filled or patched areas to manufacturer's written directions. Allow to fully cure prior to applying adhesives.

.12 Adhere flooring Products using a full spread of adhesive applied to substrate to produce a completed installation without open cracks, voids, raising and puckering at joints, telegraphing of adhesive spreader marks, and other surface imperfections.

.13 Immediately after completing resilient flooring installation: remove adhesive and other blemishes from exposed surfaces. Sweep and vacuum surfaces thoroughly. Damp-mop surfaces to remove marks and soil.

.14 Where the resilient flooring is Linoleum, immediately apply two (2) coats of Hi-Mileage by Johnson Diversey or other product recommended by the flooring manufacturer and acceptable to the Consultant.

.15 Install resilient base in conformance with product manufacturer's Installation and Maintenance Instructions. Inside and outside corners shall be tightly fitted, straight, and vertical.

.16 Joints in resilient base shall be tightly fitted, straight and vertical, and not less than 610 mm (24") from corners.

.17 Protect resilient Products from mars, marks, indentations, and other damage from construction operations and placement of equipment and fixtures during remainder of construction period. Use protection methods recommended in writing by manufacturer.

.18 Prior to occupancy, where a manufacturer's initial maintenance instructions for commercial areas recommend sealing and applying a floor finish; seal, finish (wax), and buff the flooring according to the manufacturer's instructions.

1.82 **09 68 00 CARPETING**

.1 Products as scheduled in Section 09 06 00 Legend of Products and Legend of Materials.

.2 Carpet Tiles and Base:

.1 Tile Carpeting: Cushion backed carpet tile for partial direct glue-down installation; install periodic tiles with release-type adhesive; comply with CRI 104, Section 13, "Carpet Modules (Tiles)." Matching carpet base where indicated. 10-year warranty. Product selection for carpet to comply Carpet and Rug Institute's Green Label Plus Indoor Air Quality Test Program.

.2 Sheet Carpeting: Vinyl-backed, broadloom carpet for direct glue-down installation with release-type adhesive; comply with CRI 104, Section 8, "Direct Glue-Down Installation." Matching carpet base where indicated. 10-year warranty. Product selection for carpet to comply Carpet and Rug Institute's Green Label Plus Indoor Air Quality Test Program.

.3 Installer shall be on the manufacturer's list of pre-approved installers and have minimum 3 years experience in Work of this Section.

.4 Furnish 2 (two) year warranty providing coverage against wear, defective materials, and workmanship, issued jointly by carpet manufacturer, Contractor, and installer.

.5 Coordinate the work of this trade with self-levelling hydraulic cement underlayment application specified under Section 03 54 16 Hydraulic Cement Underlayment. Product(s) shall be approved by carpet flooring manufacturer for applications indicated.

.6 Fill cracks, holes and other defects in existing concrete floors with patching compound. Trowel smooth and level to maximum variation of tolerance of 1/8 inch (3.2 mm) in 10 feet (3000 mm) with surrounding surfaces and allow to dry and set. Prohibit traffic until underlayment has cured.

.7 Lay carpet tiles snugly. The length of 10 tiles shall not exceed 10 times the length of an individual tile plus 0.1%. Lay tile in the pattern indicated on the drawings.

.8 Determine moisture emissions from concrete slab using an Anhydrous Calcium Chloride test according to ASTM F1869 test procedures. If moisture emissions exceed 3 pounds per 1,000 square feet (14.65 kg per 1000 m^2) for 24 hours advise Consultant immediately and do not proceed with the installation.

.9 Test all concrete floors for alkalinity by using an alkalinity test kit. If the slab alkalinity level is not between 7.0-9.0 pH advise Consultant immediately and do not proceed with the installation.

.10 Ensure floor is smooth and clean. Where resilient flooring adjoins thicker floor materials, apply underlayment, feathered out to make up difference in level between Products.

.11 Do not install over cut-back adhesive without a full barrier coat.

.12 Refer to manufacturer's instructions for carpet tile installation methods. Prep floor accordingly.

.13 Transition Strips: Manufacturer, type, material and finish as scheduled. Install in accordance with manufacturer's instructions. Height to suit finishes on either side of strip.

.14 Refer to Demolition Section 02 41 20 and cut sheets for carpet recycling instructions.

.15 A special letter of intent (LOI) exists for this project. Do not rely on quantities shown in the LOI. Contractor to verify quantities required to complete all the work shown.

.16 Interface Flooring Systems will review carpet installation. (For Installer's Info.)

.17 Be responsible for proper transportation, handling and storage of carpet tile and adhesive during and after unloading it from the manufacturer's carrier.

1.83 **09 72 00 WALL COVERINGS**

.1 Wall covering: Products as scheduled in Section 09 06 00 Legend of Products and Legend of Materials.

.2 Adhesives: Water based, strippable, as recommended by wall covering manufacturer.

.3 Preparation: Clean substrates of substances that could impair wall covering's bond, including mould, mildew, oil, grease, incompatible primers, and dirt. Prepare substrates to achieve a smooth, dry, clean surface free of flaking, unsound coatings, cracks, and defects. Moisture Content: Maximum of 5 percent on new plaster, concrete and concrete masonry units when tested with an electronic moisture meter. Allow new plaster to cure. Treat areas of high alkalinity. Prime new plaster and gypsum board with primer recommended by wall covering manufacturer. Check painted surfaces for pigment bleeding. Sand gloss, semi-gloss, and eggshell finishes with fine sandpaper.

.4 Where microvented wall covering is used, use breathable primer, sand painted surfaces to increase permeability in accordance with the wall covering manufacturer's instructions.

.5 Acclimatize wall-covering materials by removing them from packaging in the installation areas not less than 24 hours before installation.

.6 Maintain manufacturer's recommended environmental conditions for the recommended duration before and after installation.

.7 Cut panels in roll number sequence. Change run numbers at partition breaks and corners only.

.8 Install seams vertical and plumb, with no horizontal seams.

.9 Match pattern 72 inches (1830 mm) above finish floor.

.10 Remove excess adhesive at finished seams, perimeter edges, and adjacent surfaces using cleaning methods recommended by wall covering manufacturer. Replace strips that cannot be cleaned.

.11 Clean vinyl surfaces using a natural sponge, not a polyester sponge.

1.84 **09 77 00 SPECIAL WALL COVERING**

.1 Products as scheduled in Section 09 06 00 Legend of Products and Legend of Materials.

.2 Preparation of existing surfaces: Clean as required to remove dirt, dust, oil, grease, loose paint, rust, exposed nails and screws, and any other foreign substance which would impair proper bond of new finish. Peeled, chipped, scratched, holes or otherwise

damaged surfaces shall be filled, made good, sanded and repainted to provide perfectly smooth and even surface, with surface texture matching surrounding areas. Prior to the application of special covering.

.3 Install special wall covering to wall in accordance with manufacturer's written instructions.

1.85 **09 84 13 FIXED SOUND-ABSORTIVE PANELS**

.1 Products as scheduled in Section 09 06 00 Legend of Products and Legend of Materials. Colour, edge treatment, trim and finish selection to be from manufacturer's standard range unless otherwise specified.

.2 Provide sound-absorptive panel systems, including all materials and fitments required for the installation of the units in the manner, orientation shown on drawings.

.3 Provide all labour, materials, tools, equipment, and services for sound-absorptive panel systems, including all materials and fitments required for the installation of the units in the manner, orientation and performance shown on drawings, in Section 09 06 00 Legend of Products and Legend of Materials, and specified herein.

.4 Panel sizes to be selected from manufacturer's standard range unless custom perimeter panels are required to meet the dimensions shown. All panels to be the same size except for any custom perimeter panels unless noted otherwise. Custom perimeter panels to be the same size at both ends/top and bottom unless noted otherwise.

.5 Installer qualifications: Engage an installer who has no less than 3 years' experience in installation of systems similar in complexity to those required for this project.

.6 Provide blocking in partitions to support the work in accordance with manufacturer's instructions

.7 Surface preparation: Prior to installation, clean substrate to remove dirt, debris and loose particles. Perform additional preparation procedures as required by manufacturer's instructions.

.8 Protection: Take all necessary steps to prevent damage to material during installation as required in manufacturer's installation instructions

.9 Install the work of this section in accordance with the product manufacturer's \ written installation instructions, using only approved mounting hardware, and locating all components firmly into position, level and plumb.

.10 Immediately upon completion of installation, clean panels and trim in accordance with manufacturer's recommended cleaning method. Remove surplus materials, rubbish and debris resulting from installation as work progresses and upon completion of work.

.11 Protect installed materials to prevent damage by other trades. Use materials that may be easily removed without leaving residue or permanent stains. Immediately before occupancy remove all temporary protection.

1.86 **09 91 00 PAINTING**

.1 Exterior painting: Includes exposed concrete, concrete masonry units (CMU), prime painted and/or galvanized iron and steel, and mechanical and electrical equipment not factory finished. All paint systems require one primer, base coat or filler coat applied in field if not shop-applied. Painting of metal work includes touch-up of factory or shop primed surfaces. Two finish coats are required for exterior painting. All paint products shall comply with MPI standards and be listed in the "MPI Approved Products List."

Preparation and workmanship shall comply with requirements in "MPI Architectural Painting Specification Manual."

.2 Interior Painting: Interior painting includes new and existing mechanical and electrical equipment occurring in finished spaces (electrical panels, piping, ductwork) and exposed undersides of structures and decks as well as walls, doors, hollow metal door frames, and drywall soffits not scheduled to receive other finishes. All paint systems require one primer, base coat or filler coat applied in field if not shop-applied. Painting of metal work includes touch-up of factory- or shop-primed surfaces. Two finish coats are required for interior painting. All paint products shall comply with MPI standards and be listed in the "MPI Approved Products List." Preparation and workmanship shall comply with requirements in "MPI Architectural Painting Specification Manual."

.3 Where one exists, the provincial Painting Contractors Association “Architectural Specification Manual” shall be the reference standard for painting. In the absence of a provincial association, the Master Painters Institute “Architectural Specification Manual” shall be the reference standard for painting.

.4 Use top line of selected manufacturer’s products.

.5 Submit product data from manufacturer for proposed use. Include product designation and grade of each paint type, surface preparation materials and procedures, and product analysis and performance characteristics for each paint type.

.6 Submit duplicate 8 by 10 inch (200 x 250 mm) brush outs for each paint type showing colour and lustre Submit 12 by 12 inch (300 x 300 mm) texture samples on gypsum board backing.

.7 Acceptable Manufacturers:

.1 Sherwin Williams Co.

.2 Where Sherwin Williams Co. is not scheduled: Benjamin Moore and Co., Dulux Paints Inc., or PPG Industries Canada Ltd., or Pratt and Lambert Inc., or The Sherwin Williams Co.

.8 Paint types and sheen as specified below, and colour as scheduled.

.9 Do not thin paint in excess of manufacturer's recommendations.

.10 Apply paint to min. dry film thickness recommended by manufacturer. Match final coat of paint to approved colour.

.11 Provide additional primer coats, or finish coats to conceal exiting finishes or subsurfaces and to achieve continuous coverage and consistent colour.

.12 Prior to any painting being started, prepare a sample room or areas to include the finishing of all materials and surfaces specified and scheduled for the work. The minimum sample area for each material and finish shall be:

.1 Concrete masonry units, concrete and gypsum board – 10 m^2

.2 Hollow metal doors and frames - one (1) door and frame for each finish specified.

.3 Wood doors and frames - one (1) door and frame for each finish specified.

.4 Upon review and approval, sample finishes shall serve as a standard for the balance of the work. Subsequent work carried out and not in the Consultant's opinion equal to the standard shall be repainted without charge.

.13 Preparation of existing surfaces where wall covering has been removed: Examine surfaces and remove remaining adhesive residue which will have a deleterious effect on refinishing. Clean as required to remove dirt, dust, oil, grease, loose paint, rust, exposed nails and screws, and any other foreign substance which would impair proper bond of new finish. Apply one coat of a stain blocking primer. Peeled, chipped, scratched, holes or otherwise damaged surfaces shall be filled, and made good. Apply a skim coat of gypsum board finishing compound, sand and apply a second coat of stain blocking primer. Repaint using two coats of an odour reducing topcoat to provide perfectly smooth and even surface, with surface texture matching surrounding areas.

.14 Preparation of other existing surfaces: Clean as required to remove dirt, dust, oil, grease, loose paint, rust, exposed nails and screws, and any other foreign substance which would impair proper bond of new finish. Peeled, chipped, scratched, holes or otherwise damaged surfaces shall be filled, made good, sanded and repainted to provide perfectly smooth and even surface, with surface texture matching surrounding areas. Treat bare areas as described under preparation for new work in the applicable painting contractors association "Architectural Specification Manual".

.15 Painting of existing surfaces: Repaint existing surfaces, where they are scheduled to be repainted or where the existing finish is damaged due to work of this Contract. Extend new paint finish over full height and/or width of area affected to a corner or straight line as directed by the Consultant. Existing surfaces to be repainted shall receive a minimum of one coat or as many coats as required to completely cover and hide the existing finish to the Consultant's approval. Products and materials used for repainting of existing surfaces shall be similar to those specified for new work, but in each case shall be compatible with substrates and materials to which they are applied.

.16 Touch-ups. Where required to repair damage to finished surfaces, any dents, scratches or gouges shall be sanded and filled as needed and the entire surface where the damage occurred shall be refinished.

.17 Gloss Levels shall be as defined by the Master Painters Institute.

Gloss Level	**Description**	**Gloss at 60 degrees**		**Sheen at 85 degrees**
Gloss Level 1	Traditional matte finish - flat	maximum 5 units	and	maximum 10 units
Gloss Level 2	High side sheen flat - a 'velvet- like' finish	maximum 10 units	and	10-35 units
Gloss Level 3	Traditional 'eggshell-like' finish	10-25 units	and	10-35 units
Gloss Level 4	'Satin-like' finish	20-35 units	and	minimum 35 units
Gloss Level 5	Traditional semi-gloss	35-70 units		
Gloss Level 6	Traditional gloss	70-85 units		
Gloss Level 7	High gloss	more than 85 units		

.18 Exterior Finishes

.1 Galvanized Metal: 1 coat galvanized metal primer, 2 coats acrylic latex enamel, Gloss Level 5 - semi-gloss.

.2 Wood: 1 coat exterior acrylic latex primer, 2 coats exterior acrylic latex house paint, Gloss Level 5 - semi-gloss.

.3 Masonry: 3 coats exterior latex paint Gloss Level 5 - semi-gloss.

.19 Interior Finishes

.1 Galvanized Steel Doors and Galvanized Pressed Steel Frames: 1 coat galvanized metal primer, 2 coats acrylic latex enamel, Gloss Level 5 - semi-gloss.

.2 Metal Wall and Ceiling Surfaces of Modular Vault: 1 coat metal primer2 coats acrylic latex enamel, Gloss Level 3.

.3 Wood Doors: 1 coat primer, 2 coats acrylic latex enamel, Gloss Level 5 - semi-gloss.

.4 Wood Base: 1 coat primer, 2 coats acrylic latex enamel, Gloss Level 5 - semi-gloss.

.5 Convector Covers: 1 coat primer, 2 coats acrylic latex enamel, Gloss Level 5 - semi-gloss.

.6 Galvanized Exposed Steel Deck: Degrease, vinyl wash coat, 1 coat galvanized primer, 2 coats acrylic latex enamel, Gloss Level 5 - semi-gloss.

.7 Shop Primed Exposed Structural Steel Framing: Touch up primer after erection as required. 2 coats acrylic latex enamel, Gloss Level 5 - semi-gloss.

.8 Concrete Walls: 1 coat block filler applied at package consistency, 2 coats acrylic latex enamel, Gloss Level 5 - semi-gloss.

.9 Concrete Masonry Unit Walls: 1 coat block filler applied at package consistency, 2 coats acrylic latex enamel, Gloss Level 5 - semi-gloss.

.10 Gypsum Board:

.1 General Areas:

.1 Walls: 1 coat gypsum board primer 2 coats acrylic latex enamel, Gloss Level 3 – eggshell.

.2 Ceilings: 2 coats acrylic latex enamel, Gloss Level 1 – matte.

.2 Corridors:

.1 Walls: 1 coat gypsum board primer, 2 coats acrylic latex enamel, Gloss Level 3 – eggshell.

.2 Ceilings: 2 coats acrylic latex enamel, Gloss Level 1 – matte.

.3 Storage Areas, Washrooms, Work Rooms, Utility Rooms, Janitors Closets:

.1 Walls: 1 coat gypsum board primer, 2 coats acrylic latex enamel Gloss Level 5 - semi-gloss.

.2 Ceilings: 2 coats acrylic latex enamel, Gloss Level 3 – eggshell.

.11 Paperless Glass Mat Mould Resistant Gypsum Board: Primed in accordance with product manufacturer's written installation instructions. 1 coat 100% acrylic primer with mildewcide, and a minimum of 40% solids by volume, 2 coats acrylic latex enamel, Gloss Level 3 - eggshell.

.12 Concrete Floor Exposed (Janitor's Closet, Entrance Floor Grilles): 1 coat concrete primer, 2 coats urethane acrylic enamel, Gloss Level 6 - gloss.

.20 Electrostatic Finish

.1 After installation of metal fabrications and after all welding has been completed, spot prime all welded areas.

.2 Application of finish coats by an applicator approved by Consultant.

.3 Prepare existing primed surfaces in accordance with manufacturer's instructions. Sand existing primed surfaces or re-prime if necessary.

.4 Apply paint finish in accordance with product manufacturer's written application instructions and as specified herein to achieve a 30 degree gloss factor.

.5 Apply two coats of specified finish to a minimum dry film thickness of 1 to 1.5 mils (0.025 to 0.038 mm) per coat.

.6 Apply each coat into all corners, pinholes, and other difficult areas and ensure full coverage at outside edges and corners.

.7 Before applying second coat allow first coat to dry for at least the period recommended by the coating manufacturer.

.8 Provide a smooth finish, free of laps, sags, runs, pinholes, crawls and skips. Back lap all edges to achieve full coverage.

.21 Surfaces to be painted:

.1 Finish the following surfaces with the types of Products and number of coats specified except as noted in sentence .22 as excluded:

.1 Areas and surfaces indicated in schedules for paint finish, noting that colours may vary from room to room and colours may vary in each room.

.2 Areas and surfaces indicated on drawings for paint finish.

.3 Ferrous metals including ferrous metals used for mechanical and electrical installations.

.4 Except as noted in exclusions below, paint exposed mechanical and electrical materials, and equipment including copper piping, conduit, primed and finish coated surfaces of enclosures and grilles, convector covers, casings, pipes, ducts, plenums, equipment, insulation covering of pipes, ducts and plenums and hangers and metal supporting structures the same colour as the adjacent surfaces. This includes items in electrical and mechanical service rooms, storage areas and closets.

.22 Surfaces to be excluded from painting:

.1 Do not apply paint or any other finish to:

.1 Metals with factory applied finish except as specified to be painted.

.2 Stainless steel.

.3 Aluminum except as specified to be painted.

.4 Finishing hardware except ferrous metal and prime coated items.

.5 Handles for valves.

.6 Specification, instruction plates, and decals on equipment.

.7 ULC, WH, CSA or other rating or certification labels.

.8 Dials, gauges, read outs or sensors.

.9 Shop finished finish carpentry woodwork.

.10 Shop finished architectural woodwork.

.11 Shop finished wood doors.

.12 Pre-painted (epoxy) fire hose cabinets.

.13 Exposed data and communications cabling.

.14 Pre-painted mechanical and electrical materials.

.15 Mechanical and electrical materials finished as part of the mechanical and electrical divisions.

1.87 **09 96 00 HIGH PERFORMANCE COATINGS**

.1 Where one exists, the provincial Painting Contractors Association "Architectural Specification Manual" shall be the reference standard for coatings. In the absence of a provincial association, the Master Painters Institute "Architectural Specification Manual" shall be the reference standard for coatings.

.2 Work of this Section shall be installed by a company who has a minimum of 10 years' experience in successful completion of projects of similar size and design. Employ only qualified installers with proven experience in this type of Work. If the Work of this Section is not installed by the manufacturer, the Work shall be executed by an installer acceptable to the Consultant and approved by the manufacturer of the Products to be used.

.3 Prior to application of high performance coating to exterior and interior exposed surfaces, arrange for the manufacturer's technical representative to examine the surfaces to be finished, and submit a letter to the Consultant verifying that the surfaces have been prepared, the primer recommended, and the environmental conditions are suitable to receive the specified finishes. Arrange for manufacturer's technical representative to inspect the Work and on completion submit written verification of compliance with specifications.

.4 Submit product data from manufacturer for proposed use. Include product designation of each coating type, surface preparation materials and procedures, and product analysis and performance characteristics for each coating type.

.5 Submit duplicate 200 x 250 mm brush outs for each coating type showing colour and lustre, on representative substrate.

.6 Do not thin coatings in excess of manufacturer's recommendations.

.7 Apply coating to minimum dry film thickness recommended by manufacturer. Match final coat of finish to approved colour.

.1 Mockups: Prior to any painting being started, prepare a mockup room or areas to include the finishing of all materials and surfaces specified and scheduled for the work. The minimum sample area for each material and finish shall be:

.1 Previously finished anodize aluminum - 3 linear metres of framing.

.2 Upon review and approval, mockup finishes shall serve as a standard for the balance of the work. Subsequent work carried out and not in the Consultant's opinion equal to the standard shall be repainted without charge.

.2 Upon review and approval, sample finishes shall serve as a standard for the balance of the work. Subsequent work carried out and not in the Consultant's opinion equal to the standard shall be recoated without charge.

.3 Preparation of other existing surfaces: Clean as required to remove dirt, dust, oil, grease, loose paint, rust, exposed nails and screws, and any other foreign substance which would impair proper bond of new finish. Peeled, chipped, scratched, holes, pitted or otherwise damaged surfaces shall be filled, made good, sanded and recoated according to manufacturer's written instructions to provide perfectly smooth and even surface, with surface texture matching surrounding areas. Treat bare areas as described under preparation for new work.

.4 Coating of existing surfaces: Recoat existing surfaces, where they are scheduled to be recoated or where the existing finish is damaged due to work of this Contract. Extend new finish over full height and/or width of area affected to a corner or straight line as directed by the Consultant. Existing surfaces to be recoated shall receive a minimum of two coats or as many coats as required to completely cover and hide the existing finish to the Consultant's approval. Products and materials used for recoating of existing surfaces shall in each case shall be compatible with substrates and materials to which they are applied.

.5 Touch-ups. Where required to repair damage to finished surfaces, any dents, scratches or gouges shall be sanded and filled as needed and the entire surface where the damage occurred shall be refinished.

.6 Gloss Levels shall be as defined by the Master Painters Institute.

Gloss Level	**Description**	**Gloss at 60 degrees**		**Sheen at 85 degrees**
Gloss Level 1	Traditional matte finish - flat	maximum 5 units	and	maximum 10 units
Gloss Level 2	High side sheen flat - a 'velvet- like' finish	maximum 10 units	and	10-35 units

Gloss Level 3	Traditional 'eggshell-like' finish	10-25 units	and	10-35 units
Gloss Level 4	'Satin-like' finish	20-35 units	and	minimum 35 units
Gloss Level 5	Traditional semi-gloss	35-70 units		
Gloss Level 6	Traditional gloss	70-85 units		
Gloss Level 7	High gloss	more than 85 units		

.7 Exterior Finishes

.1 Anodized aluminum

.1 1 coat metal primer

.2 2 coats PPG Coraflon ADS, gloss level 4 - satin

.8 Interior Finishes

.1 Anodized aluminum

.1 1 coat metal primer

.2 2 coats PPG Coraflon ADS, gloss level 4 - satin

.9 Surfaces to be coated:

.1 Finish the following surfaces with the types of Products and number of coats specified except as noted in sentence 22.1 as excluded:

.1 Anodized aluminum (previously finished) doors and windows, door and glazing framing. Refer to product and finishes schedule and drawings.

.2 Areas and surfaces indicated on drawings for high performance coating finish.

Division 10 SPECIALTIES

1.88 **10 11 00 VISUAL DISPLAY UNITS**

.1 Products as scheduled in Section 09 06 00 Legend of Products and Legend of Materials, and as specified herein.

.2 Install products in accordance with product manufacturer’s written instructions.

.3 Install products level and plumb to a tolerance of +/- 1/8 inch (3 mm).

1.89 **10 22 19 DEMOUNTABLE PARTITION**

.1 Products as scheduled in Section 09 06 00 Legend of Products and Legend of Materials.

.2 Work included: Coordinate the supply and furnish labour and other services to complete the installation of the demountable partitions, aluminum door frames, aluminum screen frames, complete with finishing hardware as supplied by the Owner to the extent shown on the drawings and specified herein.

.3 Work of this Section shall be designed, fabricated and installed by a company with a minimum of 10 years' experience in successful completion of projects of similar size and design.

.4 Employ a professional structural engineer registered in the province or territory of the Place of the Work to design all the components of the work of this Section requiring structural performance and to be responsible for determining sizes, gauges, spacing, bridging, fasteners, deflection details and framed opening components.

.5 Provide engineered structural framing with seismic restraint to meet local seismic requirements to support the frameless glass entrances and partitions. Allow for deflection required to ensure proper operation of swinging or sliding doors.

.6 Install battens, glazing stops, other trim and accessories to profiles and Products indicated on drawings and schedules.

.7 Provide engineered structural framing with seismic restraint to meet local seismic requirements to support the frameless glass entrances and partitions. Allow for deflection required to ensure proper operation of swinging or sliding doors.

.8 Positively lock anchoring devices after alignment, to prevent movement other than that designed to accommodate deflection.

.9 Install demountable partitions including door frames, screen frames and all trim in accordance with manufacturer's installation instructions and reviewed shop drawings.

.10 Install demountable partitions plumb, level and square to conform to layout indicated on Drawings. Adjust components for irregularities in adjacent construction.

1.90 **10 22 26 OPERABLE PARTITIONS**

.1 Products as scheduled in Section 09 06 00 Legend of Products and Legend of Materials.

.2 Employ a professional structural engineer registered in the province or territory of the Place of the Work to design all the components of the work of this Section requiring structural performance and to be responsible for determining sizes, gauges, spacing, bridging, fasteners, deflection details and framed opening components.

.3 Shop drawings: Submit the shop drawings in accordance with Section 01 33 23. Indicate the following: system arrangement and component sizes, method of assembly and anchorage.

.4 Provide operable wall of size, profile, STC rating and finishes as indicated and detailed.

.5 Supply and installation to be by a dealer/installer authorized by the manufacturer.

.6 Provide pocket door by operable wall manufacturer. Door to be non-acoustic, 1¾ inch (45 mm) thick, finished to match the operable wall panels.

.7 Where possible, support structure directly from underside of reinforced concrete slab.

.8 Variation in floor level to be ¼ inch in 10 feet (6 mm in 3000 mm) along centerline of wall. Maximum variation across entire opening not to exceed ½ inch (12 mm). Level floor as required meeting these tolerances.

.9 Individual panels not to exceed 42 inches (1065 mm) in width.

.10 Installation to be straight, plumb and level in accordance with the manufacturer's recommendations.

.11 Supply and installation to be by a dealer/installer authorized by the manufacturer.

1.91 **10 26 13 CORNER GUARDS**

.1 Products as scheduled in Section 09 06 00 Legend of Products and Legend of Materials.

.2 Type: Surface mounted.

.3 Material: [Acrovyn] [Type 304 stainless steel].

.4 Size: to later selection by Consultant.

.5 Colour and Finish: to later selection by Consultant.

.6 Install product to wall in accordance with manufacturer's written instructions.

.7 Allow product and adhesive to precondition for a minimum of 24 hours at a temperature between 19 degrees C and 29 degrees C before installation.

.8 Install sheets with texture running in the same direction for uniform appearance.

.9 Adjust installed end caps as necessary to ensure tight seams.

1.92 **10 26 23 PROTECTIVE WALL COVERING**

.1 Products as scheduled in Section 09 06 00 Legend of Products and Legend of Materials.

.2 Fabricate wall protection systems to comply with requirements indicated for design, dimensions, details, finishes and member sizes.

.3 Installer qualifications: Engage an installer who has no less than 3 years' experience in installation of systems similar in complexity to those required for this project.

.4 Submit installation instructions with shop drawings which will indicate manufacturer's recommended methods of installation.

.5 Deliver materials to the project site in unopened original factory packaging clearly labelled to show manufacturer.

.6 Provide blocking in partitions to support the work in accordance with manufacturer's instructions.

.7 Surface preparation: Prior to installation, clean substrate to remove dirt, debris and loose particles. Use patching compound to achieve a flat (3 mm in 3000 mm) substrate surface. Perform additional preparation procedures as required by manufacturer's instructions.

.8 Protection: Take all necessary steps to prevent damage to material during installation as required in manufacturer's installation instructions.

.9 Install the work of this section in accordance with the product manufacturer's written instructions, using only approved adhesives, and locating all components firmly into position, level, plumb, rigid and having no voids. Install sheets with texture running in the same direction for uniform appearance.

.10 Immediately upon completion of installation, clean guards and accessories in accordance with manufacturer's recommended cleaning method. Remove surplus materials, rubbish and debris resulting from installation as work progresses and upon completion of work.

.11 Protect installed materials to prevent damage by other trades. Use materials that may be easily removed without leaving residue or permanent stains.

1.93 **10 28 13 TOILET ACCESSORIES**

.1 Products as scheduled in Section 09 06 00 Legend of Products and Legend of Materials.

.2 Work included: Furnish labour, Products and other services to complete the fabrication and installation of the barrier free washroom accessories and framed mirror.

.3 Supply for installation under other Sections, mounting devices and reinforcement required to be built-in for support of grab bars and imposed loads. Be responsible for giving proper notice to other Sections and supplying such reinforcement when required by other Sections

.4 Refer to Section 09 06 00 Legend of Products and Legend of Materials for acceptable manufacturers and models.

.5 Provide Signage for Emergency Push Button in Universal Washroom to Comply with the Building Code in the Place of Work.

.1 CM-SE21A Sign by Camden Door Controls

.6 Provide accessories for the Work from one manufacturer.

.1 Toilet and bath accessories, including rolled toilet tissue dispenser, liquid-soap dispensers, grab rails for disability access, mirror units, soap dish, under lavatory guards, and custodial accessories including utility shelves and mop/broom holders.

.2 Provide and secure accessories rigidly in place.

.1 Stud walls: Provide steel back-plate to stud prior to plaster or gypsum board finish. Provide plate with threaded studs or plugs.

.2 Hollow masonry units or existing plaster or gypsum board: Use toggle bolts drilled into cell/wall cavity.

.3 Solid masonry, marble, stone or concrete: Use bolt with lead expansion sleeve set into drilled hole.

.4 Toilet partitions: Use male/female through bolts.

.3 Provide grab bars on built-in anchors, support or carrier recommended by bar manufacturer.

.4 Use tamper proof screws/bolts for fasteners.

.7 Fill units with necessary supplies shortly before Substantial Performance.

1.94 **10 99 00 MANUFACTURED SPECIALTIES**

.1 Products as scheduled in Section 09 06 00 Legend of Products and Legend of Materials.

.2 Provide additional reinforcing as required, fastenings, and anchorage required for building in of products.

.3 Supplier shall provide information and templates required for installation of work of this Section, and assist or supervise, or both, the setting of anchorage devices, and construction of other work incorporated with products specified in this Section in order that they function as intended.

.4 Install work to meet manufacturer's recommended specifications, true, tightly fitted, and level or flush to adjacent surfaces, as suitable for installation.

.5 Verify that installed products function to the satisfaction of the Consultant and adjust them accordingly to ensure satisfactory operation.

Division 11 EQUIPMENT

1.95 **11 31 13 RESIDENTIAL KITCHEN APPLIANCES AND ACCESSORIES**

.1 Products as scheduled in Section 09 06 00 Legend of Products and Legend of Materials.

.2 Supply and installation of appliances as scheduled. Work shall include complete installation of appliances specified.

.3 Installation of appliances shall be performed only by skilled installers, operating all adequate and necessary equipment to perform the Work in accordance with the respective product manufacturer's written installation instructions and recognized standards. Installers shall have minimum five (5) years' experience in installing specified Products and shall have successfully completed minimum of five (5) projects of similar scope and complexity.

.4 Unwrap appliances and set them in place, level and firm, in locations as indicated on Drawings. Install the appliances true to dimensions, square, plumb, level and free from distortion or defects detrimental to appearance and performance

.5 Secure built-in appliances to adjacent Work as recommended by manufacturer and in manner to prevent appliances from vibrating or working loose under expected service conditions.

.6 Check test appliances to ensure they are in perfect working order. Ensure proper operation. Repair and/or replace defective appliances as directed by the Consultant.

.7 Provide a written parts and labour warranty for one (1) year from substantial performance.

Division 12 FURNISHINGS

1.96 **12 24 13 ROLLER WINDOW SHADES**

.1 Products per Appendix B ProMark Specifications and Quotation.

.2 Chainless operated roller shades with fabric.

.3 Motorized roller shades with fabric. Operation shall be through the lighting control system. Refer to electrical and audio-visual drawings for line and low voltage requirements, roller shade controllers and switching locations.

.4 Roller shade fabrics to be flame resistant tested to pass NFPA 701 or CAN/ULC-S109 when tested by an independent testing and inspection agency acceptable to authorities having jurisdiction.

.5 Employ the subcontractors specified by the Owner for all window treatment work.

.6 Inspect conditions where Product is to be installed and make recommendations where adverse conditions exist.

.7 Roller shades shall be mounted in front of mullions and fastened to the underside of ceiling or bulkhead. Provide suitable anchors to support the roller shades from the ceiling or bulkhead.`

.8 Do not penetrate window mullions with fasteners.

.9 Install roller shades in accordance with manufacturer's installations and reviewed shop drawings. Minimize light gaps between roll down blinds. Ensure proper operation.

.10 Erect Work true to dimensions, square, plumb, level and free from distortion or defects.

.11 Shade cloth to be permanently flame-retardant, non-shrink, non-fading, and PVC free.

.12 Ensure shade cloth hangs flat, without buckling or distortion. All unguided roller shades must roll true and straight without shifting sideways more than 1/8 inch (3 mm) in either direction.

.13 Warrant roller shades to be free of manufacturing defects and fabric to be free from any deterioration due to exposure to heat and light.

1.97 **12 36 16 STAINLESS STEEL COUNTERTOPS**

.1 Type 304 and Type 304L alloy as required, minimum 1.6 mm (0.063 inch) thick.

.2 Moisture Resistant, Medium Density Fibreboard (MRMDF) to ANSI A208.2, Grade 130-MR50, 19 mm thick, free of urea formaldehyde resins.

.3 Fabricate stainless steel countertops with 1.6 mm thick stainless steel sheet bonded to 19 mm thick MRMDF with contact adhesive. Seal underside of core with waterproof sealing coat. Buildup out edges of countertops with solid wood strips to a thickness of 32 mm.

.4 Stainless steel exposed in the finished stainless countertop work shall have Excelsior Stainless Steel Polishing "XL Blend "S" Directional Satin Polished Finish". Refinish exposed edges after fabrication. When polishing is completed, passivate and rinse surfaces. Remove embedded foreign matter and leave surfaces chemically clean.

.5 Grain direction shall be horizontal, unless indicated otherwise.

.6 Protect finish with removable protective film.

Trillium Architectural Products Ltd.
1 Prince Andrew Place
Toronto, ON, Canada
M3C 2H2

416-391-5555
www.trillium.group

Project#: P000060291

SCHEDULE OF FINISHING HARDWARE
FOR
WLU ~ WATERLOO CAMPUS FACULTY OF EDUCATION
75 UNIVERSITY AVE W
FL. 7
WATERLOO, ON, N2L 3C5
CANADA

PROJECT CONSULTANT: GEOFF MAINPRIZE, AHC/CDC gmainprize@trillium.group
HARDWARE DETAILER: JOHN MAINPRIZE jmainprize@trillium.group

Start Date: 01-Oct-2026
Revised: 29-Oct-2026 Issued for Tender.

DRAFT

Finish Code	BMHA Code	Description
BSP	BSP	Black Suede Powder Coat, Sprayed
C10	612	Satin Bronze, Clear Coated
C10B*	613*	Dark Oxidized Satin Bronze, Oil Rubbed*
C14	618	Bright Nickel Plated, Clear Coated
C15	619	Satin Nickel Plated, Clear Coated
C19	622	Flat Black Coated
C20	623	Light Oxidized Statuary Bronze, Clear Coated
C20	690	Dark Bronze Painted
C20A	624	Dark Oxidized Statuary Bronze, Clear Coated
C20D	624	Dark Statuatory Bronze, Clear Coat
C26	625	Bright Chromium Plated
C26D	626	Satin Chromium Plated
C27	627	Satin Aluminum, Clear Coated
C28 or AL	628	Satin Alumnium, Clear Anodized
C28 or AL	689	Aluminum Painted
C2G	603	Zinc Plated
C2G	603	Zinc Plated
C3	605	Bright Brass, Clear Coated
C3	605	Bright Brass, Clear Coated
C32	629	Bright Stainless Steel
C32D	630	Satin Stainless Steel
C4	606	Satin Brass, Clear Coated
C4	606	Satin Brass, Clear Coated
C5	609	Satin Brass, Blackened, Satin Relieved, Clear Coated
C5	609	Satin Brass, Blackened, Satin Relieved, Clear Coated
C9	611	Bright Bronze, Clear Coated
C9	611	Bright Bronze, Clear Coated
CP	600	Primed For Painting
CP	600	Primed For Painting
EAD	EAD	Brass Painted
EB	EB	Dark Bronze Painted
ED	ED	Black Painted
EN	EN	Aluminum Painted
K29	K29	Black Anodized Aluminum
K40	K40	Dark Bronze Aluminum
WSP	WSP	White Suede Powder Coat, Sprayed

*This finish will vary in colour from item to item and will wear according to use.

Note: The base material (brass, bronze, steel, aluminium) determines which finishes are available (eg, aluminium finishes are only available on products made of aluminium)

LEGEND OF ABBREVIATIONS

ALD	Aluminum Door
ALF	Aluminum Frame
DA	Double Acting
DE	Double Egress
DMNT	Demountable
F	Flush
FG	Full Glass
FG2	Full Glass with Midrail
FRMLS	Frameless
GLD	Glass Door
HG	Half Glass
HMD	Hollow Metal Door
HMF	Hollow Metal Frame
LH	Left Hand
LH-DA	Left Hand Double Acting
LHR	Left Hand Reverse
LHRA	Left Hand Reverse Active
LL	Lead Lined
NL	Narrow Lite
NL2	Double Narrow Lite
Nom. Height	Door height prior to undersizing for hardware and clearances
Nom. Width	Door width prior to undersizing for hardware and clearances
OS	Opposing Swing
PHTM	Phantom Door
PR	Pair
PT	Paint
Rebate Height	Exact measurement from underside of header to bottom of frame
Rebate Width	Exact measurement from frame jamb to frame jamb
RH	Right Hand
RH-DA	Right Hand Double Acting
RHR	Right Hand Reverse
RHRA	Right Hand Reverse Active
SGL	Single
SLD	Sliding
SS	Stainless Steel
TRR	Temperature Rise Rated
V	Vision Lite
VNR	Veneer
WD	Wood Door
WDF	Wood Frame

1 SGL DOOR L703B **OFFICE** **LHR**

38in x 106in x 1 3/4in
FRAME TYPE: 01
DOOR TYPE: FN
WD / WDF

4	EACH	CONCEALED BEARING HINGE	TA714 4.5 X 4 C26D
1	EACH	MARKS STOREROOM LOCKSET	F21-175F 26D F86
1	EACH	CYLINDER	BASE BUILDING KEYWAY
1	EACH	KEYING	GMK TO BUILDING SYSTEM
1	EACH	CONCEALED OVERHEAD STOP	1-336 630
25	FEET	DOOR GASKET	6216 1/8in X 3/8in BLACK

1 SGL DOOR L704 **OFFICE**

FRAME TYPE: 02
DOOR TYPE: TG3
ALD / ALF
NOTE:
ALL HARDWARE BY ALUMINUM SUPPLIER; EXCEPT ADD THE FOLLOWING:

1	EACH	CYLINDER	BASE BUILDING KEYWAY
1	EACH	KEYING	GMK TO BUILDING SYSTEM

1 SGL DOOR L710 CLASSROOM RH

42in x 108in x

FRAME TYPE: 02

DOOR TYPE: TG3

ALD / ALF

NOTE:

ALL HARDWARE BY ALUMINUM SUPPLIER; EXCEPT ADD THE FOLLOWING:

1	EACH	CARD READER BY WLU SECURITY BY OTHERS	BY WILFRED LAURER UNIVERSITY SECURITY
1	EACH	CYLINDER	BASE BUILDING KEYWAY
1	EACH	KEYING	GMK TO BUILDING SYSTEM
1	EACH	ELECTRIC STRIKE	5000C 630
1	EACH	BARRIER FREE WASHROOM CONTROL KIT	KIT INCLUDES: CM-AF500, CM-400/8, CX-MDC, CX-33, 2 x CM-45/4, CX-MDC, CX-33, CX-WC11
1	EACH	INSTALL ELECTRIC STRIKE	FRAME CUTOUT NOT INCLUDED
1	EACH	AUTOMATIC OPERATOR INSTALLATION	POWER, BLOCKING, DEVICE BOXES AND PULL STRINGS BY OTHERS
1	EACH	LOW VOLTAGE WIRING FOR ADO COMPONENTS	PULL STRINGS BY OTHERS
1	EACH	AUTOMATIC OPERATOR	8100 51-CL-IS-PULL
1	EACH	24VAC FUSED TRANSFORMER 40VA	CX-TRX-4024
1	EACH	RECTIFIER OUTPUT BOARD	CX-PS13V3
1	EACH	DOOR CONTACT SWITCH BY WLU SECURITY BY OTHERS	DOOR CONTACT SWITCH BY WILFRED LAURER UNIVERSITY SECURITY

DRAFT

1 SGL DOOR L720 **CLASSROOM** **LHR**

42in x 108in x

FRAME TYPE: 02

DOOR TYPE: TG3

ALD / ALF

NOTE:

ALL HARDWARE BY ALUMINUM SUPPLIER; EXCEPT ADD THE FOLLOWING:

1	EACH	CARD READER BY WLU SECURITY BY OTHERS	BY WILFRED LAURER UNIVERSITY SECURITY
1	EACH	CYLINDER	BASE BUILDING KEYWAY
1	EACH	KEYING	GMK TO BUILDING SYSTEM
1	EACH	ELECTRIC STRIKE	5000C 630
1	EACH	BARRIER FREE WASHROOM CONTROL KIT	KIT INCLUDES: CM-AF500, CM-400/8, CX-MDC, CX-33, 2 x CM-45/4, CX-MDC, CX-33, CX-WC11
1	EACH	INSTALL ELECTRIC STRIKE	FRAME CUTOUT NOT INCLUDED
1	EACH	AUTOMATIC OPERATOR INSTALLATION	POWER, BLOCKING, DEVICE BOXES AND PULL STRINGS BY OTHERS
1	EACH	LOW VOLTAGE WIRING FOR ADO COMPONENTS	PULL STRINGS BY OTHERS
1	EACH	AUTOMATIC OPERATOR	8100 51-CL-OS-PUSH
1	EACH	24VAC FUSED TRANSFORMER 40VA	CX-TRX-4024
1	EACH	RECTIFIER OUTPUT BOARD	CX-PS13V3
1	EACH	DOOR CONTACT SWITCH BY WLU SECURITY BY OTHERS	DOOR CONTACT SWITCH BY WILFRED LAURER UNIVERSITY SECURITY

1 SGL DOOR L723 **GN WC** **LH**

36in x 94in x 1 3/4in

FRAME TYPE: 01

DOOR TYPE: F

WD / HMF

4	EACH	CONCEALED BEARING HINGE	TA714 4.5 X 4 C26D
1	EACH	INDICATOR BOLT	D271 626
1	EACH	MARKS PASSAGE LEVERSET	195N 26D F75
1	EACH	CONCEALED CLOSER	3133 LH 689
1	EACH	WALL STOP	GSH 240B C26D
25	ROLL	DOOR GASKET	S88BL 25FT

1 SGL DOOR L725 **GN WC** **RH**

36in x 94in x 1 3/4in
FRAME TYPE: 01
DOOR TYPE: F
WD / HMF

4	EACH	CONCEALED BEARING HINGE	TA714 4.5 X 4 C26D
1	EACH	INDICATOR BOLT	D271 626
1	EACH	MARKS PASSAGE LEVERSET	195N 26D F75
1	EACH	CONCEALED CLOSER	3133 RH 689
1	EACH	WALL STOP	GSH 240B C26D
25	ROLL	DOOR GASKET	S88BL 25FT

1 SGL DOOR L727 **GN WC** **RH**

36in x 94in x 1 3/4in
FRAME TYPE: 01
DOOR TYPE: F
WD / HMF

4	EACH	CONCEALED BEARING HINGE	TA714 4.5 X 4 C26D
1	EACH	INDICATOR BOLT	D271 626
1	EACH	MARKS PASSAGE LEVERSET	195N 26D F75
1	EACH	CONCEALED CLOSER	3133 RH 689
1	EACH	WALL STOP	GSH 240B C26D
25	ROLL	DOOR GASKET	S88BL 25FT

1 SGL DOOR L729 **GN WC** **RH**

36in x 94in x 1 3/4in
FRAME TYPE: 01
DOOR TYPE: F
WD / HMF

4	EACH	CONCEALED BEARING HINGE	TA714 4.5 X 4 C26D
1	EACH	INDICATOR BOLT	D271 626
1	EACH	MARKS PASSAGE LEVERSET	195N 26D F75
1	EACH	CONCEALED CLOSER	3133 RH 689
1	EACH	WALL STOP	GSH 240B C26D
25	ROLL	DOOR GASKET	S88BL 25FT

1 SGL DOOR L733 **STORAGE** **LHR**

38in x 94in x 1 3/4in

FRAME TYPE: 01

DOOR TYPE: F

WD / HMF

4	EACH	CONCEALED BEARING HINGE	TA714 4.5 X 4 C26D
1	EACH	CARD READER BY WLU SECURITY BY OTHERS	BY WILFRED LAURER UNIVERSITY SECURITY
1	EACH	MARKS STOREROOM LOCKSET	F21-175F 26D F86
1	EACH	CYLINDER	BASE BUILDING KEYWAY
1	EACH	KEYING	GMK TO BUILDING SYSTEM
1	EACH	ELECTRIC STRIKE	5000C 630
1	EACH	DOOR CLOSER	1431 PS EN - SURFACE MOUNTED
1	ROLL	DOOR GASKET	S88BL 25FT
1	EACH	DOOR CONTACT SWITCH BY WLU SECURITY BY OTHERS	DOOR CONTACT SWITCH BY WILFRED LAURER UNIVERSITY SECURITY

1 SGL DOOR L736 **PROJECT/THESIS DEFENSE ROOM LH**

42in x 108in x

FRAME TYPE: 02

DOOR TYPE: TG3

ALD / ALF

NOTE:

ALL HARDWARE BY ALUMINUM SUPPLIER; EXCEPT ADD THE FOLLOWING:

1	EACH	CARD READER BY WLU SECURITY BY OTHERS	BY WILFRED LAURER UNIVERSITY SECURITY
1	EACH	CYLINDER	BASE BUILDING KEYWAY
1	EACH	KEYING	GMK TO BUILDING SYSTEM
1	EACH	ELECTRIC STRIKE	5000C 630
1	EACH	DOOR CONTACT SWITCH BY WLU SECURITY BY OTHERS	DOOR CONTACT SWITCH BY WILFRED LAURER UNIVERSITY SECURITY

1 SGL DOOR L737 **UNIVERSAL WASHROOM** **LH**

38in x 94in x 1 3/4in

FRAME TYPE: 01

DOOR TYPE: F

WD / HMF

4	EACH	CONCEALED BEARING HINGE	TA714 4.5 X 4 C26D
1	EACH	MARKS STOREROOM LOCKSET	F21-175F 26D F86
1	EACH	CYLINDER	BASE BUILDING KEYWAY
1	EACH	KEYING	GMK TO BUILDING SYSTEM
1	EACH	ELECTRIC STRIKE	5000C 630
1	EACH	UNIVERSAL WASHROOM ILLUMINATED CONTROL KIT	KIT INCLUDES: CX-WEC10, CX-WC13AXSM, CX-TRX-4024, CX-PS13v3, CM-45/4, CM-45/45SE1, CM-45/85SE1, CX-MDC, CX-33
1	EACH	INSTALL ELECTRIC STRIKE	FRAME CUTOUT NOT INCLUDED
1	EACH	AUTOMATIC OPERATOR INSTALLATION	POWER, BLOCKING, DEVICE BOXES AND PULL STRINGS BY OTHERS
1	EACH	LOW VOLTAGE WIRING FOR ADO COMPONENTS	PULL STRINGS BY OTHERS
1	EACH	AUTOMATIC OPERATOR	8100 51-CL-IS-PULL
1	EACH	WALL STOP	GSH 240B C26D
1	ROLL	DOOR GASKET	S88BL 25FT
1	EACH	DOOR CONTACT SWITCH BY WLU SECURITY BY OTHERS	DOOR CONTACT SWITCH BY WILFRED LAURER UNIVERSITY SECURITY

1 SGL DOOR L738 **GN WC** **RH**

36in x 94in x 1 3/4in

FRAME TYPE: 01

DOOR TYPE: F

WD / HMF

4	EACH	CONCEALED BEARING HINGE	TA714 4.5 X 4 C26D
1	EACH	INDICATOR BOLT	D271 626
1	EACH	MARKS PASSAGE LEVERSET	195N 26D F75
1	EACH	CONCEALED CLOSER	3133 RH 689
1	EACH	WALL STOP	GSH 240B C26D
25	ROLL	DOOR GASKET	S88BL 25FT

1 SGL DOOR L739 **BF GN WC** **LH**

38in x 94in x 1 3/4in

FRAME TYPE: 01

DOOR TYPE: F

WD / HMF

4	EACH	CONCEALED BEARING HINGE	TA714 4.5 X 4 C26D
1	EACH	MARKS STOREROOM LOCKSET	F21-175F 26D F86
1	EACH	CYLINDER	BASE BUILDING KEYWAY
1	EACH	KEYING	GMK TO BUILDING SYSTEM
1	EACH	ELECTRIC STRIKE	5000C 630
1	EACH	BARRIER FREE WASHROOM CONTROL KIT	KIT INCLUDES: CM-AF500, CM-400/8, CX-MDC, CX-33, 2 x CM-45/4, CX-MDC, CX-33, CX-WC11
1	EACH	INSTALL ELECTRIC STRIKE	FRAME CUTOUT NOT INCLUDED
1	EACH	AUTOMATIC OPERATOR INSTALLATION	POWER, BLOCKING, DEVICE BOXES AND PULL STRINGS BY OTHERS
1	EACH	LOW VOLTAGE WIRING FOR ADO COMPONENTS	PULL STRINGS BY OTHERS
1	EACH	AUTOMATIC OPERATOR	8100 51-CL-IS-PULL
1	EACH	24VAC FUSED TRANSFORMER 40VA	CX-TRX-4024
1	EACH	RECTIFIER OUTPUT BOARD	CX-PS13V3
1	EACH	WALL STOP	GSH 240B C26D
1	ROLL	DOOR GASKET	S88BL 25FT
1	EACH	DOOR CONTACT SWITCH BY WLU SECURITY BY OTHERS	DOOR CONTACT SWITCH BY WILFRED LAURER UNIVERSITY SECURITY

DRAFT

1 SGL DOOR L740 **SCIENCE CLASSROOM** **LHR**

42in x 108in x

FRAME TYPE: 02

DOOR TYPE: TG3

ALD / ALF

NOTE:

ALL HARDWARE BY ALUMINUM SUPPLIER; EXCEPT ADD THE FOLLOWING:

1 EACH	CARD READER BY WLU SECURITY BY OTHERS	BY WILFRED LAURER UNIVERSITY SECURITY
1 EACH	CYLINDER	BASE BUILDING KEYWAY
1 EACH	KEYING	GMK TO BUILDING SYSTEM
1 EACH	ELECTRIC STRIKE	5000C 630
1 EACH	BARRIER FREE WASHROOM CONTROL KIT	KIT INCLUDES: CM-AF500, CM-400/8, CX-MDC, CX-33, 2 x CM-45/4, CX-MDC, CX-33, CX-WC11
1 EACH	INSTALL ELECTRIC STRIKE	FRAME CUTOUT NOT INCLUDED
1 EACH	AUTOMATIC OPERATOR INSTALLATION	POWER, BLOCKING, DEVICE BOXES AND PULL STRINGS BY OTHERS
1 EACH	LOW VOLTAGE WIRING FOR ADO COMPONENTS	PULL STRINGS BY OTHERS
1 EACH	AUTOMATIC OPERATOR	8100 51-CL-OS-PUSH
1 EACH	24VAC FUSED TRANSFORMER 40VA	CX-TRX-4024
1 EACH	RECTIFIER OUTPUT BOARD	CX-PS13V3
1 EACH	DOOR CONTACT SWITCH BY WLU SECURITY BY OTHERS	DOOR CONTACT SWITCH BY WILFRED LAURER UNIVERSITY SECURITY

---

1 SGL DOOR L742 **OFFICE**

FRAME TYPE: 02

DOOR TYPE: TG3

ALD / ALF

NOTE:

ALL HARDWARE BY ALUMINUM SUPPLIER; EXCEPT ADD THE FOLLOWING:

1 EACH	CYLINDER	BASE BUILDING KEYWAY
1 EACH	KEYING	GMK TO BUILDING SYSTEM

---

1 SGL DOOR L743 **DEANS OFFICE**

FRAME TYPE: 02

DOOR TYPE: TG3

ALD / ALF

NOTE:

ALL HARDWARE BY ALUMINUM SUPPLIER; EXCEPT ADD THE FOLLOWING:

1 EACH	CYLINDER	BASE BUILDING KEYWAY
1 EACH	KEYING	GMK TO BUILDING SYSTEM

---

1 SGL DOOR L744 **OFFICE**

FRAME TYPE: 02

DOOR TYPE: TG3

ALD / ALF

NOTE:

ALL HARDWARE BY ALUMINUM SUPPLIER; EXCEPT ADD THE FOLLOWING:

1 EACH CYLINDER	BASE BUILDING KEYWAY
1 EACH KEYING	GMK TO BUILDING SYSTEM

1 SGL DOOR L745 **DEANS OFFICE**

FRAME TYPE: 02

DOOR TYPE: TG3

ALD / ALF

NOTE:

ALL HARDWARE BY ALUMINUM SUPPLIER; EXCEPT ADD THE FOLLOWING:

1 EACH CYLINDER	BASE BUILDING KEYWAY
1 EACH KEYING	GMK TO BUILDING SYSTEM

1 SGL DOOR L746 **OFFICE**

FRAME TYPE: 02

DOOR TYPE: TG3

ALD / ALF

NOTE:

ALL HARDWARE BY ALUMINUM SUPPLIER; EXCEPT ADD THE FOLLOWING:

1 EACH CYLINDER	BASE BUILDING KEYWAY
1 EACH KEYING	GMK TO BUILDING SYSTEM

DRAFT

1 SGL DOOR L750A **ART CLASSROOM** **RHR**

42in x 108in x

FRAME TYPE: 02

DOOR TYPE: TG3

ALD / ALF

NOTE:

ALL HARDWARE BY ALUMINUM SUPPLIER; EXCEPT ADD THE FOLLOWING:

1	EACH	CARD READER BY WLU SECURITY BY OTHERS	BY WILFRED LAURER UNIVERSITY SECURITY
1	EACH	CYLINDER	BASE BUILDING KEYWAY
1	EACH	KEYING	GMK TO BUILDING SYSTEM
1	EACH	ELECTRIC STRIKE	5000C 630
1	EACH	BARRIER FREE WASHROOM CONTROL KIT	KIT INCLUDES: CM-AF500, CM-400/8, CX-MDC, CX-33, 2 x CM-45/4, CX-MDC, CX-33, CX-WC11
1	EACH	INSTALL ELECTRIC STRIKE	FRAME CUTOUT NOT INCLUDED
1	EACH	AUTOMATIC OPERATOR INSTALLATION	POWER, BLOCKING, DEVICE BOXES AND PULL STRINGS BY OTHERS
1	EACH	LOW VOLTAGE WIRING FOR ADO COMPONENTS	PULL STRINGS BY OTHERS
1	EACH	AUTOMATIC OPERATOR	8100 51-CL-OS-PUSH
1	EACH	24VAC FUSED TRANSFORMER 40VA	CX-TRX-4024
1	EACH	RECTIFIER OUTPUT BOARD	CX-PS13V3
1	EACH	DOOR CONTACT SWITCH BY WLU SECURITY BY OTHERS	DOOR CONTACT SWITCH BY WILFRED LAURER UNIVERSITY SECURITY

1 PAIR OF DOORS L750B **ART CLASSROOM** **LHR/RHR**

2/ 30in x 106in x 1 3/4in

FRAME TYPE: 01

DOOR TYPE: F

WD / WDF

8	EACH	CONCEALED BEARING HINGE	TA714 4.5 X 4 C26D
2	EACH	MARKS DUMMY SET	195DO 26D
2	EACH	HOLD OPEN DOOR CLOSER	161BF x TPH with 160Pcover 689
25	FEET	DOOR GASKET	6216 1/8in X 3/8in BLACK

1 PAIR OF DOORS L750C **ART CLASSROOM** **LHR/RHR**

2/ 30in x 106in x 1 3/4in
FRAME TYPE: 01
DOOR TYPE: F
WD / WDF

8	EACH	CONCEALED BEARING HINGE	TA714 4.5 X 4 C26D
2	EACH	MARKS DUMMY SET	195DO 26D
2	EACH	HOLD OPEN DOOR CLOSER	161BF x TPH with 160Pcover 689
25	FEET	DOOR GASKET	6216 1/8in X 3/8in BLACK

1 SGL DOOR L760 **STUDENT OFFICE** **LH**

42in x 108in x
FRAME TYPE: 02
DOOR TYPE: TG3
ALD / ALF

NOTE:
ALL HARDWARE BY ALUMINUM SUPPLIER; EXCEPT ADD THE FOLLOWING:

1	EACH	CARD READER BY WLU SECURITY BY OTHERS	BY WILFRED LAURER UNIVERSITY SECURITY
1	EACH	CYLINDER	BASE BUILDING KEYWAY
1	EACH	KEYING	GMK TO BUILDING SYSTEM
1	EACH	ELECTRIC STRIKE	5000C 630
1	EACH	DOOR CONTACT SWITCH BY WLU SECURITY BY OTHERS	DOOR CONTACT SWITCH BY WILFRED LAURER UNIVERSITY SECURITY

1 SGL DOOR L764 **OFFICE**

FRAME TYPE: 02
DOOR TYPE: TG3
ALD / ALF

NOTE:
ALL HARDWARE BY ALUMINUM SUPPLIER; EXCEPT ADD THE FOLLOWING:

1	EACH	CYLINDER	BASE BUILDING KEYWAY
1	EACH	KEYING	GMK TO BUILDING SYSTEM

1 SGL DOOR L765 **OFFICE**

FRAME TYPE: 02
DOOR TYPE: TG3
ALD / ALF
NOTE:
ALL HARDWARE BY ALUMINUM SUPPLIER; EXCEPT ADD THE FOLLOWING:

1 EACH CYLINDER	BASE BUILDING KEYWAY
1 EACH KEYING	GMK TO BUILDING SYSTEM

1 SGL DOOR L766 **OFFICE**

FRAME TYPE: 02
DOOR TYPE: TG3
ALD / ALF
NOTE:
ALL HARDWARE BY ALUMINUM SUPPLIER; EXCEPT ADD THE FOLLOWING:

1 EACH CYLINDER	BASE BUILDING KEYWAY
1 EACH KEYING	GMK TO BUILDING SYSTEM

1 SGL DOOR L767 **OFFICE**

FRAME TYPE: 02
DOOR TYPE: TG3
ALD / ALF
NOTE:
ALL HARDWARE BY ALUMINUM SUPPLIER; EXCEPT ADD THE FOLLOWING:

1 EACH CYLINDER	BASE BUILDING KEYWAY
1 EACH KEYING	GMK TO BUILDING SYSTEM

DRAFT

1 SGL DOOR L768 **STORAGE** **LH**

38in x 106in x 1 3/4in

FRAME TYPE: 01

DOOR TYPE: FN

WD / WDF

4	EACH	CONCEALED BEARING HINGE	TA714 4.5 X 4 C26D
1	EACH	CARD READER BY WLU SECURITY BY OTHERS	BY WILFRED LAURER UNIVERSITY SECURITY
1	EACH	MARKS STOREROOM LOCKSET	F21-175F 26D F86
1	EACH	CYLINDER	BASE BUILDING KEYWAY
1	EACH	KEYING	GMK TO BUILDING SYSTEM
1	EACH	ELECTRIC STRIKE	5000C 630
1	EACH	DOOR CLOSER	1431 UO EN - SURFACE MOUNTED
1	EACH	CONCEALED OVERHEAD STOP	1-336 630
25	FEET	DOOR GASKET	6216 1/8in X 3/8in BLACK
1	EACH	DOOR CONTACT SWITCH BY WLU SECURITY BY OTHERS	DOOR CONTACT SWITCH BY WILFRED LAURER UNIVERSITY SECURITY

1 SGL DOOR L769 **OFFICE**

FRAME TYPE: 02

DOOR TYPE: TG3

ALD / ALF

NOTE:

ALL HARDWARE BY ALUMINUM SUPPLIER; EXCEPT ADD THE FOLLOWING:

1	EACH	CYLINDER	BASE BUILDING KEYWAY
1	EACH	KEYING	GMK TO BUILDING SYSTEM

1 SGL DOOR L770 **OFFICE**

FRAME TYPE: 02

DOOR TYPE: TG3

ALD / ALF

NOTE:

ALL HARDWARE BY ALUMINUM SUPPLIER; EXCEPT ADD THE FOLLOWING:

1	EACH	CYLINDER	BASE BUILDING KEYWAY
1	EACH	KEYING	GMK TO BUILDING SYSTEM

1 SGL DOOR L772 **TEAM ROOM** **RH**

42in x 108in x

FRAME TYPE: 02

DOOR TYPE: TG3

ALD / ALF

NOTE:

ALL HARDWARE BY ALUMINUM SUPPLIER; EXCEPT ADD THE FOLLOWING:

1 EACH	CARD READER BY WLU SECURITY BY OTHERS	BY WILFRED LAURER UNIVERSITY SECURITY
1 EACH	CYLINDER	BASE BUILDING KEYWAY
1 EACH	KEYING	GMK TO BUILDING SYSTEM
1 EACH	ELECTRIC STRIKE	5000C 630
1 EACH	DOOR CONTACT SWITCH BY WLU SECURITY BY OTHERS	DOOR CONTACT SWITCH BY WILFRED LAURER UNIVERSITY SECURITY

---

1 SGL DOOR L774 **OFFICE**

FRAME TYPE: 02

DOOR TYPE: TG3

ALD / ALF

NOTE:

ALL HARDWARE BY ALUMINUM SUPPLIER; EXCEPT ADD THE FOLLOWING:

1 EACH	CYLINDER	BASE BUILDING KEYWAY
1 EACH	KEYING	GMK TO BUILDING SYSTEM

---

1 SGL DOOR L776 **OFFICE**

FRAME TYPE: 02

DOOR TYPE: TG3

ALD / ALF

NOTE:

ALL HARDWARE BY ALUMINUM SUPPLIER; EXCEPT ADD THE FOLLOWING:

1 EACH	CYLINDER	BASE BUILDING KEYWAY
1 EACH	KEYING	GMK TO BUILDING SYSTEM

DRAFT

1 SGL DOOR L778 **OFFICE**

FRAME TYPE: 02

DOOR TYPE: TG3

ALD / ALF

NOTE:

ALL HARDWARE BY ALUMINUM SUPPLIER; EXCEPT ADD THE FOLLOWING:

1 EACH	CYLINDER	BASE BUILDING KEYWAY
1 EACH	KEYING	GMK TO BUILDING SYSTEM

1 SGL DOOR L780 **OFFICE**

FRAME TYPE: 02

DOOR TYPE: TG3

ALD / ALF

NOTE:

ALL HARDWARE BY ALUMINUM SUPPLIER; EXCEPT ADD THE FOLLOWING:

1 EACH	CYLINDER	BASE BUILDING KEYWAY
1 EACH	KEYING	GMK TO BUILDING SYSTEM

1 SGL DOOR L781 **STAFF LOUNGE** **RH**

42in x 108in x

FRAME TYPE: 02

DOOR TYPE: TG3

ALD / ALF

NOTE:

ALL HARDWARE BY ALUMINUM SUPPLIER; EXCEPT ADD THE FOLLOWING:

1 EACH	CARD READER BY WLU SECURITY BY OTHERS	BY WILFRED LAURER UNIVERSITY SECURITY
1 EACH	CYLINDER	BASE BUILDING KEYWAY
1 EACH	KEYING	GMK TO BUILDING SYSTEM
1 EACH	ELECTRIC STRIKE	5000C 630
1 EACH	DOOR CONTACT SWITCH BY WLU SECURITY BY OTHERS	DOOR CONTACT SWITCH BY WILFRED LAURER UNIVERSITY SECURITY

1 SGL DOOR L782 **OFFICE**

FRAME TYPE: 02
DOOR TYPE: TG3
ALD / ALF
NOTE:
ALL HARDWARE BY ALUMINUM SUPPLIER; EXCEPT ADD THE FOLLOWING:

1 EACH CYLINDER	BASE BUILDING KEYWAY
1 EACH KEYING	GMK TO BUILDING SYSTEM

1 SGL DOOR L783 **OFFICE**

FRAME TYPE: 02
DOOR TYPE: TG3
ALD / ALF
NOTE:
ALL HARDWARE BY ALUMINUM SUPPLIER; EXCEPT ADD THE FOLLOWING:

1 EACH CYLINDER	BASE BUILDING KEYWAY
1 EACH KEYING	GMK TO BUILDING SYSTEM

1 SGL DOOR L784 **OFFICE**

FRAME TYPE: 02
DOOR TYPE: TG3
ALD / ALF
NOTE:
ALL HARDWARE BY ALUMINUM SUPPLIER; EXCEPT ADD THE FOLLOWING:

1 EACH CYLINDER	BASE BUILDING KEYWAY
1 EACH KEYING	GMK TO BUILDING SYSTEM

1 SGL DOOR L785 **OFFICE**

FRAME TYPE: 02
DOOR TYPE: TG3
ALD / ALF
NOTE:
ALL HARDWARE BY ALUMINUM SUPPLIER; EXCEPT ADD THE FOLLOWING:

1 EACH CYLINDER	BASE BUILDING KEYWAY
1 EACH KEYING	GMK TO BUILDING SYSTEM

1 SGL DOOR L786 **OFFICE**

FRAME TYPE: 02
DOOR TYPE: TG3
ALD / ALF
NOTE:
ALL HARDWARE BY ALUMINUM SUPPLIER; EXCEPT ADD THE FOLLOWING:

1 EACH CYLINDER	BASE BUILDING KEYWAY
1 EACH KEYING	GMK TO BUILDING SYSTEM

1 SGL DOOR L787 **OFFICE**

FRAME TYPE: 02
DOOR TYPE: TG3
ALD / ALF
NOTE:
ALL HARDWARE BY ALUMINUM SUPPLIER; EXCEPT ADD THE FOLLOWING:

1 EACH CYLINDER	BASE BUILDING KEYWAY
1 EACH KEYING	GMK TO BUILDING SYSTEM

1 SGL DOOR L788 **OFFICE**

FRAME TYPE: 02
DOOR TYPE: TG3
ALD / ALF
NOTE:
ALL HARDWARE BY ALUMINUM SUPPLIER; EXCEPT ADD THE FOLLOWING:

1 EACH CYLINDER	BASE BUILDING KEYWAY
1 EACH KEYING	GMK TO BUILDING SYSTEM

1 SGL DOOR L789 **OFFICE**

FRAME TYPE: 02
DOOR TYPE: TG3
ALD / ALF
NOTE:
ALL HARDWARE BY ALUMINUM SUPPLIER; EXCEPT ADD THE FOLLOWING:

1 EACH CYLINDER	BASE BUILDING KEYWAY
1 EACH KEYING	GMK TO BUILDING SYSTEM

1 SGL DOOR L790 **OFFICE**

FRAME TYPE: 02

DOOR TYPE: TG3

ALD / ALF

NOTE:

ALL HARDWARE BY ALUMINUM SUPPLIER; EXCEPT ADD THE FOLLOWING:

1 EACH	CYLINDER	BASE BUILDING KEYWAY
1 EACH	KEYING	GMK TO BUILDING SYSTEM

1 SGL DOOR L791 **OFFICE**

FRAME TYPE: 02

DOOR TYPE: TG3

ALD / ALF

NOTE:

ALL HARDWARE BY ALUMINUM SUPPLIER; EXCEPT ADD THE FOLLOWING:

1 EACH	CYLINDER	BASE BUILDING KEYWAY
1 EACH	KEYING	GMK TO BUILDING SYSTEM

1 SGL DOOR L792 **OFFICE**

FRAME TYPE: 02

DOOR TYPE: TG3

ALD / ALF

NOTE:

ALL HARDWARE BY ALUMINUM SUPPLIER; EXCEPT ADD THE FOLLOWING:

1 EACH	CYLINDER	BASE BUILDING KEYWAY
1 EACH	KEYING	GMK TO BUILDING SYSTEM

DRAFT

1 SGL DOOR L793 **MAIL/COPY** **RH**

38in x 106in x 1 3/4in

FRAME TYPE: 01

DOOR TYPE: FN

WD / WDF

4	EACH	CONCEALED BEARING HINGE	TA714 4.5 X 4 C26D
1	EACH	CARD READER BY WLU SECURITY BY OTHERS	BY WILFRED LAURER UNIVERSITY SECURITY
1	EACH	MARKS STOREROOM LOCKSET	F21-175F 26D F86
1	EACH	CYLINDER	BASE BUILDING KEYWAY
1	EACH	KEYING	GMK TO BUILDING SYSTEM
1	EACH	ELECTRIC STRIKE	5000C 630
1	EACH	DOOR CLOSER	1431 UO EN - SURFACE MOUNTED
1	EACH	FLOOR STOP	GSH209 C26D
25	FEET	DOOR GASKET	6216 1/8in X 3/8in BLACK
1	EACH	DOOR CONTACT SWITCH BY WLU SECURITY BY OTHERS	DOOR CONTACT SWITCH BY WILFRED LAURER UNIVERSITY SECURITY

1 SGL DOOR L794 **DUO ROOM**

FRAME TYPE: 02

DOOR TYPE: TG3

ALD / ALF

NOTE:

ALL HARDWARE BY ALUMINUM SUPPLIER; EXCEPT ADD THE FOLLOWING:

1	EACH	CYLINDER	BASE BUILDING KEYWAY
1	EACH	KEYING	GMK TO BUILDING SYSTEM

1 SGL DOOR L796 **OFFICE**

FRAME TYPE: 02

DOOR TYPE: TG3

ALD / ALF

NOTE:

ALL HARDWARE BY ALUMINUM SUPPLIER; EXCEPT ADD THE FOLLOWING:

1	EACH	CYLINDER	BASE BUILDING KEYWAY
1	EACH	KEYING	GMK TO BUILDING SYSTEM

1 SGL DOOR L7STA STAIR RHR

EXISTING / EXISTING

NOTE:

EXISTING TO REMAIN; EXCEPT ADD THE FOLLOWING:

1 EACH	RIM EXIT DEVICE	12-8804J ETL C32D
1 EACH	CYLINDER	BASE BUILDING KEYWAY
1 EACH	KEYING	GMK TO BUILDING SYSTEM
1 EACH	EXISTING BY OTHERS	REUSE EXISTING

DRAFT

25.62113.00 - Legend of Materials

TORONTO ON

	Code	Description	Spec Sections	BOD Manufacturer	BOD Product	Finish
1	ACF-01	ACOUSTICAL CEILING FINISH	098100 Sound Control Finish 098150 Acoustic Plaster System	International Cellulose Corp.	Sonaspray "FC" Acoustic Ceiling Spray	White
2	ACT-01	ACOUSTIC CEILING TILE	095100Acoustical Panel Ceilings	Rockfon	Sonar Lay-In. SQ, 15/16", 2x6	White
3	ACT-02	ACOUSTIC CEILING TILE	095100Acoustical Panel Ceilings	Rockfon	Sonar Lay-In. SQ, 15/16", 2x2	White
4	AP-01	ACCESS PANEL	083113Access Doors and Frames	TBD	Square Corner, Pop-out panel, sized to suit locations	White
5	CG-01	CORNER GUARD [RESERVED]	102600Wall and Door Protection	-	-	-
6	CG-02	CORNER GUARD	102600Wall and Door Protection	Tarkett/Johnsonite	3/4" Corner Guard VGB-08-B	Snowbound W TG1
7	CH-01	HARDWARE - LOWER CAB MILLWORK PULLS	113100Appliances and Equipment	Richelieu	9696 Modern Aluminum Edge Pull, 40mm	Chrome
8	CH-02	HARDWARE - TALL MILLWORK CAB PULLS	113100Appliances and Equipment	Richelieu	9898 Modern Aluminum Edge Pull, 436mm	Chrome
9	CH-03	HARDWARE - BOH PULLS	113100Appliances and Equipment	Richelieu	2365 Modern Metal Pull, 177mm	Brushed Nickel
10	CH-04	HARDWARE - RECEPTION DESK HINGE	113100Appliances and Equipment	Richelieu	4.5" Full Mortise Adjustable spring Hinge	Chrome
11	CH-05	HARDWARE- RECEPTION DESK LATCH	113100Appliances and Equipment	Contractor's choice	Magnetic lock and stop door latch *Provide options for designer approval	Chrome
12	CH-06	HARDWARE- GLASS DOOR HINGE	113100Appliances and Equipment	Richelieu	Surface mounted hinge 75348140	Chrome
13	CH-07	HARDWARE- GLASS DOOR LOCK	113100Appliances and Equipment	Richelieu	Double door cabinet lock For glass BP641712140	chrome
14	CH-08	[RESERVED]	113100Appliances and Equipment			
15	CH-09	HARDWARE - POWER MODULE	113100Appliances and Equipment	MOCKETT	PCS124C/UNMT - Undermount Power Dock	Black
16	CH-10	HARDWARE - GROMMETT	113100Appliances and Equipment	RICHELIEU	Rectangular aluminum grommet PC2040I3005	Aluminum
17	CPT-01	CARPETING - MAIN TILE	096800Carpeting	Mohawk	Faculty Renewal, 24x24, Ashlar installation, Ecoflex One Backing	726 Exit Glacier
18	CPT-02	CARPETING - MAIN TILE	096800Carpeting	Mohawk	Faculty Renewal, 24x24, Ashlar installation, Ecoflex One Backing	374 Maripose Grove
19	CPT-03	CARPETING - MAIN TILE	096800Carpeting	Mohawk	Faculty Renewal, 24x24, Ashlar installation, Ecoflex One Backing	937 Harding Icefield
20	DMTF-01	DECORATIVE METAL MESH DIVIDER WALL	057000Decorative Metal	Contractor Choice	Perforated Metal Panel, 1/4" thickness	Powder Coat to Match PT-01, Magnetic Paint-Semi gloss
21	DP-01	DEMOUNTABLE PARTITION	102219Demountable Partitions	Teknion	Altos- Double Glazed Doors (STC 39) and Double Glazed Partition (STC 46), 12mm Tempered Clear Glass	Anodized aluminum
22	FAB-01	FABRIC	064000Architectural Woodwork	Kvadrat	Sahco - Clifford	0370
23	FAB-02	FABRIC	064000Architectural Woodwork 097713 Stretched-Fabric Wall Systems 097723Fabric-Wrapped Panels	Designtex	Helsinki Crypton 3105-802	Pewter
24	GF-01	GLAZING FILM - FIELD	088100Decorative Glazing	Solyx	SXJ-0718 Dual Etched Gradient 60"H	Dual Etch Gradient
25	GF-02	GLAZING FILM - CLASSROOM	088100Decorative Glazing	Solyx	SXJ-0720 Etched Gradient 71"H AFF	Single Etch Gradient
26	GF-03	GLAZING FILM - FHC CABINET	088100Decorative Glazing	3M	7725-324. Film entire cabinet glass with FHC Letters behind a void in film	Clear Dusted Crystal
27	GF-04	GLAZING FILM - RECEPTION	088100Decorative Glazing	Solyx	SX-9060 Ribbed Glass Frosted	
28	GLP-01	GLASS PANELING	088330Glass Paneling	Contractors Choice	Tempered Glass 12mm Thick	
29	GLP-02	GLASS PANELING	088330Glass Paneling	Contractors Choice	Tempered Glass 10mm Thick	
30	LQ-01	LACQUER / LACQUER PANEL	064000Architectural Woodwork	Contractors Choice	To match PL02 Octolam 1127GP Sky Blue *Provide sample for designer approval	
31	MCP-01	MELAMINE	064000Architectural Woodwork	Contractors Choice	Contractor Choice	White Finish
32	MTL-01	METAL	057000 Decorative Metal	Contractors Choice	304 Food safe grade Stainless Steel, 16Ga.	Stainless Steel
33	MTL-02	METAL	057000 Decorative Metal	Contractors Choice	304 Food safe grade Stainless Steel, 20Ga.	Stainless Steel
34	OP-01	OPERABLE PARTITION	102226Operable Panel Partitions 102228Vertically Folding Partitions	Corflex	5600 Series (to include pass-through door with ADA compliant push/pull door hardware)	Track: Anodized Metal Trim and Gasket: White Colour: Formica pearl 934-58 and porcelain writeable surface. (Writable surface to be 3'-0"AFF @ 4'-0"H band)
35	PL-01	PLASTIC LAMINATE	064000Architectural Woodwork	Abet Laminati	Abet Laminati Plastic Laminate	1851 Verde Mela
36	PL-02	PLASTIC LAMINATE	064000Architectural Woodwork	Octolam	Octolam Solid Colour Smooth Laminate	1127GP Sky Blue
37	PL-03	PLASTIC LAMINATE	064000Architectural Woodwork	Wilsonart	Tuscan Walnut Wood Laminate	7921-38 Tuscan Walnut
38	PL-04	PLASTIC LAMINATE	064000Architectural Woodwork	Abet Laminati	Abet Laminati Plastic Laminate	411 Sei/Bianco
39	PL-05	PLASTIC LAMINATE	064000Architectural Woodwork	Chemetal	Stainless Steel Plastic Laminate	Brushed Aluminum 902
40	PT-01	PAINT - INTERIOR	099100Painting	Benjamin Moore	OC-45 Swiss Coffee	Eggshell
41	PT-02	PAINT - INTERIOR	099100Painting	Benjamin Moore	2071-10 Exotic Purple	Eggshell

	Code	Description	Spec Sections	BOD Manufacturer	BOD Product	Finish
42	PT-03	PAINT - INTERIOR	099100Painting	Benjamin Moore	2112-50 Stormy Monday	Eggshell
43	PT-05	PAINT - INTERIOR	099100Painting	Benjamin Moore	2061-60 Little Boy Bluey	Eggshell
44	PT-06	PAINT - INTERIOR	099100Painting	Benjamin Moore	904 White Blush	Eggshell
45	PT-07	PAINT - INTERIOR	099100Painting	Benjamin Moore	HC-169 Coventry Grey	Eggshell
46	PT-09	SPECIALTY PAINT - FHC	099100Painting	Benjamin Moore	1139 Harbour Highlands Tan	Eggshell
47	PT-10	SPECIALTY PAINT - ENTRY	099100Painting	Benjamin Moore	1139 Harbour Highlands Tan	Eggshell
48	PT-11	SPECIALTY PAINT - PERIMETER HEATERS	099100Painting	Pro Industrial	Must be primed with Pro-Cryl Primer. Surface preparation: SSPC-SP2. 2x Topcoat Acrolon-100 EG Shel. Colour to match adjacent walls. .	Colour to match adjacent walls.. 2 coats required
49	PT-12	SPECIALTY PAINT -	099100Painting	Scuffmaster	Solid Metal SM9699	Solid Metal SM9699
50	RF-01	RUBBER RESILIENT FLOORING	096500Resilient Flooring and Accessories	Mohawk Group	Hero Rubber Flooring - Nike Grind Axis 8mm - rolled good	738 Alabaster
51	RF-02	RUBBER RESILIENT FLOORING	096500Resilient Flooring and Accessories	Mohawk Group	Hero Rubber Flooring - Nike Grind Vitality 8mm - rolled good	739 Dove
52	RFB-01	RESILIENT BASE	096500Resilient Flooring and Accessories	Johnsonite	Mandalay MW-XX-H 4 1/2"H	Snowbound W TG1
53	RFB-02	RESILIENT BASE	096500Resilient Flooring and Accessories	Johnsonite	Mandalay MW-XX-H 4 1/2"H	White Slipper VN1
54	RFB-03	RESILIENT BASE	096500Resilient Flooring and Accessories	Johnsonite	Mandalay MW-XX-H 4 1/2"H	Snow White 01
55	RFB-04	RESILIENT BASE	096500Resilient Flooring and Accessories	Johnsonite	Mandalay MW-XX-H 4 1/2"H	Burnt Umber B
56	RFB-05	RESILIENT BASE	096500Resilient Flooring and Accessories	Johnsonite	Mandalay MW-XX-H 4 1/2"H	Rusty Nail TA7
57	RFB-06	RESILIENT BASE	096500Resilient Flooring and Accessories	Johnsonite	Mandalay MW-XX-H 4 1/2"H	Colonial Grey CG
58	RFB-07	RESILIENT BASE	096500Resilient Flooring and Accessories	Johnsonite	Mandalay MW-XX-H 4 1/2"H	Mt Rainier
59	RFB-08	RESILIENT BASE	096500Resilient Flooring and Accessories	Johnsonite	Mandalay MW-XX-H 4 1/2"H	Zephyr CB
60	RS-01	RESIN PANEL	088330Glass Paneling	3Form	Chroma 1"	Tide B40 Vellum F04
61	RS-01	RESIN PANEL	064000Architectural Woodwork	3Form	Chroma 1"	Vellum F04
62	TL-01	FLOOR TILE	093000Tiling	Daltile	Outlander OU57 Sterling Porcelain Tile, 24" x 48"	Sterling Medio Stepwise, Matte
63	TL-02	WALL TILE	093000Tiling	Anatolia	Purity Ceramic Tile, 3" x 12"	Breeze, Glossy
64	TS-01	TRANSITION STRIP - RF TO CARPET	096500Resilient Flooring and Accessories	Tarkett/Johnsonite	Metal Edge ME-003	179 Steel
65	TS-02	TRANSITION STRIP - RF TO TILE	096500Resilient Flooring and Accessories	Schluter	Reno-TK	Polished Chrome
66	TS-03	[RESERVED]	096500Resilient Flooring and Accessories	-	-	
67	TS-04	TRANSITION STRIP - TILE TO PAINT	096500Resilient Flooring and Accessories	Schluter	Schiene	Polished Chrome
68	VDS-01	BULLETIN BOARD - TACKBOARD	101100Visual Display Surfaces	Forbo	Bulletin board with white slim metal frame surround	2206 Oyster Shell
69	VDS-02	BULLETIN BOARD - TACKBOARD	101100Visual Display Surfaces	Forbo	Bulletin board with white slim metal frame surround	2187 Brown Rice
70	VDS-03	BULLETIN BOARD - TACKBOARD	101100Visual Display Surfaces	Forbo	Bulletin board with white slim metal frame surround	2182 Potato Skin
71	VDS-04	BULLETIN BOARD - TACKBOARD	101100Visual Display Surfaces	Forbo	Bulletin board with white slim metal frame surround	2209 Black Olive
72	WC-01	WOOD WALL COVERING	097200Wall Coverings	Koroseal	AA0911 Wood Wallcovering	Red Birch, Flat Cut
73	WC-02	FELT WALL COVERING -	097200Wall Coverings	Designtex	3mm Wannabe Rib Wallcovering	5622-101 Gull
74	WC-03	FELT WALL COVERING -	097200Wall Coverings	Interior Felt	3mm Wool Felt Wallcovering	271 Sierra Brown
75	WC-04	FELT WALL COVERING -	097200Wall Coverings	Zintra	20mm rib Emboss Panel Corduroy Fine	Pebble
76	WT-01	WINDOW TREATMENT - Manual Shades	122413Roller Window Shades	Promark	Contact manufacturer, van@promarkwindowfilm.com for specification	1012 1% 2S
77	WT-02	WINDOW TREATMENT - Motorized Shades	122413Roller Window Shades	Promark	Contact manufacturer, van@promarkwindowfilm.com for specification	1012 1% 2S

25.62113.00 - Legend of Products

TORONTO ON

	Code	Description Main	BOD Manufacturer	BOD Product
1	EQ-01	APPLIANCE - MICROWAVE & TRIM	Panasonic	Panasonic Countertop NN-ST67KSC C/W 24" Trim Kit NNTK612G (Supplied & install by GC)
2	EQ-02	EQUIPMENT - GARBAGE/RECYCLING	Hafele	VS Envi Space XX Pro Bin, 15-1/2" W x 15-1/2" D, (Owner supplied, installed by GC)
3	EQ-03	APPLIANCE - KETTLE	-	(Owner supplied and install)
4	EQ-04	APPLIANCE - FRIDGE	FRIGIDAIRE	FRBG1224AV Garage Ready Bottom Freezer, (Supplied & install by GC)
5	EQ-05	APPLIANCE - BEVERAGE COOLER	FRIGIDAIRE	Frigidaire 144 Can Beverage Center (Owner supplied and install)
6	EQ-06	APPLIANCE - COFFEE	-	(Owner supplied and install)
7	EQ-07	EQUIPMENT - WHITE BOARD	Contractor Choice	Ceramic Steel Whiteboard (anti-ghosting material), Standard White with slim Stainless Steel Trim, magnetic finish
8	EQ-08	EQUIPMENT - SHRED BIN	Iron Mountain	(Owner supplied and install)
9	EQ-09	APPLIANCE - TOASTER	-	(Owner supplied and install)
10	EQ-10	EQUIPMENT - PRINTER	-	(Owner supplied and install)
11	PF-01	PLUMBING EQUIPMENT	Elkay	Lustertone Single Bowl Undermount ADA Sink w/ Perfect Drain, stainless steel, 20-1/2" x 16-1/2" x 5-3/8"
12	PF-01	PLUMBING EQUIPMENT	Elkay	Lustertone Single Bowl Undermount ADA Sink w/ Perfect Drain, stainless steel, 20-1/2" x 16-1/2" x 5-3/8"
13	PF-02	PLUMBING FIXTURE	Delta	Trinsic Touch2o Bar/Prep Faucet with Touchless Technology, chrome finish, 13" H x 6.5"D
14	PF-02	PLUMBING FIXTURE	Delta	Trinsic Touch2o Bar/Prep Faucet with Touchless Technology, Polished Chrome, 13" H x 6.5"D
15	PF-03	PLUMBING EQUIPMENT	Sloan	AD-81000 BASYS Aer-dec 1 Station Sink, 4" Caesarstone Quartz, Laminate wood Base, 30"W x 34"H x 23"D
16	PF-03	PLUMBING EQUIPMENT	Sloan	AD-81000 BASYS Aer-dec 1 Station Sink, 4" Caesarstone Quartz, Laminate wood Base, 30"W x 34"H x 23"D
17	PF-04	PLUMBING FIXTURE	Sloan	Basys EFX-200 Hardwired-Powered Deck-Mounted Mid Body Faucet, Polished Chrome
18	PF-04	PLUMBING FIXTURE	Sloan	Basys EFX-200 Hardwired-Powered Deck-Mounted Mid Body Faucet, Polished Chrome
19	PF-07	PLUMBING EQUIPMENT	American Standard	Afwall Millenium Top Spud Elongated Wall-Hung Bowl, white finish, 14"W x 26"D 14"H
20	PF-07	PLUMBING EQUIPMENT	American Standard	Afwall Millenium Top Spud Elongated Wall-Hung Bowl, white finish, 14"W x 26"D 14"H
21	PF-08	PLUMBING EQUIPMENT	American Standard	Selectronic Touchless Toilet Flush Valve, 16"H, Polished Chrome
22	PF-08	PLUMBING EQUIPMENT	American Standard	Selectronic Touchless Toilet Flush Valve, Polished Chrome, 16"H
23	PF-09	PLUMBING EQUIPMENT	Elkay	LZS8WS_K Family Water Bottle Filler_ADA, Light grey
24	PF-10	PLUMBING EQUIPMENT	Elkay	Lustertone Single Bowl Undermount ADA Sink w/ Perfect Drain, Stainless steel, 30-1/2" x 18-1/2" x 5-3/8"
25	PF-11	PLUMBING FIXTURE	Delta	Cordova Kitchen pull-down Faucet with Touchless Technology in Lumicoat, Polished Chrome
26	TA-01A	AUTOMATIC PAPER TOWEL DISPENSER	TORK	552528 PeakServe Continuous Paper Hand Towel Dispenser, Black H5
27	TA-02A	AUTOMATIC HAND DRYER	DYSON	Airblade V Hand Dryer, Nickle finish
28	TA-03A	6 GALLON WASTE RECEPTACLE - SURFACE	BOBRICK	B-9279 Surface-Mounted Waste Receptacle Fino Collection, Satin Finish
29	TA-04A	TOILET TISSUE DISPENSER - JUMBO ROLL DISPENSER	TORK	T22 - Jumbo Roll Tissue 9" toilet paper system, Smoke
30	TA-05A	TOILET SEAT BACK REST	FRANKE	CM-16104 Back Rest
31	TA-06A	HAND SOAP DISPENSER - 1 LITER	SC JOHNSON	TPW1LDS Quick View Transparent Manual Dispenser, transparent white with chrome

	Code	Description Main	BOD Manufacturer	BOD Product
32	TA-07A	GRAB BAR - HORIZONTAL	BOBRICK	B-6806.99 1-1/2” diameter, satin finish
33	TA-07B	GRAB BAR -L SHAPE	BOBRICK	B6898.99 L-Shaped Grab Bar 1-1/2” diameter, satin finish
34	TA-09A	MIRROR UNIT - BF ANGLE	BOBRICK	B-290
35	TA-09B	MIRROR UNIT	CB2	Isari Black Rough Cast Aluminum Rectangular Wall Mirror, 24" x 36", black finish
36	TA-12A	1 GALLON SANITARY NAPKIN DISPOSAL UNIT - SURFACE	BOBRICK	B-270 ConturaSeries Sanitary Napkin Disposal unit, satin finish
37	TA-33	ROBE HOOK	BOBRICK	B-549, satin stainless steel
38	TA-51	HORIZONTAL DIAPER-	KOALA KARE PRODUCTS	KB110-SSWM, white finish
39	TA-61A	UTILITY SHELF - 4" DEEP	FROST	B950-4x18 Heavy duty shelf, 18" x 4", stainless steel

Ministry of Public Safety and Security

Office of the
Fire Marshal

Place Nouveau Building
7th Floor
5775 Yonge Street
North York ON M2M 4J1
Telephone: (416) 325-3100
Facsimile: (416) 325-3213

Ministère de la Sûreté et de la Sécurité publique

Bureau du commissaire
des incendies

Édifice Place Nouveau
7e étage
5775 rue Yonge
North York ON M2M 4J1
Téléphone: 416-325-3100
Télécopieur: 416-325-3213

Ontario

GUIDELINES FOR MAINTAINING FIRE SAFETY DURING CONSTRUCTION IN EXISTING BUILDINGS

The following typical conditions usually arise during construction and could present serious unsafe conditions in case of a fire emergency.

1. Closing of Exits

All exits, including stairways and exterior doors to the outside, serving the existing building must be maintained. Where an exit is blocked off or deleted due to construction activities, an acceptable alternative exit must be provided. Where it is absolutely necessary for access to be gained through the construction area to an exit, the access must be clearly defined and protected so that it is separated from the construction area by a reasonable smoke tight fire separation equivalent to ¾ hour fire-resistance rating.

2. Intersecting Corridors – Existing Corridors on Occupied Floor Areas Exposed to New Corridors Under Construction

Temporary fire separations of steel studs and gypsum board construction equivalent to ¾-hour fire-resistance rating must be erected. Where access is desired, the opening must be protected by a door of solid core wood or hollow steel construction equipped with self-closing and latching hardware. Should such temporary fire separations cut off or eliminate required access to exits, alternative access must be provided.

3. Fire Department Access

The location of a building addition and the construction activities must not obstruct the access roadways designated for fire department equipment. If it is necessary that existing access be obstructed or deleted, alternative access, acceptable to the fire department, must be pre-planned and provided prior to commencement of construction. Sentence 3.2.5.2. (6) of the Ontario Building Code provides the design criteria for required access routes.

4. Control of Combustible Materials

The stockpiling of construction materials adjacent to the existing building must be carefully controlled. Article 2.4.2.1. of the Fire Code prohibits such storage where the materials create a fire hazard to the existing building or its occupants. Materials stored and equipment used in portion of the building under construction could create a fire hazard; for instance, the storage of excessive amounts of foam plastic insulation or the placement of open flame portable heating appliances. The control of combustibles on a construction site is also regulated under the *Occupational Health and Safety Act*.

5. Exposure of Construction in Progress to Existing Occupied Areas

Existing exterior walls with windows of plain glazing when exposed to construction in progress must be protected by ⅝" gypsum board on suitable framing for the duration of the construction. Other openings in the existing exterior walls such as doors, louvers, etc. must be similarly protected or replaced with doors of solid core wood or hollow steel construction.

6. Openings Created Through Floors or Other Fire Separations

Openings in existing floor assemblies and vertical fire separations necessitated by installation of equipment systems or construction in general must be temporarily sealed with fire barrier materials such as mineral wool or other noncombustible insulation.

7. Modification and Extension to Existing Fire Alarm Systems

Maintaining the fire alarm system in operating condition during the construction of the addition will require careful planning especially when the extension to the fire alarm system is carried out in phases.

A technical representative from the fire alarm manufacturer should be assigned to the project to coordinate the different stages of the extension. Whenever a changeover time occurs, which is an outage time of a least a portion of the fire alarm system, the municipal fire department must be notified of the temporary shutdown and alternative measure must be devised.

8. Shutdown of Fire Protection Systems

Where temporary shutdown of sprinkler systems, standpipe systems or other fire protection systems is necessary due to alterations, repairs or extensions, the appropriate requirements in the Fire Code must be observed. See Article 1.1.1.2., Clause 2.8.2.1.(1)(g), Subsections 6.4.1 and 6.5.2.

9. Fire Safety Plan

Depending on the nature of the construction, it may become necessary to modify the fire emergency procedures required under the Fire Safety Plan, subsection 2,8.2 of the Fire Code. Such changes may be of a temporary nature to accommodate revised exits, modifications to the fire alarm system operation, etc. in which case, the procedures must be returned to the original format at the completion of the project. In some cases, permanent revisions to the emergency procedures are required when the construction is completed.

Materials and closures in the temporary fire separations mentioned in the able are suggested examples only. Other materials acceptable to this Office may, of course, be sued. Should there be questions arising from any of the able situations, this Office sir to be informed and consulted to ensure that minimum life safety will be maintained. We would like to point out that partial occupancy of a building is regulated under Subsection 2.4.3. of the Building Code and comes under the authority of the Municipal Building Department.

January 2003

QUOTATION

90 Frobisher Drive, Unit 3
Waterloo, ON N2V 2A1
P: 519-886-4564
TF: 800-265-3813
Fax: 519-747-2979
promarkwindowfilm.com

October 29, 2026

TO: Meagan Sitek	**SHIP TO:**
Wilfrid Laurier University Waterloo ON (519) 802-1751 msitek@wlu.ca	WLU Library reno

QUOTE #	DELIVERY	SHIPPED VIA	TERMS
10/29/26V	approx. 3 weeks		30 days

QUANTITY	DESCRIPTION	AMOUNT
	Revised quantities	
25 shades	To supply and install motorized shades for clerestory windows. Each shade to cover two panes (unless wall intersects). Each motor can operate up to three shades. 12 low voltage motors included in this price as well as three power distribution panels and four multi-channel remotes. These quantities may change depending on location of walls.	$32685.00
49 shades	To supply and install manual roller shades for smaller lower windows.	$7245.00
	HST to be added to selected products.	
	Subtotal	$39930.00
	H.S.T.	
	Total	

Quoted by Van Tzeckas

Van@promarkwindowfilm.com

WARRANTY POLICIES

- ProMark Window Film & Blinds Inc. products are warrantied, many dependent on other manufacturers warranties and vary from manufacturer to manufacturer
- All warranties only apply to products which we have installed and have been paid in full
- Window Film is Factory guaranteed as per warranty provided at installation
- Window Blinds offer limited lifetime warranties on clutch and roller mechanism. All other parts and materials have a limited warranty. Warranty obligations exclude labour, shipping and installation costs incurred in making a warranty claim on your behalf
- We will service products beyond this warranty limit and will charge appropriate fees for any necessary parts, labour / or shipping

QUALITY ASSURANCE

- Every attempt is made to provide you with a product that you will be extremely happy with.
- These warranties do not apply to natural features of the products or conditions caused by normal wear and tear from use and normal fading from sunlight
- ProMark Window Film & Blinds Inc. cannot be assured of the quality condition and/ or installation of customer's glass and therefore will not be held responsible for glass breakage or loss of seal from application of film. Glass breakage insurance may be included in customers warranty depending on film type and installation.

LIST OF SECTIONS - MECHANICAL
20 00 01

DIVISION 20 – COMMON WORKS FOR MECHANICAL

20 01 01 - Mechanical General Requirements
20 01 02.ON - Qualifications and Authorities – Ontario
20 01 03 - Mechanical Coordination and Installation Design Services
20 01 13 - Definitions and Abbreviations
20 05 01 - Basic Materials and Methods
20 05 02 - Painting for Mechanical Services
20 05 12 - Common Electrical Requirements for Mechanical Services
20 05 23 - General Requirements for Valves
20 05 29 - Common Hanger and Support Requirements for Piping
20 05 53 - Identification for Mechanical Services
20 07 11 - Common Requirements for Mechanical Insulation
20 07 13 - Ductwork Insulation
20 07 19 - Piping Insulation
20 08 01 - Start-up and Performance Testing Reporting
20 08 11 - Testing of Integrated Mechanical Fire Protection and Life Safety Systems

DIVISION 21 – FIRE SUPPRESSION

21 05 01 - Common Work Results for Fire Suppression
21 12 13 - Standpipe and Hose Systems

DIVISION 22 – PLUMBING

22 05 01 - Common Work Results for Plumbing
22 05 23.13 - General-duty valves for plumbing piping
22 05 93 - Testing Adjusting and Balancing for Plumbing
22 11 16.13 - Domestic Water Piping – Copper
22 11 19 - Domestic Water Piping Specialties
22 13 16.13 - Sanitary Waste and Vent Piping - Cast Iron and Copper
22 13 16.16 - Sanitary Waste and Vent Piping – PVC
22 13 19.13 - Sanitary Drains
22 39 13 - Domestic Water Temperature Mixing Valves
22 42 00 - Plumbing Fixtures
22 47 00 - Drinking Fountains and Water Coolers

DIVISION 23 – HEATING, VENTILATION AND AIR CONDITIONING

23 05 01 - Common Work Results for HVAC Piping
23 05 23.13 - General-Duty Valves for HVAC Water Piping
23 05 93.13 - Testing Adjusting and Balancing for HVAC
23 21 13.23 - Hydronic Piping – Carbon Steel
23 21 13.33 - Hydronic Piping – Copper
23 31 01 - Air Distribution – General
23 31 13.13 - Metal Ducts
23 33 05 - Duct Accessories
23 33 13.11 - Manual Balancing Dampers
23 33 13.16 - Fire and Smoke Dampers
23 33 43 - Flexible Connectors
23 34 16 - HVAC Fans

23 36 13 - Air Terminal Units
23 37 13 - Grilles Registers and Diffusers

DIVISION 25 – BUILDING AUTOMATION

25 05 01 - Building Automation Common Work Results
25 05 06 - Work on Existing Building Automation Systems
25 05 12 - Building Automation Control Panels and Wiring
25 14 17 - Building Automation Terminal Unit Controllers
25 15 16 - Building Automation Software for Control and Monitoring
25 30 16.13 - Building Automation Instrumentation
25 30 19.13 - Building Automation Control Valves
25 90 01.CS100 - VAV Terminal Units
25 90 01.CS101 - VAV Terminal Units with Reheat

END OF SECTION

Master revised: August 22, 2022

MECHANICAL GENERAL REQUIREMENTS
20 01 01

1 GENERAL

1.1 General Contract Documents

.1 Comply with General Conditions of the Contract, Supplementary Conditions of the Contract, and Division 01 - General Requirements.

.2 Where content in this Specification section duplicates requirements in various Division 01 Specification sections, this section and the applicable Division 01 sections are to be read together and the most stringent requirements apply.

1.2 Work Included

.1 Work to be done under Divisions 20, 21, 22, 23 and 25 to include furnishing of labour, materials and equipment required for installation, testing and putting into proper operation complete mechanical systems as shown, as specified, as intended, and as otherwise required. Complete systems to be left ready for continuous and efficient satisfactory operation.

.2 Read drawings and specifications together as a whole and in conjunction with other such documents included under the Construction Contract.

1.3 Document Organization

.1 Applicable Divisions for Mechanical Work:

.1 Division 20 - Common Work for Mechanical

.2 Division 21 - Fire Protection

.3 Division 22 - Plumbing and Drainage

.4 Division 23 - Heating, Ventilation and Air Conditioning (HVAC)

.5 Division 25 - Building Automation System

.2 For clarity, any reference in the Contract Documents to Division 20 includes Divisions 21, 22, 23 and 25.

.3 The Specifications for these Divisions are arranged in sections for convenience. It is not intended to recognize, set or define limits to any subcontract or to restrict Contractor in letting subcontracts.

.4 Contractor is responsible for completion of work whether or not portions are sublet.

1.4 Division 20, as it applies to Divisions 21, 22, 23 and 25

.1 Division 20 contains common work requirements that are applicable as necessary to the Work of Divisions 21 to 25 and apply as if written in full within those Divisions.

1.5 Language

.1 The specification is written as a series of instructions addressed to the Contractor, and by implication to subcontractors and to suppliers. For clarity and brevity, use is made of numbered lists and bulleted lists. Where a list follows a semi-colon (;) the punctuation is for clarity. Where a list follows a colon (:) the punctuation is to be read as a short-hand form of the verb “to be” or “to have” as context requires.

.2 It is not intended to debate with the Contractor the reasons for these instructions, and words associated with justification for an instruction or restatement of anticipated performance have been omitted to avoid possible ambiguities.

1.6 Definitions and Abbreviations

.1 Specification section 20 01 13 *Definitions and Abbreviations – Mechanical* contains general definitions and abbreviations that apply to one or more specification sections of this Division of the Work. Other specification sections of the mechanical Divisions of the Work may also include additional specific definitions and/or abbreviations that apply to that specification section.

.2 The following general terms apply to Divisions 20 to 25 of the Work:

.1 The words "indicated", "shown", "noted", "listed" or similar words or phrases used in this Specification, mean that material or item referred to is "indicated", "shown", "listed" or "noted" on Drawings or in Specification.

.2 Wherever the word “listed” is used in conjunction with a product and a product certification standard (including but not limited to CSA, ULC, CGSB, BNQ, UL), it shall be understood to mean that the product is “listed” by an accredited 3rd party testing laboratory as being certified to the referenced product standard.

.3 Wherever the words “approved”, or similar words or phrases are used in the Specification they shall be understood, unless the context otherwise provides, to mean that material or item referred to shall be “approved by” the Owner.

.4 Wherever the words “satisfactory”, “as directed”, “submit”, “permitted”, “reviewed”, or similar words or phrases are used in the Specification they shall be understood, unless the context otherwise provides, to mean that material or item referred to shall be “satisfactory to”, “as directed by”, “submitted to”, “permitted by”, or “reviewed by” the Consultant.

.5 Instructions using any form of the word:

(a) “install” means to place in position and activate for service or use,

(b) “supply” means to procure and deliver materials to the place of the Work, or to make available labour or services for the stated purpose,

(c) "provide" means to supply material, labour and services to install the referenced item.

.6 The term “building code” means the edition of the applicable building code at the time of obtaining a building permit.

.7 Wherever manufacturers or manufacturer’s products are identified in lists under the phrase "Standard of Acceptance", these are manufacturers and/or products which meet the project standards in regard to performance, quality of material and workmanship.

1.7 Examination

.1 Examine any existing buildings, local conditions, building site, the specifications and drawings, and report any condition, defect or interference that would prevent execution of the work.

.2 No allowance will be made for any expense incurred through failure to make these examinations of the site and the documents prior to Tender or on account of any conditions on site or any growth or item existing there which was visible or known to exist at time of Tender.

.3 Before commencing work under this Division, examine the work of other Divisions of the Work and report any defect or interference.

1.8 Design Services

.1 Provide specialty design services for elements of the Work where specified in other sections of Division 20. Drawings and specifications prepared by such specialty design service providers shall be sealed by a professional engineer licensed in the jurisdiction of the Work.

1.9 Product Substitutions

.1 In the absence of requirements concerning product substation requests in Division 01, Contractor may propose a substitute product to that which is specified in accordance with the following.

.2 All proposed substitutions shall be submitted using the Consultant's product substitution form and include all information stated therein.

.3 The use of a substitute article or material which the Contractor represents to be of at least equal quality and of the required characteristics for the purpose intended may be permitted, subject to the following provisions:

.1 a substitution will not be considered for reasons of meeting the construction schedule unless the contractor can demonstrate to the satisfaction of the Consultant they made all reasonable efforts to procure the specified product or material in a timely fashion,

.2 the manufacturer must advise the Consultant of this intention to use an alternative article or material before doing so,

.3 the burden of proof as to the quality and suitability of alternatives to be upon the manufacturer and they shall supply all information necessary as required by the Consultant at no additional costs to the contract,

.4 the Consultant shall be the sole judge as to the quality and suitability of alternative materials and their decision to be final,

.5 where use of an alternative material involves redesign or changes to other parts of the work, the costs and the time required to effect such redesign or changes will be considered in evaluating the suitability of the alternative materials,

.6 no test or action relating to the approval of substitute materials is to be made until the request for substitution has been made in writing by the manufacturer and has been accompanied by complete data as to the quality of the materials proposed. Such request to be made in ample time to permit appropriate review without delaying the work, taking into consideration that such a substitution request may be rejected and require providing the product or material as originally specified,

.7 whenever classification, listing, or other certification by a recognized standards body is a part of the specifications for any material, proposals for use of substitute materials is to be accompanied by reports from the equivalent body indicating compliance with the requirements of the specifications,

.8 the costs of all testing required to prove equality of the material proposed to be borne by the manufacturer.

2 SHIPPING, HANDLING AND STORAGE

2.1 Shipping

.1 Provide adequate protection of equipment during shipping and handling so as to provide equipment at the Work site in ex-works condition when handled by commercial carrier systems.

.2 Provide, as necessary, removable bracing of the internal components in each item of equipment so that the equipment can be moved on its side or back, without sustaining damage.

.3 Where removeable internal bracing has been provided, the equipment to be provided with warning labels to call for the removal of the shipping bracing prior to energization.

.4 Any component that is packaged or shipped separately is to be individually crated and tagged with unit number and the equipment number of the assembly to which it belongs.

.5 Provide each "shipping section" with a permanently-attached, readily-visible identification tag bearing the equipment number of the assembly of which it is a part.

2.2 Storage

.1 Store equipment and materials at the worksite to protect them from any damage until placed into its final location. Maintain similar protection of installed equipment and materials to protect against damage until they are turned over to the Owner. Make good any damage to equipment or materials up to the time of ready for takeover.

.2 Store equipment in accordance with the manufacturer's instructions and not less than:

.1 stored in a dry, clean location,

.2 cover with polyethylene plastic sheeting,

.3 include a desiccant material under the protective sheeting to absorb moisture, or provide heated ventilated air

.3 Provide adequate ventilation and temporary heating to prevent condensation of moisture within the equipment.

2.3 Provisions for Handling and Field Erection

.1 For equipment that will require hoisting on site, provide removable side panels, lifting angles or lifting plates to accommodate the use of slings or crane hooks, for each shipping section.

.2 For floor mounted equipment, provide on each shipping section removable steel channel base plates to permit use of pipe rollers or dollies without damaging the equipment.

3 OWNER'S SPECIAL REQUIREMENTS FOR EXISTING SITES

.1 The following special requirements are in addition to the requirements of Division 01 of the Work.

.2 Provide a written list of names for employees and sub-trades entering the building, advising which areas they need access to at least 48 hours prior to expected time of arrival. This lead time is required to prearrange security passes.

.3 Security passes must be visibly worn at all times by all employees.

.4 Trades people to strictly adhere to owner's building security procedures otherwise entrance into the building will be denied.

.5 Trades people are to enter the entrance identified by the Owner.

.6 Park vehicles in designated areas. Do not block driveways.

.7 Use only the freight elevator to transport tools and material. Freight elevator door must be shut immediately after exiting the cab.

.8 Do not disable or activate any electrical or mechanical system without prior approval by the Owner's Project Manager. Also, prior to disabling or activation of any electrical or mechanical system, obtain approval from Building Operations and Building Security.

.9 Submit prior notification to Building Security Staff before any construction activity commences which will result in heat, smoke, dust or fumes, such as welding, saw cutting, soldering, spray painting, which might affect sensitive fire detection and protection equipment.

.10 Provide at least 48 hours prior notification to Building Operations for any fire system isolation requests.

.11 Schedule work and meet with sub-trades daily on site, to show trades people the work areas and work to be done.

.12 Trades-people are to supply and use their own tools. No tools, ladders or equipment, etc. will be loaned by the Owner.

.13 Provide environmental cleaning of the job site daily during construction and upon completion. This includes both under raised floor and above ceilings. Do not store materials or garbage on the loading dock.

.14 Provide special care, attention and protection when transporting equipment and materials to prevent accidental damage to fire protection equipment, finishes, furnishings and fixtures.

.15 "No Smoking" – this is a smoke-free building. Violators will be asked to leave and may be denied reentry. Smoking is not allowed on the roof.

.16 If Building Operations deems that work on a particular system requires security escort, allow 48 hours to make appropriate arrangements.

.17 For any open flame work, provide fire extinguishers and security fire watch.

.18 Obtain the approval of the Building Manager for the storage of materials on site.

.19 Perform a daily cleanup prior to leaving the site.

.20 Secure oxygen and acetylene cylinders at all times and capped nightly.

.21 Restore operating and redundant systems to their normal condition at the end of each work day unless otherwise approved by the Owner

.22 At the conclusion of each work day, the Contractor's superintendent/supervisor is to advise the Building Manager on the day's activities and plans for the next day's work.

4 PROGRESS PAYMENT PROCEDURE

4.1 Schedule of Values

.1 Provide schedule(s) of values for progress payments in accordance with this part.

.2 Prepare and submit a schedule of values ("SOV") for the Division 20 Work.

.3 Each SOV is to be in the sample format shown in Article "Attachments", specifically that the SOV is to include four sections for:

.1 Contract price work element breakdown, which includes:

(a) detailed breakdown by work element as agreed with the Consultant,

(b) line items for coordination drawings, as-built documents and operating manuals,

(c) a summary line item for authorized Cash Allowance disbursements (if applicable),

(d) line items for each Itemized Price (if applicable),

(e) line items for each Separate Price (if applicable and included in the Contract Price)

(f) a line item for the total of the original contract work element values,

(g) a summary line item for approved change instructions,

.2 Cash Allowance disbursement authorization, with separate work elements for each cash allowance,

.3 Approved Change Instructions, with separate work elements for each change instruction,

.4 Outstanding Change Instructions which are either not quoted or not yet approved.

.4 Each work element in the SOV sections (except Outstanding Change Instructions) is to include:

.1 the original contract value and the percent of original contract total value (Contract Price section only),

.2 the completed to date amount and percent of original work element contract value,

.3 the previously billed amount and percent of original work element contract value,

.4 the current billing (payment request) amount and percent of original work element contract value, and

.5 the balance to complete amount and percentage of original work element contract value.

.5 The required Contract Price work element breakdown will be determined by the Consultant, with the level of breakdown appropriate to the project such as

.1 by trade,

.2 by specification section or portion thereof,

.3 by labour vs material,

.4 by location in the building,

.5 or any combination of the above.

.6 Submit a draft SOV for review and approval by the Consultant at least three weeks before the first request for progress payment. Do not submit requests for progress payments until the SOV has been reviewed and there are no outstanding comments from the Consultant.

.7 Make requests for progress payments using the values on the reviewed SOV.

.8 When a change in the Work has been approved by the Owner, include the approved changes on the SOV for the next payment application, whether or not payment is requested in full or in part for that change in that payment request period.

.9 For each SOV, include a line item “As-Builts & Operating Manuals” and includes a value that is the greater of:

.1 the value of the work or,

.2 1% of the Division 20 contract price.

Payment of the indicated amount will not be made until satisfactory documents have been received by the Consultant. Where satisfactory documents are not received, a Change Directive and an associated Change Order will be issued to delete this work element and the amount from the Contract Price.

5 CONSTRUCTION CHANGES

5.1 General

.1 The valuation method to be used for a change instruction to the Work is to be determined by the Consultant from the following methods:

.1 by labour and material when the change instruction is by a Change Directive;

.2 by unit prices set out in the Contract or subsequently agreed upon for other change instructions;

.3 by a detailed quotation for other change instructions; or

.4 by a Cash Allowance Disbursement instruction.

5.2 Definitions

.1 The following definitions apply to this section

.1 Allpricer – *the material pricing guide/service provided by Allpricer Limited.*

.2 ***MCAA manual*** – the Mechanical Contractors Association of America publication *Labor Estimating Guide for Service* for labour units.

.3 ***Base wage rate*** – the hourly rate actually paid to the trades person, determined in accordance with applicable collective bargaining agreement, or in their absence the actual gross wages paid to the worker.

.4 ***Job Site Impact Multiplier*** – a multiplier expressed as a decimal number that is included in the Labour Rate to account for special job site conditions that affect labour availability, labour productivity, procurement of materials, and materials management, that are specific to the project and site conditions.

.5 ***Indirect labour –*** any labour that is neither journeyperson labour that directly performs the work nor labour that directly supervises journeyperson(s).

.6 ***Labour Rate*** – the actual fully burdened labour cost per hour of labour consumed by a trades person including statutory and regulatory burden, collective bargaining burden, and other project related burden. For greater clarity, the labour rate includes but is not limited to the following:

(a) base wage rate,

(b) vacation and statutory holiday pay,

(c) union deductions and additional union charges,

(d) Legislated burdens including EHT, WSIB, EI, CPP, RST on H/W

(e) wage-based taxes,

(f) job site impact multipliers,

(g) expendable small tools charge,

(h) project insurance,

(i) financing of payroll,

(j) estimating,

(k) rest breaks and idle time,

(l) safety including training, safety meetings, WHMIS, fall protection, personnel protection equipment, and safety committees,

(m) preparation and handling of shop drawings and other submittals,

(n) preparation of as-built documents, including operation and maintenance manuals,

(o) labour warranties,

(p) site facilities,

(q) clean-up,

(r) parking.

.7 ***Foreperson*** – a first level supervisory position having direct control over the work performed by journeypersons.

.8 ***Journeyperson*** *– a person working in a skilled construction trade which may be prescribed by regulation, and includes apprentices.*

.9 ***Labour Unit*** – the number of journeyperson labour hours or part thereof, required to perform a specific construction task, and includes but is not limited to:

(a) receiving, unloading, stockpiling, distribution and handling of materials and equipment,

(b) rigging or erecting of materials or equipment,

(c) fitting and joining of materials,

(d) pressure testing of piping and ductwork systems,

(e) testing of equipment and systems.

.10 ***Line materials*** – components that make up a distribution network for fluid, power, or electronic/digital information, and includes:

(a) piping, pipe fittings, valves (of all kinds), pipe strainers and other pipe mounted equipment,

(b) ducting, duct fittings, duct balancing dampers and other duct mounted equipment,

(c) conduit, cable tray, cable, conductors, and wiring,

(d) supports, hangers and restraints,

(e) vibration isolators and seismic restraints associated with line materials,

(f) instrumentation including gauges and sensors/transmitters,

(g) electrical, pneumatic, and hydraulic actuators for valves and dampers, and

(h) any coatings or other protective elements applied thereto including insulation and painting.

.11 ***Overhead*** – administrative expenses of the Contractor's business and the project which are not included in a Labour Rate or Labour Unit. For greater clarity, overhead includes but is not limited to the following:

(a) company office, storage, and fabrication spaces, and associated maintenance, utilities, and expenses,

(b) project site office, fabrication and storage spaces, washrooms, break rooms, and associated maintenance, utilities, and expenses,

(c) company office equipment, furniture and supplies,

(d) project site office equipment, furniture and supplies,

(e) labour time for project managers and project assistants,

(f) project site security,

(g) project site clean-up, recycling and waste disposal,

(h) materials management,

(i) property taxes, business licenses, and auto insurance,

(j) dues and subscriptions,

(k) postage and courier,

(l) advertising, telephone, IT services and equipment,

(m) legal and accounting fees and expenses,

(n) sales and marketing,

(o) salaries and benefits for company indirect labour including company management, sales force, dispatchers, estimators, clerical staff, and at-office general (non-trades) labour.

(p) all other indirect labour.

.12 Senior Foreperson – the second (and subsequent) level supervisory position having direct control over one or more Forepersons, where the number of Forepersons supervised is in accordance with local regulatory requirements or collective bargaining agreements. ("Superintendent" or "Supervisor" has the same meaning.

5.3 Change Directive Method

.1 Except where otherwise determined in the Construction Contract or Division 01 specification, the valuation of changes by the Change Directive method shall comply with the following:

.1 the form of presentation of costs and methods of measurement shall be agreed to by Consultant and Contractor before proceeding with the change,

.2 the adjustment in the Contract Price for a change carried out by way of Change Directive shall be determined on the basis of the cost of the Contractor's actual expenditures and savings attributed to the Change Directive. For clarity and by example, savings for deductions of similar materials,

equipment, labour or services shall be valued at the same amount as for expenditures for additions of same.

.3 labour costs will be determined based on actual time spent and the agreed labour rate, the actual cost of installed line materials and equipment, and the agreed fee for overhead and profit,

.4 if the change results in a net decrease in Contract cost, the contract price will be decreased by the net decrease in the cost, without adjustment for the Contractor's percentage fee for overhead and profit,

.5 the Contractor shall keep accurate records, in an agreed upon form, of time, quantities and invoiced costs and present an account of the cost of the change in the Work, together with vouchers, material receipts and invoices,

.6 this time and material method shall be used until such time as a total cost estimate of the change is agreed between the Owner and the Contractor, at which time all payments made under this time and material method will be credited against the agreed total cost for the change.

5.4 Unit Price Method

.1 Costing of changes by the Unit Price method:

.1 Costs for work identified by agreed unit costs shall be charged at those rates, unless the Owner agrees to other rates.

5.5 Proposed Changes; Other Change Instructions Method

.1 For proposed changes to the Work or other similar instructions, submit a detailed quotation for approval.

.2 The adjustment in the Contract Price for a change carried out by way of proposed change or other similar instruction shall be determined on the basis of the cost of the Contractor's actual expenditures and savings attributed to the Proposed Change. For clarity and by example, savings for deductions of similar materials, equipment, labour or services shall be valued at the same amount as for expenditures for additions of same.

.3 Costs are to be approved by the Owner before the proposed change to the Work proceeds. The quotation for the change to the Work is to include a summary of charges made up of three components: labour charges, material costs and fees.

.4 Labour Charges:

.1 The labour unit hour estimates are to be based on the current MCAA estimating manual unless otherwise agreed by the Consultant;

.2 The labour cost is to be determined using the agreed labour rates.

.3 Labour rates for Foreperson and Senior Foreperson shall be as per agreement, or in absence of such agreement shall be 1.15 times the journeyperson labour rate. The maximum allowable labour hours for supervision are not to exceed:

(a) for a Foreperson, a maximum of 10% of the total calculated journeyperson hours on a change, and

(b) for a Senior Foreperson of all levels, a maximum combined amount of 3% of the total calculated journeyperson hours on a change.

(c) no other supervisory hours will be permitted.

.5 Material Charges:

.1 Material costs for line materials and installed equipment are to be net of trade discounts. The discount to be applied to list prices for items included in Allpricer manual shall not be less than:

(a) 20% for line materials, and

(b) 10% for equipment that is not line material.

.6 Fees:

.1 Refer to Division 01 regarding fees for overhead and profit on changes to the Work

5.6 Cash Allowances; Contingency Allowances

.1 Instructions for changes to the Work to be performed under a cash allowance or contingency allowance ("Allowance") included in the contract price shall be authorized by a Cash Allowance Disbursement instruction.

.2 Except as described below, the determination of costs for Work performed under an Allowance shall be in accordance with the procedure for proposed changes unless otherwise instructed to proceed with the work, in which case the cost of such work shall be valued in accordance with the procedures for Change Directive.

.3 The contract price, not the Allowance, includes the overhead and profit fee for the value of the Allowance.

.4 Except where otherwise specified in the Construction Contract, where the cost of the Work performed under a Cash Allowance Authorization;

.1 is less than the Allowance value, the contract price includes the overhead and profit for the contractor and any sub-contractors. A change order will be issued for a credit for the balance of the Allowance, but shall not include the associated overhead and profit fee.

.2 exceeds the Allowance value, a Change Order will be issued for the amount in excess of the Allowance, and the excess amount is to include the agree fee for overheat and profit.

6 SUBMITTALS

6.1 Shop Drawings and Product Data Sheets

.1 Submit shop drawings, manufacturers product data and samples in accordance with the requirements of Specification sections of Division 01, this Part, and as further required in other Specification sections of Division 20.

.2 Submit shop drawings in the same unit of measure as are used on the drawings. Both metric and U.S. customary units may be included.

.3 Submit shop drawings by email to: shopdrawings@hhangus.com, except where a project document management web-service is used.

.4 Include a H.H. Angus shop drawing cover sheet form prepared for this project for each shop drawing submittal (refer to part "Attachments" for an example of this form) , or include the same information on the general or trade contractor's submittal cover sheet;

.1 Information required on each submission:

(a) Client/Architect name,

(b) Project Name,

(c) H.H. Angus project number,

(d) Date,

(e) Contractor name,

(f) Contractor reference No.,

(g) Manufacturer name,

(h) Product type,

(i) Specification section number,

(j) Contractor trade category: architectural, structural, conveying equipment, user equipment, mechanical, electrical, telecommunications, civil or other.

(k) If a re-submission, the Consultant's previous submittal reference number.

.5 Submit shop drawings in PDF format except as follows;

.1 if the Consultant agrees to a shop drawing to be submitted in hardcopy format, submit in 8.5 x 11 or 11 x 17 size, black and white originals of graphic quality suitable for photocopying and digital scanning. Allow one additional week for processing of shop drawings submitted in hardcopy format.

.6 Manufacturer's letter sized product data sheets for standard items are acceptable in place of shop drawings provided that physical characteristics are identified and are related to specification references.

.7 Submit with manufacturers data sheets, typed schedules listing manufacturer's and supplier's name and catalogue model number.

.8 For plumbing fixtures and other permeant fixtures, submit fixture sheets with catalogue numbers. Identify and arrange fixture sheets in the same sequence and using the same identification number as shown in specification fixture lists.

.9 Shop drawings and/or product data sheets to show;

(a) dimensioned outlines of equipment and construction details,

(b) equipment weights and center of gravity,

(c) performance ratings,

(d) dimensioned details showing service connection points,

(e) elevations illustrating locations of visible equipment such as gauges, pilot lights, breakers and their trip settings, windows, meters, and access doors,

(f) description of operation,

(g) single line diagrams,

(h) general routing of bus ducts and connecting services,

(i) mounting and fixing arrangements,

(j) operating and maintenance clearances,

(k) access door swing spaces, and

(l) where products are required to be certified to a published standard, the mark of the testing organization who certified the product and the standard reference number to which it is certified.

.10 Shop drawings and product data to be accompanied by;

(a) detailed drawings of bases, supports and anchor bolts,

(b) sound power data, where applicable, and

(c) performance curve for each piece of equipment marked with point of operation.

.11 Shop drawing and data sheet submission is taken as certification that the products are;

.1 from the manufacturer's current production, and

.2 in compliance with applicable codes, standards, and regulations.

.12 For standard catalogued (non-custom) products, do not submit drawings showing internal construction details, component assemblies or interior piping and wiring diagrams. Such information may be necessary to understand correct functioning of equipment and are to be submitted with operating and maintenance data.

.13 Check and stamp each shop drawing as being correct before submission. Shop drawings without such stamps will be rejected and returned.

.14 Keep one copy of each reviewed shop drawing and product data sheet on site and have them available for reference purposes.

.15 Where equipment is delivered without reviewed shop drawings, equipment will be condemned and is to be removed from site and replaced with new equipment after shop drawings have been submitted and reviewed.

6.2 Coordination, Fabrication, or Installation Drawings

.1 Contractor coordination, fabrication, installation and/or sleeving drawings are to be provided in accordance with specification Section 20 01 03 *Mechanical Coordination and Installation Design Services.*

.2 Contractor's coordination, fabrication, installation, and/or sleeving drawings will not be reviewed as shop drawings. If submitted as a shop drawing, a transmittal only will be returned identifying the submitted drawings have not been reviewed as a shop drawing.

.3 Maintain a copy on site of such drawings for reference by the Consultant.

.4 The Consultant reserves the right to request selected Contractor's coordination, fabrication, or installation drawings for review.

6.3 Effect of Consultants Review of Submittals

.1 Consultant's review of shop drawings is performed on a sampling basis only, to confirm to Consultant's satisfaction that the Contractor understands the Work to be performed and is interpreting the design documents correctly, and such reviews are performed for the benefit of the Owner.

.2 For greater certainty, the review of shop drawings by Consultant does not constitute a quality control function for the benefit of Contractor, nor does such a review relieve Contractor of their responsibility for complying with the Contract documents.

7 APPLICABLE CODES, STANDARDS AND REGULATIONS; PERMITS

7.1 Codes, Standards and Regulations

.1 Where a published product standard or installation code is adopted by statute or regulation by an applicable AHJ, the applicable edition of the standard or code is the one that has been adopted

.1 at the time of obtaining a permit for the applicable portion of the Work, or

.2 in the absence of a requirement for a permit, the start date of construction.

.2 Where a published product standard or installation code is not adopted by statute or regulation, then the most current edition of that standard or code at the start date of construction applies.

.3 Install mechanical and electrical systems in accordance with the applicable requirements adopted by the AHJ in the jurisdiction of the Work.

.4 Where requirements of the Specifications exceed those of applicable codes, standards, and regulations the requirements of the Specifications is to govern.

.5 In the event of a conflict between codes, bulletins, regulations, or standards, or where work shown is in conflict with these documents, obtain interpretation before proceeding. Failure to clarify any ambiguity will result in an interpretation requiring application of the most demanding requirements.

7.2 Confined Spaces

.1 Unless otherwise prescribed by the Constructor's / Owner's workplace safety program, treat spaces not designed and constructed for continuous human occupancy as confined spaces in accordance with applicable health and safety legislation, including but not limited to:

.1 horizontal and vertical service spaces, shafts, and tunnels,

.2 inside of equipment which permits entry of the head and/or whole body, and

.3 ceiling spaces which are identified as containing a hazardous substance.

7.3 Permits, Tests and Certificates

.1 Arrange and pay for permits, tests, and Certificates of Inspection required by the AHJ applicable to the element of the Work.

.2 Submit applications requiring Owner's signature before commencing work.

.3 Obtain and submit applicable AHJ Inspection certificates or reports including but not limited to:

(a) Electrical inspection,

(b) Plumbing and drainage inspection,

(c) HVAC inspection,

(d) Pressure Vessel Inspection.

(e) Piping and Boiler Inspection.

(f) Fuel safety Inspection.

.2 Renew certificates or reports so as to remain in force through the warranty period.

.4 Co-ordinate and perform testing required by an AHJ in accordance with the Part on Testing in this Section.

8 COMMON PRODUCT REQUIREMENTS

8.1 Standard of Material and Equipment

.1 Provide materials and equipment in accordance the requirements of Specification section of Division 01 and as follows.

.2 Materials and equipment:

.1 new and of uniform pattern throughout work,

.2 of Canadian manufacture where obtainable,

.3 standard products of approved manufacture,

.4 labeled or listed (certified) to applicable standards in accordance with Specification sections of the Work and as required by authorities having jurisdiction,

.5 registered in accordance with the requirements of the applicable provincial pressure vessels regulation and registered in accordance with CSA B51 for Canadian Registration Numbers, as applicable,

.6 in compliance with Standards and Regulations including but not limited to;

(a) chemical and physical properties of materials,

(b) design,

(c) performance characteristics, and

(d) methods of construction and installation.

.7 identical units of equipment to be by the same manufacturer. ,

.8 identical component parts of same manufacturer in similar units of equipment, but various component parts of each unit need not be from one manufacturer.

.3 Materials and equipment are described to establish standards of construction and workmanship. Where manufacturers and/or products are listed under “Standard of Acceptance”, select manufacturers and or

products from these lists. Use of manufacturers or products other than as listed are subject to specification requirements concerning requests for substitution.

.4 Include items of material and equipment not specifically noted on Drawings or mentioned in Specifications but which are required to make a complete and operating system.

.5 Confirm capacity or ratings of equipment being provided, when based on ratings of equipment being provided under other trade Sections, before such items are purchased.

.6 Factory fabricated control panels and component assemblies are to be listed for electrical safety requirements.

.7 Select materials and equipment in accordance with manufacturer's recommendations and these Specifications, and install same in accordance with manufacturer's instructions and these Specifications.

.8 Materials and equipment not satisfying these selection criteria will be condemned. Remove condemned materials from job site and provide properly selected and approved materials.

8.2 Manufacturers Nameplates

.1 Provide manufactured equipment with metal nameplate with raised or recessed lettering, mounted on each piece of equipment. On insulated equipment, mechanically fasten plates on metal stand-off bracket arranged to clear insulation.

.2 Manufacturer's nameplate to indicate equipment size, capacity, model designation, manufacturer's name, serial number, voltage, cycle, phase and power rating of motors, and approval listings.

.3 Certified products are to clearly show the mark of the certification agency when in the final installed state.

8.3 Factory Applied Painting

.1 Protect factory finished equipment during construction, and clean at completion of work.

.2 Touch-up factory painted prime and/or final coats damaged during construction, with colour matching paint recommended by the equipment manufacturer.

.3 Use heat resistant paint where conditions require.

8.4 Factory Applied Prime Painting

.1 Factory-prime paint other equipment fabricated from iron or steel, including equipment supports and hangers, access platforms, access doors, registers, grilles, diffusers, dampers, metal radiation enclosures and fire hose cabinets where separate product specifications do not require a factory applied final coat.

8.5 Field Painting

.1 After equipment has been installed and piping and insulation is completed, clean rust and oil from exposed iron and steel work provided under this Division, whether or not it has been factory prime painted.

.2 In "occupied" areas of building touch up any damage to prime coat resulting from shipping or installation and leave ready for final decorative painting under Finishes, Division 9.

.3 In "un-occupied" areas of the building such as mechanical equipment rooms, boiler rooms, fan rooms, crawl spaces, pipe tunnels and penthouses, provide corrosion coatings and floor sealers in accordance with specification section 20 05 02 *Painting for Mechanical Services*.

.4 In addition, apply prime and/or final paint coats to equipment and materials where specifically detailed in other Sections of these Divisions.

8.6 Provision for Future

.1 Where space is indicated as reserved for future equipment or for future extension to building, leave such space clear and install piping, raceways and equipment so that connections can be made to future apparatus or building.

.2 Identify provisions and service terminations for future on Record Drawings.

8.7 Maintenance of Bearings

.1 Turn-over rotating equipment at least once a month from delivery to site until start-up.

.2 Run-in sleeve type bearings in accordance with manufacturer's written recommendation. After "run-in", drain, flush out and refill with new charge of oil or grease.

.3 Protect bearings, shafts and sheaves against damage, corrosion and dust accumulation during building construction.

8.8 Pre-purchased Equipment; Damage and Ownership

.1 At time of receipt of pre-purchased or pre-tendered equipment at the job site by the installing mechanical contractor, provide the services of the manufacturer/distributor/supplier's technical representative to:

.1 inspect the equipment prior to unloading,

.2 witness the unloading and advise the contractor on the appropriate method for handling the equipment in order to avoid damage during the unloading, moving and setting in place phase of the equipment, and

.3 report any damage to the Consultant.

.2 In the event the equipment has been found to be damaged before unloading, it is to be returned immediately to the factory for repairs and/or replacement by the manufacturer/supplier.

.3 In the event of damage occurring at any time during unloading and until the equipment is accepted by the Owner, the installing contractor is responsible for repairs and/or replacement of the damaged equipment to the satisfaction of the Owner.

9 OFFICE AND STORAGE; TOOLS

9.1 Office and Storage

.1 Provide temporary office, washroom and lunchroom facilities, workshop, and tools and material storage space. Facilities may be site trailers or as otherwise approved by the General Contractor/Construction Manager.

.2 Assume responsibility for security of these facilities.

.3 Provide heat, light and telephone and Internet service

.4 Owners cafeteria is off limits.

9.2 Tools, Temporary Equipment and Materials

.1 Provide tools, equipment, scaffolding, extension cords, lamps and miscellaneous consumable materials, required to carry out the Work.

10 COORDINATION; INSTALLATION DRAWINGS

10.1 Coordination

.1 Consultant drawings are diagrammatic and illustrate the general location of equipment, and intended routing of ductwork, piping, etc. and do not show every structural detail. In congested areas drawings

at greater scale may be provided to improve interpretation of the Work. Where equipment or systems are shown as “double line”, they are done so either to improve understanding of the Work, or simply as a result of the use of a CAD drawing tool, and in either case such drawings are not represented as fabrication or installation drawings.

.2 Lay out and coordinate Work to avoid conflict with work under other Divisions.

.3 Make good damage to Owner's property or to other trade's work caused by inaccurate layout or careless performance of work of this Division.

.4 When equipment provided under other Sections connects with material or equipment supplied under this Section, confirm capacity and ratings of equipment being provided.

.5 Take information involving accurate measurements from dimensioned Architectural Drawings or at building.

.6 Install services and equipment which are to be concealed, close to building structure so that furring is kept to minimum dimensions.

.7 Location of pipes, ductwork, raceways and equipment may be altered without extra cost provided instruction is given or approval is obtained, in advance of installation of items involved. Changes will be authorized by site instructions and are to be shown on Record Drawings.

.8 Location of floor drains, hub drains, combination drains, plumbing fixtures, convectors, unit heaters, diffuser, registers grilles and other similar items may be altered without extra cost provided instruction is given prior to roughing in. No claim will be paid for extra labour and materials for relocating items up to 3 m (10 ft) from original location nor will credits be anticipated where relocation up to 3 m (10 ft) reduces material and labour.

.9 Include incidental material and equipment not specifically noted on Drawings or mentioned in Specifications but which is needed to complete the work as an operating installation.

10.2 Field, Fabrication, and Installation Drawings

.1 Prepare field, fabrication, and/or installation drawings to show location of equipment and relative position of services, and to demonstrate coordination with the work of other trades;

.1 drawing scale: minimum 1:50 (1/4"=1'-0")

.2 use information from manufacturer's shop drawings for each trade and figured dimensions from latest Architectural and Structural Drawings,

.3 layout equipment and services to provide access for repair and maintenance,

.2 Circulate drawings to other trades involved in each area, and conduct coordination meetings with those trades.

11 ANCHORS AND INSERTS

.1 Supply anchor bolts and locating templates for installation in advance of concrete pouring.

12 CUTTING, PATCHING AND REMEDIAL WORK

12.1 General

.1 Assume responsibility for prompt installation of work in advance of concrete pouring, masonry, roofing, finishing trades and similar work. Should any cutting or repairing of either unfinished or finished work be required because such installation was not done, employ the particular trade whose work is involved to do such cutting and patching and pay for any resulting costs.

.2 Neatly cut or drill holes required in existing building elements to accommodate building services including ductwork, piping, cable, raceways, bus duct or cable tray.

.3 Arrange and pay for all cutting and patching as required for the Work. Before cutting, drilling, or sleeving structural load bearing elements, obtain the Consultant's approval of location and methods in writing. Employ original installer or expert in the finishing of material required to perform cutting or patching for weather-exposed, moisture-resistant elements or sight-exposed surfaces.

12.2 Structure Scanning and Cutting

.1 Layout cutting of structural elements, such as floors slabs, walls, columns or beams and obtain approval before starting work. Conduct an initial electromagnetic scan of reinforcing rods and electrical conduit, and review with structural engineering Consultant.

Standard of Acceptance

° Hilti - fig. PS 300 Ferroscan

.1 [Radiographic examination of the building structure is not permitted.] [Based on the preceding results, arrange and pay for supplemental radiographic examination where necessary to improve on locating concrete reinforcement, conduits and other embedment's.

.1 submit radiographic results to the structural engineer and obtain comments before starting work,

.2 [][the use of radiographic imaging methods is subject to approval by the Owner on a case by case basis.]

.2 [Based] [[As an alternative to radiographic examination for areas where the Owner does not permit radiographic examination, based] on the preceding results, provide two-dimensional ground penetrating radar scans to locate concrete reinforcement, conduits and other embedment's. Scanners to be operated by personnel trained by the measurement device manufacturer.

Standard of Acceptance

° Hilti PS1000 X-SCAN

.3 Relocate core drilling location if steel or conduit is found in the proposed location and repeat procedure. Reroute any circuits damaged by core drilling.

.4 Scan for all shots and anchors in floors, walls, and ceilings.

13 PROTECTION OF PERSONNEL, WORK, AND PROPERTY

13.1 Personnel Protection

.1 Without limiting the Contractor's responsibilities regarding occupational health and safety requirements at the construction site, provide specific personnel protection as follows:

.1 protect exposed live equipment during construction for personnel safety,

.2 shield and mark live parts "LIVE 120 VOLTS", or with appropriate voltage,

.3 arrange for installation of temporary doors for rooms containing electrical distribution equipment. Keep these doors locked except when under direct supervision of electrician,

.4 do not leave conduit, wires, cables, tools, equipment or materials in such a way that they constitute a hazard,

.5 provide toe guards around openings in the roof or floor to prevent materials or debris from dropping down to a lower level,

.6 remove loose equipment and tools from overhead areas before leaving each day,

.7 cut off bolts at floor level to eliminate a possible tripping hazard.

13.2 Protection During Construction

.1 Provide protection required to enable existing building and equipment to remain in continuous and normal operation.

.2 Take the necessary precautions to protect equipment, existing building and service from damage during the Work. Accept responsibility for any damage and make good without cost to the Owner.

.3 Protect existing surfaces and items so that they are not damaged in any way whatsoever by the work of all trades. Take precautions as necessary to prevent damage to walls, floors, ceilings, windows, doors, door frames, moldings, finishes, piping, ductwork, light fixtures, etc. Provide protection, hoarding, tarpaulins, dust sleeves etc., as required. Any damage caused because of lack of adequate protection to be made good at no cost to the Owner.

.4 Take care when working above or around equipment that must remain in service.

.5 Take care to eliminate dust in equipment areas.

.6 Protect switchgear fronts from accidental breaker trips when working around or above them. Provide an extended shield constructed of 12 mm (½") fire retardant plywood a minimum of 450 mm (18") from board front to allow access to board.

13.3 Core Drilling

.1 Wherever core drilling is required, provide temporary dust proof screens.

.2 In areas where core drilling through a slab in an operating facility is necessary, clearly mark out the areas to be drilled on the underside of slab. Owner's representative to be notified at least 1 week prior to core drilling operation. Provide tarping of equipment supervised by the Owner.

.3 During core drilling operations, station at least one person directly below the area of drilling with a large plastic container pressed to underside of slab to capture and hold core and water upon completion of operations.

.4 Continuously use a wet/dry commercial quality vacuum at location of drilling operation to remove all excess water from the area.

13.4 Temporary Dust Proof Screens

.1 Provide temporary dust proof screens where required to separate work areas from completed areas and/or existing areas, to prevent dust from settling on the Owner's plant and equipment.

.2 Dust proof material to be neoprene coated nylon tarpaulin or other types of fabric.

.3 Provide temporary framing as required.

.4 Extend dust proof screens from floor to underside of ceiling, floor, or roof above. Lap sections of screen sheets 150 mm (6") minimum and tape joints.

.5 Secure screen sheets at top, bottom and ends and tape perimeter.

.6 Provide temporary doors and frames with weather seals to provide frequent access to the work zone. Other closure methods may be used where infrequent access or short term access (less than one week) only is required.

.7 Co-operate with Owner in the erection of temporary dust proof screens.

.8 Provide yellow-black warning tape along perimeter of the screen junction with the floor.

.9 Remove screens when and as directed by Consultant.

13.5 Protection of Floors During Equipment Installation

.1 Provide protection of floor finishes during installation or removal of equipment, and at any other time when moving or installing heavy equipment.

.2 Install 19mm (¾") plywood over 6 mil plastic over finished floor areas when moving heavy equipment that could damage floor finish, or when installing equipment or line materials overhead.

.3 Repaint or re-tile any floors or walls damaged or scratched during construction.

13.6 Housekeeping

.1 Maintain a high level of cleanliness.

.2 Remove scrap and refuse from the work area daily.

.3 Whenever possible, clean up immediately following completion of work.

.4 Deposit oily and waste solvent rags in approved containers to minimize the fire hazard.

.5 Sweep and damp mop daily.

14 WORK IN EXISTING BUILDING

14.1 General

.1 Comply with Specification section of Division 01 for restrictions on working in existing occupied buildings and as follows.

.2 During the tender period, the Contractor shall perform a site inspection of the place of work and surroundings including the accessible ceiling spaces and other areas where access could be considered reasonable. Make a thorough investigation of as-built conditions to determine scope of renovation or demolition work required prior to submitting tender.

.3 The Work includes changes to existing building and changes at junction of old and new construction. Route pipes, ducts, conduits and other services to avoid interference with existing installation.

.4 Coordinate with Owner for specific times to perform core drilling.

.5 Relocate existing pipes, ducts, conduits, bus ducts and any other equipment or services required for proper installation of new work, including as required for temporary removal and re-installation to suit new installation work.

.6 Remove existing plumbing fixtures, lighting fixtures, piping, ductwork, wiring, and equipment to suit new construction. Cut back and cap drain, vent and water outlets, conduits and electrical outlets, not being used.

.7 Unless noted otherwise removed materials and equipment become the property of the Contractor and are to be taken from the site and disposed of appropriately.

.8 On completion of relocations, confirm relocated equipment are in proper working order.

.9 Where Owner wishes to take over renovated areas ahead of project completion date and these areas are to be fed from new distribution systems, make temporary connections to existing services in these areas. Reconnect to permanent services, at later date, when new distribution systems are available.

14.2 Continuity of Services

.1 Keep existing buildings in operation with minimum length of shutdown periods.

.2 Make connections to existing systems at approved times.

.3 Obtain written approval recording times when connections can be made.

.4 Arrange work so that physical access to existing buildings is not unduly interrupted.

.5 Be responsible for and make good any damages caused to existing systems when making connections.

.6 Provide premium time labour to tie-in to services at night or on weekends.

.7 For piping systems, make connections to existing piping by draining down the existing piping system. Use of hot-tapping or freezing of piping is only permitted where approved by the Owner and a specification section for such work has been included in the project specifications.

.8 Provide temporary services to drain down existing piping systems which convey liquids or steam condensate, including provision of temporary hoses, etc., and provide services to perform the drain down of these systems, except where the Owner elects to perform such drain-downs.

.9 For piping systems conveying liquids, after completion of new work to existing piping systems, refill the existing and new piping systems including provision of cleaning of new piping and addition of chemical treatments, as applicable, in accordance with the requirements of other sections of Division 20. Include for addition of replenishing chemical treatment for existing piping systems in accordance with the Owner's existing chemical treatment program, or in the absence of such, in accordance with the chemical water treatment requirements specified in other Sections of Division 20.

15 MOVING AND SETTING IN PLACE OF OWNER-SUPPLIED PRODUCTS

15.1 General

.1 The requirements of this Part applies to;

.1 Division 20 equipment that has been directly purchased by the Owner, and

.2 other Owner-supplied products or equipment (i.e. process equipment) that has building services requirements.

.2 Comply with the requirements of Specification section of 01 11 00 *Summary of Work* and as specified herein.

15.2 Owner-Suppled Products (Supplied by Owner Equipment – "SBO")

.1 Items marked SBO on drawings are to be;

.1 purchased by the Owner,

.2 received, checked, and stored by the Contractor, and

.3 subsequently unpacked, uncrated, assembled and located in its final location by the Contractor, and installed in accordance with the manufacturer instrutions,

.4 participate in the start-up and testing of the equipment and placing into service.

.2 Provide mechanical and electrical services to SBO equipment in accordance with the SBO equipment manufacturer's instructions and as otherwise shown.

15.3 Existing Owners Equipment to be Relocated (E.R. or Ex. Rel.)

.1 Applies to owners existing equipment which has mechanical and electrical services, and marked on the drawings as E.R. Ex.Rel. or otherwise so identified.

.2 Items so marked on drawings are to be moved from their present location and reinstalled by the Contractor.

.3 Disconnect and reconnect mechanical and electrical services to accommodate this equipment relocation.

16 TEMPORARY HEATING

16.1 During Construction

.1 Temporary heating required while building is under construction will be provided under Division 01.

.2 Permanent heating system may be used for temporary heating, when this equipment is installed in its permanent location and the building is closed-in and Contractor under Division 1 provides staff for operation and maintenance whenever permanent heating system is being used for temporary heating.

.3 Hot water boilers may not be used unless heating units, radiation, pumps and piping are complete, the piping system has been pressure tested, cleaned, and final chemical water treatment is in operation.

.4 Permanent heating equipment used for temporary heating to be thoroughly cleaned and put in first class operating condition and appearance at completion of the Work, as approved by the Owner.

17 FINAL CLEANING AND ADJUSTMENTS

17.1 Final Cleaning

.1 Conduct final cleaning in accordance with Division [01 74 00] requirements and as specified herein.

.2 Perform final cleaning after construction activities that create dust have been completed.

.3 Thoroughly clean exterior surface of exposed piping, and vacuum external surfaces of exposed ducts and interior surfaces of air handling units. Clean strainers in piping systems and install clean filters in air handling systems immediately prior to handover of the building to the Owner.

.4 HEPA vacuum the top and interiors of motor controllers, VFDs, control panels, and control cabinets followed by a thorough HEPA vacuuming of the service room floors. Thoroughly wash floors with wet mop and clean water. Control access to the room after cleaning. Provide temporary filter media on air supply ducts to these rooms to prevent re-contamination from other areas of construction.

.5 Remove tools and waste materials on completion of work and leave work in clean and perfect condition.

17.2 Final Adjustments

.1 Calibrate components and controls and check function and sequencing of systems under operating conditions.

.2 Supply lubricating oils and greases for proper operation of equipment and systems until work has been accepted.

18 RECORD DRAWINGS

18.1 Record Drawings

.1 Maintain record drawings in accordance with Section [01 78 00] during the course of the Work and as follows.

.2 A set of design drawings in AutoCad, Revit, or PDF format (as determined by the Consultant) will be provided by the Consultant. Record changes in actual installation as the Work progresses by the following method:

.1 make sets of white prints for each phase of Work and mark-up the print drawings, or

.2 revise the AutoCad or Revit file directly, and identify all changes made.

.3 Mark-up these record drawings to provide dimensioned locations of drains, pipes, ductwork, conduit, manholes, foundations and similar buried items within the building, with respect to building column centres. Mark level with respect to an elevation which will be provided.

.4 Retain on-site the survey information from excavation and backfill of site services, and after approval, transfer this information to the record documents.

.5 Retain these drawings and make available to Consultant for periodic review.

.6 At 50%, 75% and 90% project completion, scan marked-up drawings to PDF format and submit copy to the Consultant, or to the project on-line document management service if one is used.

18.2 As-Built Drawings

.1 Prior to testing, balancing and adjusting, transfer site record drawing information to a copy of the computer aided drafting/design program (“CAD”) files, in the same software format used for the Consultants design drawings, to record final as-built condition.

.2 Obtain a current set of CAD files from the Consultant. The Consultant's CAD files may not reflect all or any construction changes.

.3 Drawings are to remain set to and follow Consultants CAD Standards - do not alter drawing scales, reference files, colours, layers or text styles,

.4 Where items have been deleted, moved, renumbered or otherwise changed from contract drawings, revise the CAD files to record these changes. “Bubble” these revisions, and place these annotations on a separate and easily identified drawing layer.

.5 Show on mechanical as-built drawings final location of piping, ductwork, switches, starters, Motor Control Centres, thermostats, and equipment.

.6 Show on site services as-built drawings survey information provided by an accredited land surveying service.

.7 Identify each drawing in lower right hand corner in letters at least 12 mm (½ in) high with a note as follows:

AS-BUILT DRAWINGS.
This drawing has been revised to
show systems as installed
(Signature of Contractor) (Date).

.8 The site services drawings are to include the signature and stamp of the accredited surveyor adjacent to the note.

.9 Submit one (1) set of white prints of the draft as-built CAD files for Consultant’s review.

.10 Once “AS BUILT DRAWINGS” white prints are reviewed, transfer Consultant's comments to the CAD files. Return CAD files modified to “As Built” condition to Consultants electronically by removable mass storage device or by electronic file transfer as designed by the Consultant.

.11 Submit three (3) sets of white prints and one (1) electronic copy of CAD files with Operating and Maintenance Manuals to the Owner.

19 OPERATING AND MAINTENANCE INSTRUCTIONS

19.1 Operating and Maintenance Manuals

.1 Provide operating and maintenance manuals in accordance with Section 01 78 00 *Closeout Submittals* and as follows.

.2 Provide operation and maintenance data bound in vinyl covered, hard back, three-ring covers, nominally 50 mm (2 in) thick, suitable for paper size of 210 mm x 300 mm (8½ in x 11 in);

.1 organize material in volumes, generally grouped by Trade section;

(a) Table of Contents,

(b) General Information,

(c) Sub-contractors (list),

(d) Site services,

(e) Fire Protection,

(f) Plumbing,

(g) Heating and Cooling Plant and Distribution,

(h) Air Handling Equipment and Distribution,

(i) Building automation, Controls and Instrumentation,

(j) Testing Reports,

(k) As-Built Drawings,

(l) Warranties.

.2 Title sheet in each volume to be labeled "Operating and Maintenance Manual" and to bear;

(a) Project Name,

(b) Project Number,

(c) Date,

(d) Trade Section,

(e) List of Contents.

.3 Provide three hard-copies to Owner.

.3 In addition, provide PDF files for each document, produced from original direct-to-digital file creations;

.1 organize documents into separate PDF files for each Trade Section identified above, and apply PDF Bookmarks to create a Table of Contents for each file.

.4 Operating data to include;

.1 control schematics for each system,

.2 description of each system and associated control elements,

.3 control operating sequences at various load conditions, reset schedules and anticipated seasonal variances,

.4 operating instructions for each system and each component,

.5 description of actions to be taken in event of equipment failure,

.6 valve schedules and flow diagrams,

.7 service piping identification charts.

.5 Maintenance data to include;

.1 manufacturer's literature covering servicing, maintenance, operating and trouble-shooting instructions for each item of equipment,

.2 fault locating guide,

.3 manufacturer's parts list,

.4 reviewed shop drawings,

.5 equipment manufacturer's performance sheets,

.6 equipment performance verification test results,

.7 voltage and ampere rating for each item of electrical equipment,

.8 spare parts list and an itemized cost,

.9 name and telephone numbers of service organization and technical staff that will provide warranty service on the various items of equipment.

.6 Approval procedure;

.1 submit one set of first draft of Operating and Maintenance Manuals for approval at least one month prior to planned substantial performance date,

.2 make corrections and resubmit for a final review,

.3 review contents of Operating and Maintenance Manuals with Owner's operating staff or representative to ensure thorough understanding of each item of equipment and its operation.

.4 hand-over two (2) hard-copies and one (1) PDF copy on removable storage device of the Operating and Maintenance Manuals to the Owner's operating staff and obtain written confirmation of delivery. Provide a copy of the delivery record to the Consultant.

19.2 Operating and Maintenance Training

.1 Provide operating and maintenance training in accordance with Section 01 79 00 *Demonstration and Training* and as follows.

.2 Provide training to Owners operations staff to thoroughly explain operation and maintenance of each system, incorporating specialized instruction by manufacturers as described under other Sections in these Divisions. Include classroom instruction and hands-on instruction, delivered by competent instructors.

.3 Develop the proposed training plan, and submit an outline of the training program for review, adjustment and approval by the Owner.

.4 Structure each session to start with the classroom instruction for the overall system, followed by hands-on instruction for each equipment, utilizing the services of the manufacturers' representative as required.

.5 Organize and schedule each training session to deliver the required instruction in an efficient and effective manner on a schedule agreed upon with the Owner. Allow for two (2) training sessions for each training topic, separated by approximately one week each. Develop the proposed training plan and obtain approval from the Owner before commencing training.

.6 All training to be scheduled and provided between the hours of 7 am to 5 pm, Monday to Friday. Where training is required to be performed outside of these hours due to availability of Owners operations personnel, if the trainers are paid for overtime outside of these hours, the overtime portion only is eligible to be paid by the Owner as an extra cost.

.7 Complete the training as close to Substantial Performance as possible, so that the operations staff are prepared to operate the systems after Substantial Performance is certified.

.8 Organize each training sessions as follows:

.1 Fire Protection - Division 21

.2 Plumbing – Division 22

.3 HVAC – Division 23

.4 Building Management System – Division 25

.9 Keep records of date and duration of each instruction period together with names of persons attending. Submit signed records at completion of instruction.

.10 For each training session, include the following topics;

.1 general purpose of system (design intent),

.2 use of O&M manuals,

.3 review of control drawings and schematics,

.4 start-up, normal operation, shutdown, unoccupied operation, seasonal changeover, manual operation, control set-up and programming troubleshooting, and alarms,

.5 interaction with other systems,

.6 adjustments and optimizing methods for energy conservation,

.7 health and safety issues,

.8 special maintenance and replacement sources,

.9 occupancy interaction issues, and

.10 system response to different operating conditions.

.11 Develop and provide training material, including printed documents and electronic presentation aids (e.g. MS PowerPoint) for each session. Submit three (3) copies of materials in both hardcopy and PDF format, in accordance with article on Operating and Maintenance Manuals.

.12 Sessions may be video recorded by the Owner as an aid to ongoing training of Owners staff.

20 CARE, OPERATION AND START-UP

.1 Provide all labour and materials as necessary to perform start-up and testing of equipment and systems.

.2 Arrange and pay for services of manufacturer's factory service technician to supervise start-up of the installation, check, adjust, balance and calibrate components and equipment as specified in the specification sections of Division 20.

.3 Provide these services for such period, and for as many visits as necessary to put equipment in operation, and ensure that operating personnel are conversant with every aspect of the operation, care and maintenance thereof.

.4 Arrange and pay for services of applicable manufacturer's factory service engineer or certified independent testing organization to supervise initial start-up of specialized portions of installation and to check, adjust, balance and calibrate components including related wiring and controls. Provide these services for such periods, and for as many visits as may be necessary to put applicable portion of the installation in complete working order. Provide a certificate indicating that the equipment is free and clear of deficiencies.

21 TESTING

21.1 General

.1 The following describes the general requirements for testing of mechanical systems; refer to additional testing requirements in applicable sections of Division 20 of the Work.

.2 Conduct tests during progress of Work and at its completion to verify equipment and systems meet the contract documents. Submit details of test methods in writing and obtain approval before commencing work.

.3 Supply test equipment, apparatus, gauges, meters and data recorders, together with skilled personnel to perform tests and log results.

.4 Submit written notice 24 hours in advance of each test series, setting out the time, place and nature of the tests, to the Inspection Authority and personnel witnessing tests.

.5 The Owner reserves the right to witness any test; any such witnessing activity shall not be construed as acceptance of the system or equipment by the Owner.

.6 Conduct tests before application of external insulation and before any portion of pipes, ducts or equipment is concealed.

.7 Do not subject expansion joints, flexible pipe connections, meters, control valves, heat exchangers, terminal heating and cooling equipment, and fixtures, to test pressures greater than the stated working pressure of equipment. Isolate or remove equipment or devices during tests when prescribed test pressure is greater than working pressure of any piece of equipment or device.

.8 Should section of pipe, duct, or electrical cable fail under test, replace faulty piping, duct, or cable with new fittings, pipe, duct or cable and then retest. Do not repair threaded pipe joints by caulking nor welded joints by peening. Repeat tests until results are satisfactory.

.9 Where it is necessary to test portions of piping, ductwork or electrical cable system before system is complete, overlap successive tests so that no joint or section of duct or pipe is missed in testing.

.10 Upon completion of work and testing of same, submit logs to demonstrate that tests have been carried out satisfactorily. Repeat any tests if requested.

21.2 Testing of Integrated Life Safety and Fire Protections Systems

.1 Conduct testing of integrated life safety and fire protection systems in accordance with specification Section 20 08 11 *Testing of Integrated Electrical Life Safety and Fire Protection Systems*.

21.3 Testing and Disinfection - Potable Water Piping

.1 Except where otherwise specified in other sections of Division 22, test potable water systems with water or air as required by the plumbing code in effect at the location of the Work.

.2 For water service pipes 100 mm (4") and larger, disinfect the pipe with chlorine (“hyper-chlorinate”) from the street valve to the first shut-off valve inside the building. At completion of disinfection, take water samples just before the utility meter and pay for the samples to be tested by an accredited testing laboratory. Test the water samples for contaminants and to measure the residual chlorine concentration and provide test certificate confirming water contaminates are below the threshold values proscribed by applicable legislation.

.3 Where stainless steel piping is used in the domestic water system, between the entry point in the building and the utility water meter, after taking the water sample for laboratory testing, immediately drain down the incoming service piping up to the utility meter and then flush with clean city water until a site test of the drain water shows a residual chlorin level not greater than the incoming city water supply.

.4 Except where disinfection of stainless steel piping and tubing is required in other Specification sections of Division 22, do not allow chlorination levels for disinfection in excess of 10 ppm to come into contact with stainless steel piping or tubing.

21.4 Testing - Other Piping

.1 Except where otherwise specified in other sections of Divisions 21, 22 or 23, hydraulically pressure test other water piping systems at 1½ times system design pressure (relief valve setting) or 1000 kPa (150

psi), whichever is greater, for 10 minutes then reduce the test pressure and hold for 24 hours. Pressure must remain essentially constant throughout test period without pumping. Make allowance for correction of pressure readings for variations in ambient temperature between start and finish of test.

.1 Alternatively, hold the pressure at the design pressure and testing all joints with a soap test.

.2 Test natural gas system in accordance with CSA B149.1 *Natural Gas and Propane Piping Code.*

.3 Test fuel oil systems in accordance with CSA B139 *Installation Code for Oil Burning Equipment.*

.4 Test drainage, waste and vent piping for tightness and grade as required by the plumbing code in effect at the location of the Work.

.5 Test special service piping as detailed in other sections of Divisions 21, 22 and 23.

21.5 Testing - Ventilation

.1 Pressure test ductwork in accordance with section 23 31 13 *Ductwork*, or other applicable sections of Division 23.

21.6 Testing - Electrical

.1 Make tests of equipment and wiring. Test wiring systems in accordance with section 20 05 12 *Wiring Requirements for Mechanical*.

.2 Replace defective equipment and wiring with new material.

22 TEMPORARY AND TRIAL USAGE

.1 Temporary and trial usage by Owner of any mechanical or electrical device, machinery, apparatus, equipment or any other work or materials before final completion and written acceptance is not to be construed as evidence of acceptance by Owner.

.2 Owner to have privilege of such temporary and trial usage, as soon as that said work is claimed to be completed and in accordance with Contract Documents, for such reasonable length of time as is sufficient for making complete and thorough test of same.

.3 No claims will be considered for damage to or failure of any parts of such work so used which may be discovered during temporary and trial usage, whether caused by weakness or inaccuracy of structural parts or by defective materials or workmanship of any kind whatsoever.

.4 Defects in workmanship and materials identified during temporary and trial usage are to be rectified under warranty.

23 SPECIAL TOOLS AND SPARE PARTS

23.1 Spare Parts

.1 Prior to application for Substantial Performance, furnish spare parts as follows;

.1 one set of mechanical seals for one pump of each model size,

.2 one pump casing joint gasket for each model size,

.3 one head gasket for each shell-and-tube heat exchanger with removable heads,

.4 one glass for each gauge glass,

.5 one set of V-belts for each drive of the same model size,

.6 one set of filter cartridges for each filter or filter bank installed.

.2 Maintain an inventory record and delivery receipt record of spare parts delivered to the Owner, and include them in the Operating and Maintenance manuals.

24 CONSULTANT REVIEWS

24.1 General

.1 Consultant's attendance at site including but not limited to site meetings, demonstrations, site reviews and any resulting reports are for the sole benefit of the Owner and as required by the local authority have jurisdiction. It is the Contractor's responsibility to ensure that the Work is complete and constructed in accordance with the design documents.

24.2 Site Reviews

.1 General reviews and progress reviews do not record deficiencies during the course of the Work until such time as a portion or all of the work is declared complete. In some instances, before the work is completed, readily noticeable deficiencies may be recorded by the Consultant where the deficient item is indicative of issues such as poor workmanship, incorrect materials or installation methods, or may be difficult to correct at a later date. Any such reported items, or lack thereof, shall not be relied on in any way as part of the Contractors quality assurance program nor relieve the Contractor in the performance of the Work, specifically in identification and rectification of deficiencies or incomplete Work.

.2 Deficiency reviews conducted by the Consultant are performed on a sampling basis, and any deficiency item is to be interpreted as being indicative of similar locations elsewhere in the Work, unless otherwise shown.

24.3 Milestone Reviews

.1 Specific milestone reviews may be conducted at key stages by the Consultant, including;

.1 before backfilling of buried drainage,

.2 before closing of shafts,

.3 before closing of ceilings,

.4 before closing of walls,

.5 equipment demonstration,

.6 Substantial Performance deficiency review,

.7 Total Performance deficiency review.

.2 Coordinate with the Consultant the type and quantity of milestone reviews required by the Consultant and incorporate these requirements in the construction schedule.

.3 Notify the Consultant in writing seven (7) calendar days in advance of work to be concealed to arrange a site review prior to the Work being concealed where required by the Consultant. Any noted deficiencies are to be corrected before being concealed. Failure to provide notification can result in the Work being exposed for review at the Contractor's cost.

24.4 Partial Occupancy Reviews

.1 Where the Work is planned to include occupancy by the Owner of a part of the Work but not the entire Work ("partial occupancy"), the procedures specified for Substantial Performance Review will apply to the portion of the Work being considered for partial occupancy.

24.5 Substantial Performance Review

.1 At the time of applying for project Substantial Performance, submit to Consultant a comprehensive list of items to be completed or corrected.

24.6 Final Review

.1 At project completion submit written request for final review of mechanical and electrical systems. Refer to section 20 08 19 *Project Close-Out.*

.2 Include with the request a written certification that:

.1 reported deficiencies have been completed,

.2 systems have been balanced and tested and are ready for operation,

.3 completed maintenance and operating data have been submitted and approved,

.4 equipment/line material tags are in place and equipment identification is completed,

.5 cleaning is finished in every respect,

.6 all mechanical equipment surfaces have been touched up with matching paint, or re-finished as required,

.7 spare parts and replacement parts specified have been provided and receipt acknowledged,

.8 As-built and Record drawings are completed and approved,

.9 Owner's operating personnel have been instructed in operation and maintenance of systems,

.10 fire protection verification is 100% completed and Verification Certificates have been submitted and accepted.

25 CONTRACTOR INSPECTIONS

25.1 General

.1 The Division 20 contractor shall assign one person responsible for ensuring that Work from all mechanical trades is complete prior to;

.1 closing in wall, ceilings or burying of services,

.2 partial-occupancy reviews, and

.3 substantial performance reviews.

.2 In conjunction with the Contractor’s Mechanical and Electrical sub-contractors, the Contractor shall walk the site and thoroughly inspect that the work is complete, in good workmanship and installed according to the contract documents and derived documents therefrom. The Contractor shall then submit a report attesting to the completed state of the Work (the “Statement of Completion” report, as detailed later in this part).

.3 In the case of Contractor inspections for partial-occupancy or substantial performance, submit the Statement of Completion report at least 24 hours prior to the scheduled review by the Consultant.

25.2 Concealed Space Digital Image Records

.1 Where services are to be concealed behind walls, ceilings, or buried, the Contractor shall make a digital photo or digitally scanned record of the Work, and assemble these digital records in a logical file structure, organized by floor or department, with each record filename including the room number, so as to form a comprehensive documentation of the completed services.

.2 The digital files and folders are be turned over to the Consultant for review prior to the Consultant’s reviews for partial- occupancy or substantial performance.

.3 As part of the request for substantial performance of the Work, submit two (2) copies of the digital record on separate removable storage devices to the Owner for their use. These records are in addition to other construction records including as-built documentation.

25.3 Contractor Inspections for Partial Occupancy and Substantial Performance

.1 In preparation for the Consultants general review for partial-occupancy and/or substantial performance of the Work, the Contractor shall perform a comprehensive inspection of the Work to ensure that their contractual obligations are met before requesting a Consultant's review of the Work. In performing this inspection, the Contractor shall create a Statement of Completion report which is to include;

.1 date and time of the Contractor's inspection, signed by the person who conducted the inspection,

.2 names of the mechanical contractor's personnel who participated in the inspection,

.3 confirmation that previously noted deficiencies have been completed,

.4 confirmation that the work is 100% complete, tested, balanced and free of deficiencies, or include a list of outstanding deficiencies and incomplete Work with;

(a) a reason why the Work has not been completed (i.e. another trade has to complete their work)

(b) a plan of action to complete the Work, and

(c) a commitment date for completion of the Work including rectification of all deficiencies.

.2 The format of the Statement of Completion shall be approved by the Consultant.

.3 The Consultant shall review and sign-off the Statement of Completion Report and return a copy to the Contractor. The Contractor shall retain on-site a log of all signed off Statement of Completion reports.

.4 If a required Statement of Completion report is not received, the Consultant reserves the right to withhold conducting a review for partial-occupancy or substantial performance.

.5 After receipt of the Contractor's Statement of Completion report, if upon entering an area of the work covered by the Statement of Completion report the Consultant determines, in its sole opinion, that the applicable Work is not ready for review, the Consultant may elect to cancel the review of the Work or the affected portion of the Work, and shall assume no responsibility for any damages or losses as a result of cancellation of the review. The Contractor shall remedy the incomplete work and request another review with 72 hours prior written notice, and shall resubmit the revised Statement of Completion at least 24 hours prior to the new review.

26 CORRECTION AFTER COMPLETION

.1 At completion, submit a written warranty undertaking to remedy defects in work for a period of one year from date of substantial performance of the Work. This warranty is not to supplant other warranties of longer period called for on certain equipment or materials.

.2 Warranties are to encompass replacement of defective parts, materials or equipment, and to include incidental fluids, gaskets, lubricants, supplies, and labour for removal and reinstallation of the corrected Work.

.3 Submit similar warranties for one year from date of acceptance for any part of work accepted by Owner, before completion of the whole Work.

27 ATTACHMENTS

27.1 Schedule of Values Form

.1 Attached sample of the Schedule of Values form layout.

27.2 Shop Drawing Submittal Form

.1 Attached sample of shop drawings submittal form.

SCHEDULE OF VALUES

Project Name: <<name of project>>
Owner Name: <<owner name>>
Contractor Name: <<name of trade contractor: mechanical, electrical, etc>>
Division(s) of the Work: <<i.e. 20, 21, 22...>>
For the billing period ending: dd-mmm-yyyy

This sheet is an example of a required schedule of values to be developed by the Contractor, to be submitted with each progress payment request.

Specifiel level of detail for each work element to be approved by the Consultant.

Item	Base Contract Element	Contract Value		Complete to Date		Previsosly Billed		This Billing		Balance to Complete	
		$	%	$	%	$	%	$	%	$	%
1.1	<<work element>>	1,000,000.00	65.9%	400,000.00	40.0%	225,000.00	22.5%	175,000.00	17.5%	600,000.00	60.0%
1.2	<<work element>>	250,000.00	16.5%	30,000.00	12.0%	5,000.00	2.0%	25,000.00	10.0%	220,000.00	88.0%
1.3	<<work element>>	125,000.00	8.2%	50,000.00	40.0%	22,000.00	17.6%	28,000.00	22.4%	75,000.00	60.0%
X.X	Itemized Price No. 1	25,000.00	1.6%	0.00	0.0%	0.00	0.0%	0.00	0.0%	25,000.00	100.0%
X.X	Separate Price No. 1	12,500.00	0.8%	5,000.00	40.0%	0.00	0.0%	5,000.00	40.0%	7,500.00	60.0%
CCA.1	Cash Allowance Disbursements Summary	75,000.00	4.9%	34,000.00	0.0%	8,000.00	0.0%	26,000.00	0.0%	41,000.00	0.0%
X.X	Coordination drawings	15,000.00	1.0%		0.0%		0.0%		0.0%		0.0%
X.X	As-built doucmens and operating manuals	15,000.00	1.0%		0.0%		0.0%		0.0%		0.0%
	Original Contract Values	1,517,500.00	100.0%	519,000.00	34.2%	260,000.00	17.1%	259,000.00	17.1%	968,500.00	63.8%
CO.1	Approved Changes Summary	13,400.00		5,200.00	38.8%	2,000.00	14.9%	3,200.00	23.9%	8,200.00	61.2%
	Total Current Contract Values	**1,530,900.00**		**524,200.00**	**34.2%**	**262,000.00**	**17.1%**	**262,200.00**	**17.1%**	**976,700.00**	**63.8%**

Reference	Cash Allowance Disbursement	CA Value	Complete to Date		Previsosly Billed		This Billing		Balance to Complete	
		$	$	%	$	%	$	%	$	%
CAA_1	<<description of cash allowance>>	20,000.00	20,000.00	100.0%	8,000.00	40.0%	12,000.00	60.0%	0.00	0.0%
CAA_2	<<description of cash allowance>>	55,000.00	14,000.00	25.5%	-	0.0%	14,000.00	25.5%	41,000.00	74.5%
				0.0%		0.0%	0.00	0.0%	0.00	0.0%
	Total	75,000.00	34,000.00	45.3%	8,000.00	10.7%	26,000.00	34.7%	41,000.00	54.7%

Reference	Approved Changes	Change Value	Complete to Date		Previsosly Billed		This Billing		Balance to Complete	
		$	$	%	$	%	$	%	$	%
CO_01	<<description of change of work>>	5,800.00	-	0.0%	-	0.0%	0.00	0.0%	5,800.00	100.0%
CD-01	<<description of change of work>>	7,600.00	5,200.00	68.4%	2,000.00	26.3%	3,200.00	42.1%	2,400.00	31.6%
				0.0%		0.0%	0.00	0.0%	0.00	0.0%
	Total	13,400.00	5,200.00	38.8%	2,000.00	14.9%	3,200.00	23.9%	8,200.00	61.2%

Reference	Unquoted/Unapproved Changes	Status	Quotation
			$
CCN=01	<<description of change of work>>	Waitinf for approval	12,000.00
CCN-02	<<description of change of work>>	Unquoted	
	Total		12,000.00

HHAngus Toronto Montreal Vancouver Dallas Chicago

SHOP DRAWING SUBMITTAL

Include this cover page with each shop drawing submission.
Submissions without this form will be returned without review.
Submit one submittal form per shop drawing; do not group under one submittal sheet

Client/Architect: Click or tap here to enter text.

Project Name: Click or tap here to enter text.

HHA Project No: Click or tap here to enter text.

Contractor to complete the following for each submission.

Date: _____

Contractor Name: _____ Ref. No: _____

Manufacturer Name: _____

Product Type/Description: _____

Specification section number: _____

Contractor Trade Category:

☐ Architectural ☐ Structural ☐ Conveying Equipment ☐ User Equipment
☐ Mechanical ☐ Electrical ☐ Telecommunications ☐ Civil
☐ Other

If this is a resubmission, check here: ☐

Previous submission HHA reference no.: _____

hhangus.com

CANADA'S BEST MANAGED COMPANIES

END OF SECTION

QUALIFICATIONS AND AUTHORITIES - ONTARIO
20 01 02

1 GENERAL

1.1 Scope

.1 This specification section:

.1 describes the qualification requirements for tradesmen in the province of Ontario;

.2 defines the applicable authorities having jurisdiction related to construction in Ontario; and

.3 describes the responsibilities of the contractor and/or Owner for registration and inspection of systems and application for construction or installation permits.

1.2 Definitions

.1 ***TSSA***: Technical Standards and Safety Authority

.2 ***ESA***: Electrical Safety Authority

2 QUALIFICATIONS

2.1 Trades Qualification and Apprenticeship

.1 Tradesmen to hold a a certificate of qualification or be an apprentice in accordance with the *Building Opportunities in the Skilled Trade Act*, 2021, S.O. 2021, c. 28, including but not limited to the following prescribed trades in accordance with the *Prescribed Trades and Related Matters* regulation O.Reg. 876/21:

.1 Construction Millwright,

.2 Electrician – construction and maintenance,

.3 Fuel and electrical systems technician,

.4 Heat and frost insulator,

.5 Information technology – hardware technician,

.6 Information technology – network technician,

.7 Network cabling specialist,

.8 Instrumentation and control technician,

.9 Plumber,

.10 Refrigeration and air-conditioning systems mechanic,

.11 Sheet metal worker,

.12 Sprinkler and fire protection installer,

.13 Steamfitter,

2.2 Work-Specific Qualification Licenses

.1 Fabricators and installers of pressure piping and equipment which are subject to O.Reg. 220/01 *Boilers and Pressure Vessels* regulation shall hold the required license for performing such work, unless otherwise exempt by the regulation.

.2 Contractors performing work on liquid or gaseous fuel piping systems and related equipment shall hold certificates of authorization made under O.Reg. 215/01 *Fuel Industry Certificates* to perform work within the scope of the following regulations:;

.1 Gaseous Fuels, O.Reg. 212/01

.2 Propane Storage and Handling, O.Reg. 211/01

.3 Fuel Oil, O.Reg. 213/01

.4 Compressed Natural Gas, O.Reg. 214/01

3 AUTHOURITIES

3.1 Authorities having Jurisdiction

.1 When referenced in specification sections in Division 20 to 25, the authority-having-jurisdiction (“AHJ”) over regulated portions of the work are identified in the following table.

Work Element	Authority	AHJ Abbreviation
Fire Protection	Municipal Building Department or Fire Department	None
Plumbing	Municipal Building Department	None
HVAC	Municipal Building Department	None
Flammable and Combustible Liquids	Fire Department	None
Liquid fuels (for vehicle refueling)	Technical Standards and Safety Authority	TSSA
Heating Oil and Diesel Fuel	Technical Standards and Safety Authority	TSSA
Propane	Technical Standards and Safety Authority	TSSA
Pressure Piping	Technical Standards and Safety Authority	TSSA
Refrigeration	Technical Standards and Safety Authority	TSSA
Licensed Plant Operators	Technical Standards and Safety Authority	TSSA
Electrical	Electrical Safety Authority	ESA

4 PERMITS, REGISTRATION AND INSPECTION

4.1 Building Code Permits

.1 Submit and pay for building permits, and arrange and coordinate for inspections as required under the Ontario Building Code.

4.2 Other Work Permits, Registration and Inspection

.1 Arrange, provide documentation, and pay for permits, registration, and inspection of the following work elements:

.1 Boilers, pressure vessel and pressure piping,

.2 Buried liquid fuel tanks and underground piping,

.3 Electrical work performed under Division 20 to 25, and

.4 Where described elsewhere in Division 20 to 25.

.2 Arrange, provide documentation, and pay for variance approvals and field inspections where specified elsewhere in Division 20 to 25.

END OF SECTION

Master revised: 13 September 2023

MECHANICAL COORDINATION AND INSTALLATION DESIGN SERVICES
20 01 03

1 GENERAL

1.1 Scope

.1 Provide detailed coordination, fabrication, and installation design drawings for the services provided under Division 20. Integrate the coordination drawings provided under Division 26 into the design drawings provided under Division 20.

.2 Provide the services of an experienced mechanical and electrical coordination supervisor to manage these contractors' design services. The supervisor is responsible for leading a multi-trade coordination effort including but not limited to: detailed inspection of existing conditions, layout and finalize routing of services, setting sleeves for structural openings and sequencing of service installation.

1.2 Document Ownership

.1 Ownership and copyright of Contractors coordination, fabrication, and installation design drawings remains with the Contractor producing these documents, subject to the requirements of the project construction contract. In the absence of any requirements in the project construction contract, the Contractor will provide the Owner with a royalty-free, transferrable, and irrevocable license to copy and use the materials for the purpose of operating and maintaining the building and building systems.

1.3 Consultant Drawings

.1 Consultant drawings are diagrammatic and illustrate the general location of equipment, and intended routing of ductwork, piping, bus duct, etc., and do not show every structural detail. In congested areas drawings at greater scale may be provided to improve interpretation of the Work. Where equipment or systems are shown as "double line", they are done so either to improve understanding of the Work, or simply as a result of the use of a CAD drawing tool, and in either case such drawings are not represented as fabrication or installation drawings.

.2 The use of Consultant's drawings directly for construction, without preparation of Contractor detailed coordination, fabrication, and installation design drawings, is at the Contractors risk.

1.4 Requests for Information

.1 Requests for Information (RFI's or similar type of document) concerning coordination are to be submitted with sketch drawings indicating proposed solution for review by the Consultant. RFI's submitted without such proposals may be returned by Consultant for re-submission to include proposed resolution.

2 WORK RESTRICTIONS

.1 Refer to specification section 01 14 00 *Work Restrictions*.

3 INTERFERENCE CO-ORDINATION DRAWINGS

3.1 General

.1 Take information involving accurate measurements from dimensioned Architectural Drawings or at building.

.2 Install services and equipment which are to be concealed, close to building structure so that furring is kept to minimum dimensions.

.3 Location of equipment and associated service connections are diagrammatic and based on manufacturer information available at the time of design. Include suitable allowances for and make adjustments to installation of actual equipment, including but not limited to size of housekeeping pads, methods of support, routing of pipe, duct, conduit and other services around and to the equipment, and location of services connection points to the equipment, at no change to the Construction Price.

.4 Location of pipes, ductwork, raceways and equipment may be altered without extra cost provided instruction is given or approval is obtained, in advance of installation of items involved. Changes will be authorized by site instructions and are to be shown on Record Drawings.

.5 Location of floor drains, hub drains, combination drains, plumbing fixtures, convectors, unit heaters, diffuser, registers grilles and other similar items may be altered without extra cost provided instruction is given prior to roughing in. No claim will be paid for extra labour and materials for relocating items up to 3 m (10 ft) from original location nor will credits be anticipated where relocation up to 3 m (10 ft) reduces material and labour.

.6 Include incidental material and equipment not specifically shown but which is needed to complete the work as an operating installation.

.7 Make good damage to Owner's property or to other trade's work caused by inaccurate layout or careless performance of work of this Division.

3.2 Interference Coordination Drawings

.1 Prepare interference coordination drawings to show location of equipment and relative position of services, and to demonstrate coordination with works of other trades. Drawings shall be prepared by a specialist firm experienced in CAD mechanical and electrical interference drawing production. Interference drawings are to include coordination with all mechanical and electrical services.

.2 Mechanical contractor is to consult and co-operate with electrical contractor to identify electrical services which are to be incorporated into interference drawings. Contractor shall perform site survey work to document all existing mechanical and electrical services that are to remain and are to be included in the interference drawings.

.3 Conduct weekly meetings to discuss and resolve interference issues discovered during interference drawing production.

.4 Submit drawings to other trades involved in each area and include a note in the drawing title block as follows;

.1 “This drawing was prepared and circulated for review and mark-up to related subcontractors as noted and initialed in the table below. Corrections and concerns identified through this coordination process have been addressed on this drawing. Areas that incorporate significant changes from layouts shown on Contract Documents have been circled for Consultants’ general review”

.2 Drawing scale to be minimum 1:50 (1/4"=1'-0").

.3 Produce three-dimensional (“3D”) coordination drawings, preferably in AutoCad MEP or Revit format, and keep a set of drawings on site for Consultant’s general review.

.4 Obtain Consultant’s drawing files for background information, pending completion and return of any electronic file waiver forms.

3.3 Coordination with Other Trades

.1 Lay out and coordinate Work to avoid conflict with work under other sections of this Division and other Divisions.

.2 When equipment provided under other Sections or Divisions connects with material or equipment supplied under this Section, confirm capacity and ratings of equipment being provided.

3.4 Interconnecting Control and Power Wiring

.1 Provide wiring block diagrams and detailed termination drawings for controls wiring connections to equipment and instrumentation, for both Building Automation System control and hard-wired interlock wiring. Provide wiring terminal numbers specific for each equipment connection.

.2 Maintain these interconnection drawings through the course of the Work and include a final updated version with the Operating and Maintenance instructions.

3.5 Fire Alarm and Building Automation System

.1 Provide a wiring coordination interface drawing for termination of fire alarm annunciation circuits to Building Automation System I/O equipment and/or motor starters, adjustable frequency drives, dampers, and motorized fire dampers.

.2 Drawings to include wiring terminal numbers and description label for FAS annunciation zone.

.3 Submit interface drawings as a shop drawing for Consultants review.

.4 Maintain these interconnection drawings through the course of the Work and include a final updated version with the Operating and Maintenance instructions.

4 OWNERS EQUIPMENT AND RELOCATED EQUIPMENT

.1 The service provisions shown for Owner's supplied equipment and/or relocated equipment is based on the available information at the time of design. Examine the actual service requirements for this equipment and make adjustments as necessary to connection sizes of service drops to suit. A change (increase or decrease) in one trade size for piping, tubing, electrical conductors and conduit, and a change of up to 25% in duct cross-sectional area will be provided at no change to the construction cost.

.2 Where actual service requirements (except as described above for size) are different between the Consultant's drawings and Owner's equipment requirements, submit proposal for new or deleted services or capacities to the Consultant for review.

5 FABRICATION AND INSTALLATION DRAWINGS

.1 On an as-needed basis, prepare fabrication, spooling, and/or installation drawings based on the completed interference coordination drawings. Such drawings are to be in accordance with Contractor's company standards.

.2 Drawing scale: same as the interference coordination drawings or at larger scale as needed.

.3 Use information from manufacturer's shop drawings for each trade and figured dimensions from latest Architectural and Structural Drawings.

.4 Layout equipment and services to provide access for repair and maintenance.

END OF SECTION

DEFINITIONS AND ABBREVIATIONS - MECHANICAL
20 01 13

1 GENERAL

1.1 Scope

.1 This specification provides definitions and abbreviations of terms which may apply to one or more specification sections under Division 20, 21, 22, 23 and 25.

.2 Additional definitions and/or abbreviations may also be included in other specification sections where they apply only to one specification section.

1.2 Definitions

.1 General definitions:

Authourity having Jurisdiction ("AHJ"): the designated government body or regulatory agency responsible for enforcement of applicable statute.

Bronze: a copper alloy with a minimum copper content of 84%.

Building Automation System ("BAS"): the building control systems as specified in Division 25.

Class XXX: a numerical pressure-temperature designation "XXX" in accordance with ANSI/ASME B16 series of standards.

Canadian Registration Number ("CRN"): as defined in accordance with CSA B51.

Certificate of competency: a license, certificate or other document which attests to the qualifications of a construction tradesperson and which is recognized and/or required under prevailing provincial, territorial or federal statutes in the location of the project as an authorization to perform such work.

Cold Working Pressure ("CWP"): the maximum non-shock cold working pressure at temperatures as stated in a MSS valve standard.

Design Criteria: criteria that states the requiree performance of equipment or a system, and is also the minimum design basis for equipment, systems and contractor's design responsibilities.

Design Pressure: (in reference to a pressure piping system) - the maximum allowable internal pressure in a piping system at the indicated coincident Design Temperature that the piping system may be subjected under normal operating conditions and is the basis for determining the piping system hydrostatic or pneumatic test pressure requirements.

Design Temperature: (in reference to a pressure piping system) – the maximum allowable in-service temperature of the piping system.

Double Regulating Valve ("DRV"): a calibrated manual flow balancing valves with pressure test ports (also referred to as circuit balancing valve),

Dezincification Resistant ("DZR"): a brass copper alloy which by means of its alloy and method of manufacture is certified as being resistant to the process of dezincification.

Flow Limiting Regulating Valve ("FLRV"): an automatic calibrated flow control device which limits the maximum flow to a branch piping network.

Minimum Component Pressure Rating ("MCPR"): the minimum pressure at the indicated coincident temperature at which the component must be capable of withstanding, remain functional and not exceed its maximum allowable stress in accordance with its referenced standard.

National Pipe Taper ("NPT"): a pipe thread in accordance with ANSI/ASME B1.21.1

Operating Pressure: the estimated maximum expected internal operating pressure of a fluid in a pipe or equipment for the purpose of establishing a piping system Design Pressure; actual in-service gauge pressures may be lower. The operating pressure may be specified as a single value, or it may vary by location in the system. "Working pressure" has the same meaning.

Operating Temperature: the estimated maximum normal temperature of the fluid in a piping system

Potable water: has the same meaning as defined in the applicable plumbing code or building code in the jurisdiction of the project. "Domestic water" has the same meaning.

Steam Working Pressure ("SWP"): the maximum steam pressure at the indicated maximum steam temperature or it is the saturated steam pressure if a coincident temperature is not specified.

Service rooms: means a room provided in a building to contain equipment associated with building services, and which includes but is not limited to: boiler rooms; furnace rooms; incinerator rooms; garbage handling rooms; rooms to accommodate HVAC appliances, pumps, compressors and other related equipment; rooms containing electrical distribution equipment; and rooms containing telecommunications and data equipment.

Service space: means space provided in a building to facilitate or conceal the installation of building service facilities such as chutes, ducts, pipes, shafts or wires.

1.3 Abbreviations

AMCA	Air Movement and Control Association International
ANSI	American National Standards Institute
ASME	American Society of Mechanical Engineers
ASHRAE	American Society of Heating, Refrigeration and Air-Conditioning Engineers
ASPE	American Society of Plumbing Engineers
ASSE	American Society of Sanitary Engineers
ASTM	ASTM International (formerly American Society for Testing and Materials)
CSA	Canadian Standards Association
FM	Factory Mutual Approvals
MCAA	Mechanical Contractors Association of America
MCAC	Mechanical Contractors Association of Canada
MSS	Manufacturers Standardization Society
NECA	National Electrical Contractors Association
NEMA	National Electrical Manufacturers Association

NFPA	National Fire Protection Association
NSF	NSF International (formerly National Sanitary Foundation)
SMACNA	Sheetmetal and Air Conditioning Contractors' National Association
UL	Underwriters Laboratory (USA)
ULC	Underwriters Laboratory Canada

End of Section

Master revised: 7 June 2021

BASIC MATERIALS AND METHODS
20 05 01

1 GENERAL

1.1 Scope

.1 Articles that are of a general nature, and applicable to each Section of Division 20 to 25.

2 ACCESSIBILITY FOR BUILDING CONTROL DEVICES

.1 Mount control devices, intended to be adjusted or to otherwise be operated by the occupant for the operation of building services or safety devices, as follows:

.1 room environmental controls, including thermostats/adjustable room temperature sensors: at 1200 (47 in) above the finished floor,

.2 all other controls: between 900 and 1100 mm (36 in. and 43 in.) above the finished floor.

.3 be positioned to have a clear space in front of and centered on the control device, of 810 x 375 mm (32 x 15 in).

.4 be operable using a closed fist and with a force not exceeding 22.2 N (5 lbsf).

.2 The above requirements do not apply to control devices that are solely located and used by the building operations staff.

3 ACCESS PANELS / DOORS

3.1 General

.1 Provide access doors to be installed at locations where equipment requiring inspection, service, maintenance or adjustment is "built-in" to work of other trades.

Standard of Acceptance

° Williams Brothers – fig. GP
° Elmdor/Acorn - fig. DW
° Mifab - fig. UA

3.2 Applicable Product Standards

.1 CAN/ULC-S104 Standard Method for Fire Testing of Door Assemblies

3.3 Construction:

.1 Standard access door:

.1 1.6 mm (16 ga) carbon steel door and door-frame with white satin coat prime coat finish, with door edges turned back to frame for rigidity,

.2 flush mounted with 180° opening door, round safety corners, concealed hinges, plaster lock and anchor straps,

.3 latch: screw driver operated,

.4 access doors in ceilings, where acoustic tile is applied to plaster or gypsum board, to be dish type designed to receive tile insert.

.5 size:

(a) 600 mm x 600 mm (24 in x 24 in) for personnel entry,

(b) 300 mm x 450 mm (12 in x 18 in) for hand entry,

.2 Variations:

.1 stainless steel variant:

(a) Type 304 stainless steel with No. 4 brush satin finish.

.2 waterproof variant:

(a) Type 304 stainless steel with No. 4 brush satin finish, with neoprene gasketed door.

.3 security access variant:

(a) keyed cylinder, with all cylinders keyed alike,

.4 fire rated variant:

(a) where access door is located in a horizontal or vertical fire separation that has a fire resistance rating of 2 hours or less,

(b) insulated door with 50 mm (2 in) fire retardant mineral wool insulation, and 0.95 mm (20 ga.) back liner,

(c) heavy duty spring for self-closing door action,

(d) rated for installation in masonry walls and fire rated shaft wall construction, or fire rated ceiling construction as applicable to the installation,

(e) listed to CAN/ULC-S104 for minimum 1.5 hour closure ratings.

.5 Submit shop drawings showing access door size, type and location.

3.4 Installation:

.1 Access doors are required at;

.1 expansion joints,

.2 dampers,

.3 fire dampers,

.4 air valves,

.5 air terminal units,

.6 isolation and control valves ,

.7 pressure reducing valves,

.8 heating or cooling coils,

.9 control wiring junction boxes.

.2 Supply access doors and make arrangements and pay for installation by Division in whose work they occur.

.3 Supply access doors with the required variations in accordance with the following table:

Space Type	Wall or Ceiling Finish	Variants		
		Stainless Steel	Water-proof	Key lock
Service rooms, Service corridors,	Drywall	---	---	---

Space Type	Wall or Ceiling Finish	Variants		
		Stainless Steel	Water-proof	Key lock
Public spaces and corridors - more than 2.4 m (8 ft) above the floor, Private spaces, washrooms	Tile or other hard finished surfaces	Yes	---	---
Public spaces and corridors - 2.4 m (8 ft or less above the floor, Mental health patient areas, Public washrooms	Drywall	---	---	Yes
	Tile or other Hard Surfaces	Yes	---	Yes
Shower rooms, bathtub rooms, Pools, saunas, Kitchens, laundries, Other damp, washdown or high humidity spaces	All	Yes	Yes	Yes

.4 Provide fire rated variant in addition to the above table variants, as applicable to the wall or ceiling construction.

.5 Size and locate access doors in applied tile, block or in glazed or unglazed structural tile to suit joint patterns.

.6 Access doors are not required in removable ceilings. Provide coloured marking devices after completion of ceilings, at four corners of each panel below point requiring access. Colour code markers to show service or device above.

.7 At time of instruction of owners operating staff, hand-over and obtain signed receipt for 4 sets of each type of key used for access doors with key-lock cylinders.

4 DRAIN VALVES

.1 Provide drain points with drain valves at low points of piping systems and at section isolating valves.

.2 Drain valves:

.1 NPS ¾ drain and valve for service pipes NPS 2-1/2 and smaller, complete with hose end male thread, cap and chain,

.2 NPS 2 drain and valve for services pipes NPS 3 and larger, complete with female Camlock coupling and dustcap.

.3 Where mechanical-compression fittings are used in the piping system, use only threaded fittings for the construction of the drain piping.

5 V-BELT DRIVES

5.1 Products

.1 Provide V-belt drive for each motor driven device which is not directly connected to the motor. Keep overhung loads on prime mover shafts within manufacturer's design guidelines.

.2 Sheaves for motors 7.5 kW (10 hp) and less, with not more than two belts:

.1 cast iron or steel secured to shafts with removable keys.

.2 adjustable pitch on motor, fixed pitch on driven device, giving plus or minus 10% speed range,

.3 selected to meet specified operating condition at mid position in pitch adjustment.

.3 Sheaves for motors greater than 7.5 kW (10 hp) or drives with three or more belts:

.1 cast iron or steel with split tapered bushing and keyway.

.2 fixed pitch.

.4 Belts:

.1 matched sets of 'B' section, selected for service factor of 2.0 times installed motor horsepower.

.2 capable of carrying load with one belt broken.

.5 Motor slide rails:

.1 adjustment plates for centre line alignment

.2 belt tension adjusting screws.

5.2 Installation

.1 Tension belts to manufacturer's recommendations before start-up and after first 100 hr of operation using calibrated belt tensioning gauge.

.2 Provide replacement pulleys and belts during start-up and balancing to suit field operating conditions.

6 DRIVE AND COUPLING GUARDS

6.1 Products

.1 Provide guards to protect belt drives, flywheels, rotating couplings on equipment and fan inlet and outlets.

.2 Guards:

.1 removable for servicing,

.2 arranged to permit lubrication with guards in place.

.3 Guards for belt drives:

.1 expanded metal screen welded to steel bar stock or angle frame,

.2 minimum 1.2 mm (18 ga) thick galvanized sheet metal tops and bottoms,

.3 40 mm (1½") diameter holes at both shaft centres for insertion of tachometer.

.4 Flexible coupling and flywheel guards:

.1 Removable "U" shaped, minimum 1.6 mm (16 ga) thick galvanized mild steel or expanded metal mesh on substantial welded angle iron or round barstock frame.

.5 Guards on unprotected fan inlets and outlets:

.1 Minimum 20 mm (¾ in) galvanized wire mesh or expanded metal screen with net free area of guard not less than 80% of fan opening.

6.2 Installation

.1 Belt guards to accommodate movement of motors for belt tension adjustment.

.2 Where equipment is installed on resiliently mounted base frame or pad, attach belt guard to this base

.3 Belt guards and fan inlet guards may be omitted where fan and motor is installed in plenum less than 1.4 m (4 ft) high and disconnect for fan motor is mounted adjacent to and outside access door to plenum.

.4 Fan inlet guards may be omitted where fan is fitted with inlet guide vanes.

7 SLEEVES

7.1 General

.1 Provided sleeves for pipes, ducts and conduits passing through walls, floors and roofs.

.2 Maintain fire-resistance integrity where pipes and ducts pass through walls, floors and partitions which are or form part of a fire separation.

.3 Manufactured sleeves and integral sleeves with firestopping may be used provided they meet the same performance requirements as specified for fabricated sleeves.

Standard of Acceptance

- Hilti
- 3M
- Marfab Metal Products

7.2 Floor and Wall Sleeves – Dry Locations ("Standard Sleeves")

.1 Sleeve dimensions in floor and wall fire separations having a fire-resistance rating:

.1 For piping, insulated piping, and conduit:

(a) opening sized to suit fire stopping methods employed but in no case having an inside dimension more than 50 mm (2 in.) larger than the outside dimension of the service.

(b) sleeves may be permanent or only provided as formwork in concrete and masonry construction,

.2 For ductwork:

(a) opening sized to suit duct fire damper and/or smoke damper with clearance required for thermal expansion between the wall/floor opening and the fire/smoke damper sleeve in accordance with the fire/smoke damper manufacturer installation instructions.

(b) opening sleeves may be permanent or only provided as formwork in concrete and masonry construction,

(c) in gypsum-board construction provide permanent opening sleeves or ensure that steel-stud framing is provided to line the opening in the construction.

.3 Sleeve length – permanent type:

(a) piping: extend 25 mm (1 in.) past each face of fire separation.

(b) ductwork fire damper sleeve: as required to allow for installation of retaining angles and installation of required access door.

.2 Sleeve dimensions for all other wall and floor types (except waterproof floors):

.1 For all services:

(a) opening sized to suit the outside dimension of the service, but in no case having an inside dimension of not less than 12 mm (1/2 in.) and not more than 50 mm (2 in.) larger than the outside dimension of the service.

(b) for clarity, for insulated pipes and insulated ducts the outside dimension of the service includes the insulation thickness.

.2 Sleeve length:

(a) flush to wall/floor construction or not to extend more than 25 mm (1 in.) past each face of wall or floor construction.

.3 Sleeve construction for pipes and conduits:

.1 for all types of floor and wall construction:

(a) minimum schedule 10 steel pipe,

(b) fabricated carbon steel sheet of same thickness as schedule 10 pipe, rolled to dimension, lapped and spot welded, or

(c) as required by specific firestop system listing requirements.

.4 Sleeve construction for ducts smaller than 0.4 m^2 (4 sq ft) cross sectional area including insulation:

.1 for wall construction other than as fire separations having a fire-resistance rating:

(a) 1 mm (20 ga) minimum sheet metal, lapped and spot welded with 20 mm (¾ in) lip flange at one, or

(b) sleeves are not required where wall openings are coordinated wall construction trades which includes any duct insulation.

.2 for floors and walls that are fire separations with required fire-resistance rating:

(a) as required by fire and/or smoke damper listing.

.5 Sleeve construction for ducts of 0.4 m^2 (4 sq ft) and larger cross sectional area including insulation through walls and floors:

.1 for wall construction other than fire separations having a fire-resistance rating:

(a) 1.6 mm (16 ga) minimum sheet metal, lapped and spot welded with 20 mm (¾ in) lip flange at one end.

.2 for floors and walls that are fire separations with required fire-resistance rating:

(a) as required by fire and/or smoke damper listing.

.6 Manufactured floor sleeves with integral fire stopping:

.1 floor sleeve with integrated firestopping, for insulated and non-insulated metal pipes, and plastic pipes,

.2 for installation in concrete floors and metal deck/concrete floors,

.3 adaptors for support or pipe riser clamps,

.4 listed to CAN/ULC-S115.

Standard of Acceptance

° Hilti - fig. CP 680 series

7.3 Slot Sleeves

.1 Application:

.1 where multiple pipes or conduits are grouped together in a linear arrangement to pass through a concrete floor or wall, or masonry wall, a common slot sleeve may be used,

.2 where slot openings are not shown on structural drawings, Contractor may propose location and sizes of slot openings for approval by the structural engineer. Where such approval is denied, use individual sleeves for each pipe or conduit.

.2 Formwork:

.1 provide removable formwork or instruct the contractor under Division 03 of the Work to set formwork for the required slot dimensions prior to pouring concrete or setting of masonry units.

.3 Slot dimensions:

.1 slot sleeve dimensions, pipe and conduit sizes, and location of services within the slot are subject to firestopping listing requirements.

7.4 Waterproof Floor Sleeves - Indoors

.1 Applications:

.1 where pipes, conduits and ducts pass through floors in areas subject to water, in building service rooms, in kitchens, in washing areas and in slabs over electric and telephone rooms.

.2 Fabricated waterproof sleeves for pipes and conduits, :

.1 minimum schedule 10 carbon steel pipe with either:

(a) hot dip galvanized to ASTM A123 after fabrication, or

(b) internally and externally painted with industrial anti-corrosion paint in accordance with Specification section 20 05 02 *Painting for Mechanical Services*, or

.2 schedule 10 stainless steel pipe,

.3 provided with water bars: 75 mm (3 in.) wide annular water bar flange continuously welded to sleeve.

.3 Fabricated waterproof sleeves for ducts:

.1 fabricated carbon steel sheet sleeve, continuously welded seams and joints, with angle-channel water bar welded to side of sleeve,

(a) 1 mm (20 ga) thick for ducts of less than 0.4 m^2 (4 sq ft) cross-section area including insulation,

(b) 1.6 mm (16 ga) thick for ducts 0.4 m^2 (4 sq ft) and larger cross-section area including insulation, and for openings with multiple ducts:

.2 sleeves internally and externally painted with industrial anti-corrosion paint in accordance with Specification section 20 05 02 *Painting for Mechanical Services*,

.3 water bars:

(a) new construction, embedded into floor concrete: 75 x 75 mm (3 x 3 in.) galvanized-steel angle channel continuously welded to sleeve,

(b) existing or new construction, surface mounted: 75 x 50 mm (3 x 2 in.) carbon steel angle channel, surface mounted to top of concrete housekeeping curb.

.4 Location of water bars:

.1 placed at mid-height of floor construction thickness in new floor construction,

.2 surface mounted on and fastened to top of concrete housekeeping curb in existing buildings or in new floor construction.

7.5 Foundation Wall Sleeves

.1 For installation in poured concrete foundation walls.

.2 Manufactured foundation wall sleeves:

.1 PVC wall sleeve with 50 mm (2 in) wide water bar,

.2 sized to suit pipe OD and pipe link-seal.

Standard of Acceptance

- Metraflex

.3 Fabricated wall sleeve:

.1 Method 1:

(a) schedule 10 Type 304 stainless steel pipe with 75 mm (3 in) wide water bar welded to mid-point of sleeve,

.2 Method 2:

(a) schedule 40 carbon steel pipe with 75 mm (3 in) wide water bar welded to mid-point of sleeve,

(b) sleeves internally and externally painted with industrial anti-corrosion paint in accordance with Specification section 20 05 02 *Painting for Mechanical Services*,

.3 sized to suit pipe OD and pipe link-seal.

7.6 Roof Sleeves for Pipe and Conduit

.1 Manufactured roof sleeves:

.1 one-piece spun aluminium sleeve, minimum 1.6 mm (0.064 in) wall thickness, with integral continuous welded flashing,

.2 insulated with polyurethane insulation for hot and cold piping,

.3 with 135° gooseneck for flexible electrical conduit, with minimum clearance from gooseneck outlet to flashing flange of:

(a) minimum 300 mm (12 in) for installation on conventional roofs,

(b) minimum 450 mm (18 in) for installation on inverted roofs.

.4 with vented flashing insert and flashing cap for hot piping,

.5 with ventilation perforations at top of sleeve and a flashing cap for natural gas piping,

.6 stainless steel fasteners,

.7 EPDM base seal between conduit or pipe and bottom of sleeve,

.8 EPDM top seal, with triple pressure seal, either integral to the sleeve or as a two-piece sleeve and flashing cap,

.9 sleeve height: 300 mm (12 in),

.10 suitable for hot and cold piping, with or without pipe insulation, and rigid and flexible electrical conduit.

Standard of Acceptance

- Thaler – fig. MEF series

Application	Thaler Model
Hot piping	MEF-3A
Cold piping	MEF-3A
Natural gas piping	MEF-9
Rigid electrical conduit	MEF-1
Flexible electrical conduit	MEF-2A

7.7 Installation

.1 Provide sleeves for the passage of services through walls, floors and roofs in accordance with the following table:

Construction Element	Fire Resistance Rating	Element Construction	Mechanical Service	Opening Sleeve Required
Roof	Any or none	All	All	Yes
Walls	>0 hrs	Concrete, Masonry Units	Pipe and Conduit	As required for formwork
			Ductwork	As required for formwork
		Gypsum Board	Pipe and Conduit	Yes
			Ductwork	As required by fire or smoke damper listing
Wall (smoke barrier)	0 hrs	All	All	Yes, or wall tightly finished to sides of service
Acoustic Isolation Walls	None [1]	All	All	Yes
All other walls	None [1]	All	All	None unless otherwise shown
Floors	>0 hrs	Concrete	Pipe and Conduit	As required for formwork
			Ductwork	As required by fire or smoke damper listing
Waterproof Floors	Any or none	Concrete	Pipe and Conduit	Yes
			Ductwork	Yes or Curb

Notes:
[1] Walls are not fire separations of any type.

.2 Place and secure sleeves in concrete form work for floors, walls and roofs.

.3 Supply sleeves to be set in masonry walls with installation detail drawings setting out locations of sleeves.

.4 Standard sleeves:

.1 terminate flush with surfaces of concrete and masonry walls.

.2 standard sleeves may be omitted where the services pass through walls which are not fire-separations and are concealed above opaque ceilings.

.5 Waterproof sleeves in new construction:

.1 extend sleeves 50 mm (2 in.) above top of housekeeping curbs,

.2 extend sleeves 150 mm (6 in.) above finished floors where housekeeping curbs are not used,

.3 install sleeves with water bar embedded within the concrete floor or with water bar sitting on top of concrete housekeeping curb. Where mounted on top of housekeeping pad, mechanically fasten sleeve and water bar to concrete housekeeping curb.

.4 where water bars are exposed, grind smooth any edges to allow application and adhesion of floor/curb paint finishes.

.6 Waterproof sleeves in existing concrete buildings:

.1 install sleeves in neatly cut or drilled holes in existing construction,

.2 carry out cutting and drilling of structural elements, such as floors, slabs, and walls in accordance with procedure set out in Article "Cutting and Patching".

.3 provide 150 wide x 150 high mm (6 x 6 in.) housekeeping curb for each penetration.

.4 extend sleeves 50 mm (2 in.) above top of housekeeping curbs, with water bar mechanically fastened to curb,

.7 Seal the void between sleeve and service:

.1 except for sleeves for fire dampers and smoke dampers, fill void between sleeve and pipe, conduit or duct in accordance with Article "Fire Stopping and Smoke Seals" in this Section for sleeves located in fire separations,

(a) for waterproof sleeves, use firestopping material which is also suitable for exposure to water under normal operating conditions.

.2 at other locations, pack the void between sleeve and pipe, conduit or duct for full depth of sleeve, with mineral wool insulation and seal both ends with silicone-free caulking compound.

.8 Roof sleeves for pipe and conduit:

.1 install manufactured roof flashing sleeves in accordance with manufacturer instructions, specifically in accordance with requirements applicable to the type of roofing membrane requirements,

.2 where limestone ballast is used, apply asphalt or similar protective coating onto flashing sleeve to a height of 50 mm (2 in) above ballast layer.

.9 Where shown, provide floor, wall or roof sleeves for future use. Coordinate with trade contractor under Division 03 of the Work to have such sleeves filled with light weight concrete.

8 LINK SEALS

8.1 General

.1 Fit each pipe passing through floor slab in contact with ground or basement walls below grade with link seal between sleeve and bare pipe.

.2 Submit manufacturer’s literature and schedule showing location, service, inside diameter of wall opening, sleeve length and pipe outside diameter.

.3 Link seal:

.1 Manufactured from modular synthetic rubber links with stainless steel hardware.

.2 Loosely assembled with bolts to form continuous rubber belt around pipe, with pressure plate under each bolt head and nut.

.3 Constructed to provide electrical insulation between pipe and sleeve.

Standard of Acceptance

° Power Plant Supply – fig. Thunderline Linkseal

- Advance Products & Systems – fig. Innerlynx
- Metraflex - fig. MetraSeal

8.2 Installation

.1 Determine inside diameter of each wall opening or sleeve before ordering seal.

.2 Position seal in sleeve around pipe and tighten bolts to expand rubber links until watertight seal is obtained.

9 FIRE STOPPING AND SMOKE SEALS

9.1 General

.1 Provide fire stopping and smoke seals where ducts, pipes or conduits penetrate fire separations.

.2 Fire stop materials to be impervious to water when installed in a horizontal separation, including waterproof service sleeves.

.3 Firestop material manufacturer or their designated service representative to provide the following services:

.1 selection of listed fire stopping assemblies for each applicable service penetration and fire separation assembly/rating,

.2 provide training of contractor's staff for proper installation of fire stopping assembly; create and maintain a log of those personnel who obtain training,

.3 inspect the completed installation of all penetrations and submit a written report to the Consultant, including photo record of randomly selected instances of each fire stopping method. Where deficiencies are discovered, note the deficiencies in the report and provide remedial instructions to the contractor to correct the deficiency. After deficiencies are corrected, re-inspect the deficiencies to conform their correction, update and resubmit the report to the Consultant.

.4 Submit a complete fire stopping and smoke seal shop drawing schedule to the Consultant for review. Include details, cut sheets, system description and location for each proposed fire stopping and smoke sealing application.

9.2 LEED Requirements

.1 LEED v4.1 NC EQ Credit: low-emitting materials, category – sealants.

.2 Submit manufacturer product data sheets and MSDS sheets which identify compliance with this VOC content limit.

9.3 Products

.1 Materials and firestopping system to be listed for conformance with CAN/ULC-S115 "*Standard Method of Fire Tests of Firestop Systems*".

.2 Firestop systems to have F duration rating equal to the fire resistance rating of the applicable fire separation. In addition, where required by the applicable building code for the specific service penetration, the fire stop assembly shall:

.1 have a F rating equal to the fire resistance rating of the applicable fire separation with a pressure differential of 50 Pa (0.2 in.w.c.) between exposed and unexposed side with the highest pressure on the exposed side, and

.2 have an FT rating equal to the fire resistance rating of the applicable fire separation,

Standard of Acceptance

- Hilti Firestop Systems

- 3M
- Nelson Firestop Products
- Eastern Wire + Conduit (Royal Quickstop)

.3 Other manufacturers having products with explicitly similar characteristics, listings or classifications and approvals are acceptable.

9.4 Installation

.1 Install firestopping and smoke seals in accordance with the manufacturer's recommendations and in accordance with its listing.

.2 Firestopping and smoke seals to be installed only by personnel trained by the manufacturer on the installation of such systems.

.3 Seal space between penetrating service and sleeve or opening in in fire rated floors and walls with a firestop and smoke sealing system.

.4 Select thickness and arrangement of back-up materials to suit size of service, length of sleeve and anticipated movement.

.5 At time of application of materials, surfaces to be clean, dry and free from dust, oil, grease, loose or flaking paint and foreign materials.

.6 Select firestopping system to allow insulation and vapour barrier to pass un-broken through assembly.

.7 Do not apply fire stopping materials to fire or smoke dampers.

10 WALL AND FLOOR PLATES

10.1 General

.1 Provide finishing plates fitted to ducts, pipes, and electrical services provided under Division 20 of the Work which pass through walls, floors and ceilings in finished areas.

10.2 Products

.1 Escutcheons for small diameter piping and small diameter electrical conduit:

.1 manufactured chrome plated two-piece split type with hinge and set-screw.

.2 Finishing plates for ducts, larger pipes, larger electrical conduits and electrical cables:

.1 finishing plate (ring) fabricated from minimum 0.9 mm (20 ga) thick T304 stainless steel with No. 4 brushed finish, with minimum 25 mm (1 in) high collar ring,

.2 mounting holes drilled at not less than three (3) symmetrically location positions around the ring to allow mechanical fastening,

.3 plate diameter to be sufficiently sized to overlap the wall, floor or ceiling opening by not less than 25 mm (1 in) all around the opening.

10.3 Installation

.1 Escutcheons;

.1 secure escutcheons to pipe and electrical conduit with mechanical fastener.

.2 Finishing plates:

.1 set finishing plates flat against the finished surfaces, and secure to the surface with stainless steel pan-head mechanical fasteners. Provide insert anchor plugs in the finished surface as necessary to secure the fasteners.

11 PIPE SUPPORTS, EQUIPMENT SUPPORTS, AND TRENCH COVERS

11.1 General

.1 Design and fabricate supplementary supporting steel for piping, ductwork and equipment supports, and trench and pit covers, from steel plate and sections. For clarity, the contractor under these Division 20 to 25 of the Work is responsible for design, fabrication and installation of such materials.

.2 Concrete housekeeping bases for mechanical and electrical equipment which are in direct contact with floor slab, are to be provided by this Division 20.

.3 Concrete for equipment supported on vibration isolated inertia bases is to be provided by this Division 20.

.4 Work to be done by firms specializing in these fields.

.5 Submit shop drawings for steel and concrete work, prepared by Professional Engineers licensed in the jurisdiction of the Work

11.2 Applicable Codes and Standards

.1 Legislation:

.1 Ontario Building Code,

.2 R.R.O. 1990, Reg. 851 Industrial Establishments

.2 Installation codes and standards:

.1	CAN/CSA-S16.1	Limit States Design of Steel Structures.
.2	CSA W59	Welded Steel Construction (Metal Arc Welding).

.3 Product standards:

.1	ASTM A36	Standard Specification for Carbon Structural Steel
.2	ASTM A53/A53M	Specification for Pipe, Steel, Black and Hot-Dipped, Zinc-Coated Welded and Seamless.
.3	ASTM A123	Standard Specification for Zinc (Hot-Dip Galvanized) Coatings on Iron and Steel Products
.4	ASTM A 307	Specification for Carbon Steel Bolts and Studs, 60,000 PSI Tensile Strength.
.5	CAN/CSA G40.20/G40.21	General Requirements for Rolled or Welded Structural Quality Steel.

11.3 Supplementary Supports and Support Brackets

.1 Provide supplement supports and brackets for the support of equipment, piping and ductwork.

.2 Fabricate supports from structural grade steel with anchor bolts and fastenings, so that horizontal supporting beam deflections do not exceed 1/360 for the span, and not exceed an absolute deflection of 5 mm (0.20 in), with a safety factor of 1:4 to the ultimate strength of the material

.3 Design the supports in consultation with the building structural Consultant, to transfer live loads and dead loads to the building structural elements,

.4 Construct the supports as frames bracketed from walls, and/or supported from building structure above, and/or floor below.

11.4 Slide Pads for Equipment Support

.1 General:

.1 slide pads for equipment supports for equipment subject to thermal expansion,

.2 designed for continuous-weld and/or tack-welding of backing plate to the equipment support,

.3 assembled in pairs per load point.

Standard of Acceptance

° Piping Technologies & Products Inc.

.2 Composite 25% glass-filled PTFE bearing plate bonded to carbon steel backing plate:

.1 PTFE thickness: 0.1 mm (3/32 in.)

.2 backing plate: 3 mm (1/8 in.) thick carbon steel plate,

.3 compressive strength: 19.3 MPa (2800 psi)

.4 temperature rating: -45 to +260°C (-50 to +500°F)

.5 coefficient of friction: 0.15

.3 Graphite bearing plate bonded to carbon steel backing plate:

.1 graphite thickness: 13mm & 6mm (1/2 in & 1/4 in.)

.2 backing plate: 6 mm (1/4 in.) thick carbon steel plate,

.3 compressive strength: 19.3 MPa (2800 psi)

.4 temperature rating: -45 to +537°C (-50 to +1000°F)

.5 coefficient of friction: 0.15.

11.5 Trench Covers, and Pit Covers

.1 Fabricated with:

.1 75 mm x 75 mm x 9.5 mm (3 in x 3 in x ⅜ in) welded angle frame with anchor bars,

.2 25 mm x 9.5 mm (1 in x ⅜ in) trim bar to fit concrete pit, and with matching checker-plate cover,

.3 hot dip galvanized after fabrication

11.6 Installation - General

.1 Locate supporting steel to permit removal of parts for service or repair, and to allow clear access to valves, fittings, and equipment,

.2 Set equipment on supporting frames and brackets and install hangers, anchor bolts, vibration mountings and snubbers.

.3 Set equipment base plates on housekeeping pads on minimum 13 mm (½ in) epoxy grout and fill hollow portion of base with concrete.

.4 Install anchor bolts, vibration mountings and snubbers between equipment and housekeeping pad, or inertia pad and housekeeping pad.

.5 Provide anchorage, dowels, anchor clips, bar anchors, expansion bolts and shields, and toggles.

.6 Make field connections with bolts to CAN/CSA-S16.1, or by welding.

.7 Supply items for casting into concrete or building into masonry to appropriate trades together with setting templates.

.8 Touch-up field welds, bolts and burnt or scratched surfaces after completion of erection with primer.

.9 Where trench covers are cut in field or damaged, touch up with zinc rich paint.

12 INSTALLATION OF EQUIPMENT SUBJECT TO THERMAL EXPANSION

.1 The following specific installation requirements apply to hot equipment which is not supported on spring vibration isolators, including but not limited to:

.1 boilers, hot water heaters,

.2 heat exchangers,

.3 expansion tanks,

.4 deaerators and condensate tanks,

.5 diesel exhaust SCR emission control units.

.2 Fasten equipment to building structure to accommodate thermal expansion in accordance with manufacturer's instructions. In the absence of such instructions, fasten equipment support legs as follows unless otherwise shown;

.1 rigidly mechanically-fasten one fixed support point which is closest to the inlet exhaust piping connections,

.2 for supports located on the same transverse or longitudinal axis as the fixed support point, provide slide guides with lateral limit-stops (lateral to the direction of thermal movement) with a lateral clearance gap not exceeding:

(a) 6 mm (1/4 in.) lateral movement for outdoor equipment and/or equipment subject to seismic restraint,

(b) 12 mm (1/2 in.) total movement otherwise.

.3 for other support points, provide guides with two-axis horizontal limit-stops to allow free movement under thermal conditions,

.4 when installed outdoors, or where subject to seismic restraint, or both, provide vertical movement limit stops to limit free movement due to wind loading or seismic forces to not more than 6 mm (1/4 in.).

.3 Provide support slide pads beneath each support leg other than the fixed support;

.1 use PTFE slide pads for equipment with an operating temperature less than 260°C (500°F),

.2 use graphite slide pads for equipment with an operating temperature greater than 260°C (500°F).

END OF SECTION

PAINTING FOR MECHANICAL SERVICES
20 05 02

1 GENERAL

1.1 Scope

.1 Provide industrial sealer and anti-corrosion coatings for mechanical and electrical building services and related construction elements including:

.1 mechanical and electrical services and supporting elements as specified under other sections of Divisions 20 to 25,

.2 Decorative finish painting of building services is provided under Division 09.

1.2 Related Sections

.1 Without limiting the scope of work or applicability of other specification sections, the work under this section directly integrates with or refers to the following specification sections:

.1 20 01 01 Mechanical General Requirements

.2 20 05 01 Mechanical Basic Materials and Methods

.2 In addition to building elements to be painted as specified herein, refer to other Specification sections of Division 20 to 25 for other mechanical equipment to be painted.

1.3 Submittals

.1 Submit product data sheets which demonstrate compliance with LEED VOC requirements.

1.4 Applicable Codes and Standards

.1 Legislation:

.1 SOR/2009-264 Canadian Environmental Protection Act, *Volatile Organic Compound (VOC) Concentration Limits for Architectural Coatings Regulations*

.2 Installation standards and codes:

.1 LEED v4 New Construction, credit EQ Cr 4.2

.2 SSPC-SP1 Solvent Cleaning

.3 SSPC-SP2 Hand Tool Cleaning

.4 SSPC-SP11 Bare Metal Power Tool Cleaning

.5 SSPC-SP13 Surface Preparation of Concrete

.3 Product standards:

.1 Green Guard GC-03 Green Seal Environmental Criteria for Anti-Corrosion Paints

2 PRODUCTS

2.1 Industrial Anti-Corrosion Coatings – Carbon Steel Materials

.1 Outdoor applications:

.1 For carbon steel materials and structural steel support components.

.2 Top coat: Industrial urethane alkyd enamel top coat, or single compound 100% acrylic coating.

.3 Primer coat: as per manufacturers' recommendation for coating of steel piping.

.4 Colour: Sherwin Williams No. SW4027 (Galvano), unless specified elsewhere.

.5 VOC limit: 340 g/L of product less water and excluded compounds.

Standard of Acceptance

- Sherwin Williams – Pro Industrial Urethane Alkyd Enamel
- Sherwin Williams – Pro Industrial Acrylic

.2 Indoor applications:

.1 For carbon steel materials and structural steel support components.

.2 Top coat: single compound 100% acrylic coating.

.3 Primer coat: as per manufacturers' recommendation for coating of steel piping.

.4 Colour: Sherwin Williams No. SW4027 (Galvano), unless specified elsewhere.

.5 LEED: certified to Green Guard standard GC-03 for anti-corrosion coatings.

.6 VOC limit: 250 g/L of product less water, U.S. EPA method 24.

Standard of Acceptance

- Sherwin Williams – Pro Industrial Acrylic

.3 Zinc rich primer applications:

.1 For field painting of carbon steel material, or touch-up of galvanized steel material.

.2 Top coat: as specified for interior or exterior applications.

.3 Primer: single or multi-part zinc rich coating.

.4 Colour: gray-green.

.5 LEED: certified to Green Guard standard GC-03 for anti-corrosion coatings.

.6 VOC limit: 250 g/L of product less water, U.S. EPA method 24.

Standard of Acceptance

- Sherwin Williams – Zinc Clad III HS 100

2.2 Industrial Coatings – Poured Concrete

.1 For field painting of concrete floor trenches, housekeeping pads, curbs and floor areas in specified service rooms.

.1 Resistant to fuel oil, general solvents and water.

.2 Top coat: water based urethane floor enamel

.3 Primer: water based epoxy

.4 Colour: Sherwin Williams Deck Gray

.5 Colour: Sherwin Williams Safety Yellow where shown.

.6 VOC limit: 250 g/L of product less water, U.S. EPA method 24.

Standard of Acceptance

- Sherwin Williams – Armorseal Floor Plex 7100 Primer / Amorseal 1K Topcoat

3 EXECUTION

3.1 General

.1 Refer to requirements for services to be painted in the relevant sections of Division 20 to 25 and as specified herein, including but not limited to:

.1 general requirements for painting in accordance with Specification section 20 01 01,

.2 painting of pipe sleeves in accordance with Specification section 20 05 01,

.3 painting of fuel oil piping in accordance with Specification section 23 11 13,

.4 painting of natural gas piping in accordance with Specification section 23 11 23.

3.2 Repair of Factory Coatings

.1 Touch up any damage to factory prime coat finishes resulting from shipping or installation with appropriate primer for indoor/outdoor installation followed by an appropriate top-coat colour to match existing. Materials to be compatible with the original factory finish.

.2 Touch up any damage to factory galvanized finish resulting from site welding, shipping or installation with zinc rich primer.

3.3 Paint Installation

.1 Surface preparation and protection:

.1 Clean surfaces to be painted in accordance with paint manufacturer recommendations and as follows.

.2 Surfaces to be clean, dry and free from dust, oil, grease, loose or flaking paint and foreign materials at time of application of paint materials.

.3 For carbon steel materials, remove all loose mill scale, loose rust, loose paint, and other loose detrimental foreign matter by hand chipping, scraping, sanding, and wire brushing in accordance with SSPC-SP2 or use power tool cleaning in accordance with SSPC-SP11

.4 For galvanized steel material, solvent clean to SSPC-SP1. If galvanized surface is already rusty, remove loose rust and dirt in accordance with SSPC-SP2 or SSPC-SP11 and prime the exposed metal the same day as being cleaned.

.5 For concrete materials, clean surfaces to SSPC-SP13 / NACE 13 by mechanical, chemical or thermal methods.

.6 Tape-off adjacent materials which are not to be painted.

.7 Provide drop sheets to protect other material from falling paint or over-spray.

.2 Application - General:

.1 Apply one coat of primer to carbon steel items.

.2 Use primer unadulterated, as prepared by manufacturer.

.3 Apply top coat in the number of coats recommended by the manufacturer, to obtain 100% coverage to the minimum recommended thickness, free of streaks, drips and sags.

.4 Do not paint when temperature is lower than 7°C.

.3 Application – Galvanized base metal finish:

.1 Where material is galvanized, touch up welded sections or other locations where protective galvanized surface has been damaged, with zinc rich primer.

.2 Apply a top coat to match base material colour.

End of Section

Master revised: 13 November 2021

COMMON ELECTRICAL REQUIREMENTS FOR MECHANICAL SERVICES
20 05 12

1 GENERAL

1.1 Scope

.1 Provide wiring, conduit, fittings, supports, disconnect switches, service lights, and related devices and equipment for mechanical trades work, at voltages of 600V and less and to the extent specified herein.

.2 Pre-installation survey of SCCR values for equipment supplied under Divisions 20 to 25 which requires power wiring supply, to verify nameplate SCCR is equal to or greater than the minimum specified SCCR values.

1.2 Related Sections

.1 Without limiting the scope of work or applicability of other specification sections, the work under this section directly integrates with or refers to the following specification sections:

.1	20 05 29	Hangers and Supports
.2	20 05 49	Seismic Restraint.
.3	20 05 14.13	Motor Controllers
.4	20 05 14.16	Variable- Frequency Drives
.5	25 55 13	Building Automation Smoke Damper Control Panels

1.3 Definitions and Abbreviations

.1 The following definitions apply to this section and referenced sections:

.1 ***Control panels –*** an electrical device that controls or monitors mechanical equipment, or that interfaces with instrumentation devices.

.2 ***Control wiring*** - wiring for the purpose of communication or control of equipment and instrumentation.

.3 ***Electrical safety code -*** the edition with amendments of CSA C22.1 as adopted by applicable legislation at the location of the Work.

.4 ***Mechanical breaker panel (MBP)*** means a 120/208 V mechanical power panel with overcurrent protection circuit breakers provided as part of an MCC.

.5 ***Mechanical service panel (MSP) -*** panelboard with branch circuit overcurrent protection devices provided by Division 26, and dedicated to supply power for equipment provided by mechanical trades work.

.6 ***Mechanical trades work -*** equipment and systems provided under Divisions 20 to 25.

.7 ***Motor controllers -*** constant speed motor controllers of the manual, magnetic or solid-state type in accordance with specification section 20 05 14.13.

.8 ***Motor Control Center –*** has the meaning as specified in section 20 05 14.13.

.9 ***Packaged equipment -*** equipment containing some or all of: motor(s), controls and/or other electrically powered equipment, such as but not limited to: electric heating equipment, water treatment equipment, packaged HVAC equipment, electric boiler, electric domestic water heaters, etc.)

.10 ***Power Panel (PP)***: 208 up to 600 V, 3 phase, panelboard with branch circuit overcurrent protection devices provided by Division 26, which serves general building loads and may also serve equipment provided by mechanical trades work.

.11 ***Power wiring*** means wiring that provides electrical power to equipment including to control panels, including BAS panels, that are not integral to the controlled equipment.

.12 ***Receptacle panel (RP)*** - a 120/208 V panelboard with branch circuit breakers, provided by Division 26.

.13 ***SCCR***: the RMS symmetrical short-circuit current rating of the equipment or motor controller, measured at the input to the motor or controlled equipment (short-circuit withstand rating has the same meaning).

.14 ***VFD***: variable frequency drives in accordance with specification section 20 05 14.16.

.15 ***Wiring*** means conductors, cable, conduit, fittings, supports and accessories.

.2 With respect to these definitions, for equipment provided by Division 26 the actual terminology used in the Division 26 drawings and specification may differ but the intent remains the same.

.3 For clarity, any reference herein to Division 20 means Divisions 20 to 25 inclusive.

1.4 Applicable Codes and Standards

.1 Legislation:

.1 Electrical safety legislation in the jurisdiction of the Work.

.2 For clarity, on Federal Government projects, comply with the provincial or territorial legislation at the place of the Work which adopts the applicable edition of CSA 22.1 with any amendments

.2 Installation standards and codes:

.1	CSA C22.1	Canadian Electrical Code Part 1, as amended and adopted by the AHJ for electrical safety in the province or territory at the place of the Work.

.3 Product standards:

.1	CSA C22.2 No. 4	Enclosed and Dead-Front Switches
.2	CSA C22.2 No. 38	Thermoset-Insulated Wires and Cables
.3	CSA C22.2 No. 39	Fuseholder Assemblies
.4	CSA C22.2 No.94.1	Enclosures for Electrical Equipment, Non-Environmental Considerations
.5	CSA C22.2 No.94.2	Enclosures for Electrical Equipment, Environmental Considerations
.6	CSA C22.2 No. 106	HRC – Miscellaneous Fuses
.7	CSA C22.2 No. 124	Mineral Insulated Cable
.8	CSA C22.2 No. 131	Type TECK 90 Cable
.9	CSA C22.2 No. 208	Fire Alarm and Signal Cable
.10	CSA C22.2 No. 230	Tray Cable
.11	CSA C22.2 No. 239	Control and Instrumentation Cables

1.5 Quality Control

.1 Electrical wiring for mechanical trades work to be performed by a specialist electrical contractor firm with an established reputation in the field of wiring of mechanical equipment and controls.

1.6 Short Circuit Current Ratings (SCCR) and Markings

.1 Except where another Specification section requires a SCCR of a different value, equipment provided under Division 20 to 25 which is supplied electrical power in accordance with CSA C22.1 shall have a short circuit capacity rating (SCCR) of not less than [10][25][65][100] kAIC RMS symmetrical.

.2 The SCCR value is to be marked on all equipment provide with power wiring in accordance with CSA C22.1. Where the SCCR nameplate rating references an instruction manual, provide a separate label that states the SCCR value.

1.7 Permits, Fees and Inspections

.1 Arrange and pay for electrical permits and any required inspections for electrical work for mechanical equipment and systems.

.2 Submit to the electrical safety authority the required number of drawings and specifications for examination and approval prior to commencement of work.

.3 Notify Consultant of changes required by the electrical safety authority prior to making changes.

.4 On completion of the Work, furnish certificates of acceptance (or similar report) from the electrical safety authority to the Consultant.

1.8 Standard Details

.1 Device legend with list of abbreviations and schematic wiring diagrams are included at the end of this section that delineate the scope of work between Division 20 and Division 26 and as further specified herein.

.2 This material is to be used in the interpretation of specification requirements for power wiring and control wiring of Division 20 to 25 equipment.

1.9 Submittals

.1 Submit manufacturer catalogue cut-sheets for the following materials;

.1 VFD Inverter Duty cable,

.2 service lights.

1.10 Storage of Materials

.1 Store wire and cable in a clean, dry, well-ventilated area.

.2 Protect white insulated wire from exposure to NOx gas (e.g.: exhaust from propane fueled equipment) by wrapping with shrink wrap, by locating away from sources of NOx and by maintaining adequate ventilation to minimize NOx levels.

.3 Where white insulated wire has discoloured:

.1 do not install,

.2 dispose of the wire,

.3 remove and replace wire that has been installed.

2 PRODUCTS

2.1 Motor Feeder and Control Wiring (“Building Wires”)

.1 Application:

.1 motor and equipment power feeders controlled by constant speed motor controllers;

(a) do not use for motors controlled by variable frequency drives,

.2 control wiring including control valves and damper actuators, panel control wiring, motor controller interlock wiring, BAS control wiring, and switch-type instrumentation,

.3 convenience power outlets and service lights.

.2 Conductors:

.1 solid copper for No. 12 and 14 AWG,

.2 stranded conductors for 10 AWG and larger.

.3 Minimum wire size:

.1 No. 12 AWG for equipment power,

.2 No. 14 AWG, for control wiring at 120 VAC or lower.

.4 Insulation:

.1 chemically cross-linked thermosetting polyethylene (XLPE) material, RW90 or RWU90,

.2 1000 V insulation for 600 V systems,

.3 600 V insulation for 100 VAC to 480 VAC systems.

.4 300 V insulation for systems less than 100 VAC, and for systems 24 VDC and less.

.5 Colour coded conductors:

.1 colour impregnated into insulation at time of manufacture,

.2 phase conductors No. 8 AWG and larger with black insulation, may be colour coded with adhesive colour coding tape.

.6 Listed to CSA C22.2 No. 38.

Standard of Acceptance
- Aetna Insulated Wire
- General Cable
- Nexans Canada Inc.
- Prysmian Cables & Systems Ltd.
- Southwire

2.2 VFD Inverter Duty Cable

.1 Application:

.1 for motor power feeders between a VFD and its driven motor,

.2 specifically manufactured to reduce high frequency noise and grounding of common mode currents.

.2 Cable:

.1 symmetrical conductor, low-capacitance design with three ground wires and shield,

.2 conductors: braided copper wire with RW90 XLPE insulation.

.3 voltage rating: 1000 VAC, with resistance to voltage spikes of not less than 2 kV.

.4 bonding conductors: three (3) bare copper conductors,

.5 shielding:

(a) designed for EMC/RFI reduction and as a low-impedance path for high-frequency common mode currents,

(b) 100% coverage by two-layers of copper-wrap tape shield, or

(c) shielding provided by continuous corrugated and welded aluminium armoured sheath.

.6 sheath:

(a) method 1: continuous corrugated and welded aluminum armour sheath (amour and shield),

(b) method 2: interlocked aluminium sheath for armour, separate copper wrap shields as specified above,

(c) method 3: no armour sheath required when cable has the specified copper tape shielding and is installed in conduit,

.7 outer jacket: TPE or PVC liquid-tight with FT4 and AG14 rating, and UV resistant.

.8 listed to CSA C22.2 No. 38, and CSA C22.2 No. 230.

Standard of Acceptance

- NEXANS - fig. DriveRx (armoured)
- ShawCor - fig. CSA Armoured AIA VFD (armoured)
- ShawCor - fig. CSA Unarmored Tray VFD (unarmoured
- Belden - fig. Symmetrical 2kV (unarmoured)
- Belden - fig. Symmetrical 2kV (armoured)

.3 Cable shield termination fittings:

.1 High-frequency/low impedance shield termination kit to provide 360° connection to the cable shield, with flexible tinned copper braid bonding strap with attached lug, and constant force spring collar.

Standard of Acceptance

- Southwire – fig. 85451

.2 High-frequency/low impedance cable gland, with integral 360° copper alloy shield contact spring.

Standard of Acceptance

- Southwire - fig. 85452

2.3 Extra-Low Voltage Power Wiring – 24 VAC, 24 VDC

.1 Application: power wiring to 24 VAC or 24 VDC electrically commutated motors.

.2 Type: ACIC,

.3 Cable:

.1 insulated solid or stranded copper conductors,

.2 insulation: XLPE, colour coded or numbered wires,

.3 minimum wire size: 16 AWG,

.4 voltage rating: 600 V.

.4 Armour:

.1 aluminium interlocked armour.

.5 Jacket:

.1 FT4 flame retardant,

.2 FT6 when installed in raised floors, or in ceiling spaces that are used as return air plenums.

.6 Listed to CSA C22.2 N0. 239,

Standard of Acceptance

- General Cable (Carol)
- Belden
- Nexans Canada Inc.

2.4 Instrumentation Cabling

.1 Application: instrumentation and control wire suitable for analogue 4-20 mA and 0-10 VDC signaling.

.2 Cable:

.1 insulated solid-copper twisted-multipair conductors, shielded cables with individually shielded pairs, 100% coverage overall shield, drain wires and overall rated jacket,

.2 insulation: XLPE, colour coded or numbered wires,

.3 minimum wire size: as specified by equipment manufacturer or controls vendor, but not less than 18 AWG,

.3 Armour:

.1 corrugated steel, or

.2 none required if installed in conduit or approved wireway.

.4 Jacket:

.1 FT4 flame retardant,

.2 FT6 when installed in open style cable trays in ceiling spaces that are used as return air plenums.

.5 Listed to CSA C22.2 No. 239,

Standard of Acceptance
- General Cable (Carol)
- Belden
- Nexans Canada Inc.

2.5 Fire Rated Mineral Insulated Cable

.1 Application – power feeders:

.1 conductors: solid annealed copper,

(a) 2 conductors, minimum 14 AWG for power wiring for Division 20 to 25 control equipment including dampers and terminal units,

(b) 2 or 3 conductor as applicable, size as shown but not less than 12 AWG for power wiring to Division 20 to 25 mechanical equipment (other than control equipment)

.2 insulation: compacted magnesium oxide (“MI”)

.3 sheath: seamless annealed copper.

.4 voltage rating: 600 V

.5 terminations: as supplied by the cable manufacturer.

.6 fire rating: listed for 2 hour fire-resistance rating with hose stream test to ULC-S139 cables labelled accordingly.

.7 ship cables with ends sealed.

.8 listed to CSA C22.2 No. 124 and ULC-S139.

Standard of Acceptance
- Pentair/Pyrotenax System 1850

.2 Application - communication wiring:

.1 conductors: solid annealed copper, single twisted pair 18 AWG.

.2 insulation: compacted magnesium oxide (“MI”)

.3 shield: seamless annealed copper.

.4 secondary insulation: compacted magnesium oxide (“MI”).

.5 sheath: seamless annealed copper.

.6 voltage rating: 300 V.

.7 terminations: as supplied by the cable manufacturer.

.8 listed for fire alarm cabling CSA FAS 105.

.9 fire rating: 2 hour fire-resistance rating with hose stream test to ULC-S139.

.10 ship cables with ends sealed.

.11 listed to CSA C22.2 No. 208 and ULC-S139.

.12

- Pentair/Pyrotenax System 1850 Twisted Pair

2.6 Fire Rated Ceramifriable Silicone Rubber Insulated Cable

.1 Application: controls and communications wiring.

.1 No of conductors:

(a) single twisted pair for control and BAS MSTP communication,

(b) 4x shielded twisted-pair for Ethernet communications.

.2 conductors: annealed copper, 18 AWG, with flame retardant tape cover,

.3 insulation: thermoset ceramifriable silicon rubber, colour coded red/black,

.4 drain wire: 20 AWG copper,

.5 shield: copper/polyester tape,

.6 jacket: low smoke, zero halogen polyolefin, red colour,

.7 voltage rating: 72 V maximum,

.8 fire rating: 2 hour fire-resistance rating with hose stream test to ULC-S139,

.9 listed to CSA C22.2 No. 208 and ULC-S139.

Standard of Acceptance

- Vitalink (Marmon, Comtran) FAS 105

2.7 Conduits and Fittings

.1 Conduits:

.1 rigid hot dipped galvanized steel threaded conduit,

.2 electrical metallic tubing (EMT), hot dipped galvanized with couplings,

.3 PVC coated hot dipped galvanized rigid steel conduit: with 40 mil PVC exterior coating, 2 mil urethane interior and thread coating,

.4 flexible metal conduit and liquid-tight flexible metal conduit.

.2 Conduit fastenings:

.1 single hole steel straps to secure surface conduits 50 mm (2") and smaller,

.2 two hole steel straps for conduits larger than 50 mm (2"),

.3 beam clamps to secure conduits to exposed steel work,

.4 channel type supports for two or more conduits,

.5 Ø6 mm threaded rods to support suspended channels.

.3 Conduit fittings:

.1 manufactured for use with conduit specified including coatings,

.2 factory "ells" where 90° bends are required for 25 mm (1in.) and larger conduits,

.3 insulated throat steel set screw or raintight insulated throat steel compression connectors and couplings for EMT,

.4 threaded or compression type raintight/concrete tight insulated throat zinc plated steel connectors and couplings for rigid steel conduit,

.5 raintight insulated throat steel connectors at all surface equipment enclosures and other electrical equipment in sprinklered areas for all conduit terminations.

2.8 Outlet Boxes

.1 Construction:

.1 hot dipped galvanized steel single and multi-gang flush device boxes for flush installation,

.2 Size:

.1 76 mm x 50 mm x 38 mm (3" x 2" x 1½") or as indicated,

.2 102 mm (4") square outlet boxes when more than one conduit enters one side with extension and plaster rings as required.

2.9 Disconnect Switches

.1 Construction:

.1 listed to CSA C22.2 No. 4,

.2 enclosure type:

(a) painted metal with hinged door,

(b) indoors: type 1, 3R, 4 or 12, unless otherwise specifically shown,

(c) outdoors: type 3R.

.3 fuseholder assemblies listed to CSA C22.2 No. 39,

.4 include fuses unless shown as unfused,

.5 fuseholders suitable for Class J fuses, sized to suit the fuse sizes without the use of adaptors,

.6 horsepower rated,

.7 one, two or three pole as required for single phase or polyphase circuits,

.8 two pole with solid neutral or three pole with solid neutral for three wire and four wire circuits with neutral,

.9 six pole for two speed motor applications,

.10 provision for padlocking in the Off switch position,

.11 mechanically interlocked door to prevent opening when handle is in the ON position,

.12 heavy duty, quick-make, quick-break action,

.13 ON-OFF switch position indication on switch enclosure cover.

.2 Fuses:

.1 HRCI-J time delay up to 600A,

.2 HRCI-L for ratings above 600A,

.3 minimum interrupting capacity: 200 kAIC

.4 product of one manufacturer,

.5 ampere rating as indicated, where not indicated, the maximum rating permitted by the electrical code.

.3 Special requirements for disconnect switch located upstream of harmonic filters:

.1 double break contacts per pole, to isolate fuses on both the line and load side,

.2 14 AWG power taps on both line and load sides for control power transformers.

.4 Special requirements for disconnect switch located between a VFD and the controlled equipment:

.1 auxiliary switch position status switch;

(a) rating: 10 A at 120 VAC,

(b) switch contacts open when disconnect switch is Not-Closed.

.5 Ratings:

.1 IEC 90 rotary switch for motors up to 18.6 kW (25 HP),

.2 NEMA flange mount switch-handle for all ratings.

Standard of Acceptance

- Square "D"/Schneider Electric Company (Canada) Ltd.
- Eaton
- Siemens Canada Ltd.
- Klockner Moeller/Eaton

2.10 Equipment Service Lights

.1 Protected globe light fixture (“Marine light”):

.1 die-cast aluminium housing and cage, frosted glass lens, stainless steel hardware, suitable for wall and ceiling mounting,

.2 enclosure rating: NEMA 4X or IP 65, vapourtight,

.3 listed and fixture marked for use in wet locations,

.4 bulb: LED with electronic driver, minimum life of 50,000 hours at L70 lumen level,

.5 optics: 3500 to 4000 K light, nominally 1400 lumens,

.6 operating temperature: -20 to +40°C (-4 t0 +104°F),

.7 operating humidity: up to 100% relative humidity at operating temperatures between 0 and +40°C (32 to 104°F),

.8 power: 120 VAC.

Standard of Acceptance

- Cooper - fig. LVL20UG

.2 Area light fixture (“Area light”):

.1 reinforced-polyester fiberglass housing, stainless steel hardware, with lens gasket, suitable for wall and ceiling surface-mounting,

.2 fixture length: 600 mm (24 in),

.3 lens: low profile, high impact 50% DR acrylic lens, for wide distribution,

.4 enclosure rating: NEMA 4X or IP 65, vapourtight,

.5 listed and fixture marked for use in wet locations,

.6 bulb: LED with electronic driver, minimum life of 60,000 hours at L80 lumen level,

.7 optics: 3500 to 4000 K light, nominally 3000 lumens,

.8 operating temperature: -20 to +40°C (-4 t0 +104°F),

.9 operating humidity: up to 100% relative humidity at operating temperatures between 0 and +40°C (32 to 104°F),

.10 power: 120 VAC.

Standard of Acceptance

- Cooper - fig. 2VT3
- Lithonia - fig. FEM LED

2.11 Switches

.1 Toggle switch, with neon pilot light – light is On when switch is Off.

.2 Rating: 20 A at 120 Vac.

.3 Switch cover: weatherproof with silicone rubber gasket, and clear bubble over toggle.

Standard of Acceptance

- Hubbell - HBL1795

2.12 Receptacles

.1 Class A GFCI type, 15 A at 120 VAC indoors, and 20 A T-slot for outdoors.

.2 Receptacle outlet hood:

.1 in-use weatherproof, for both indoor and outdoor locations,

.2 die cast aluminum base and cover with gasket,

.3 vertical mount.

.4 self-closing lift cover.

.5 CSA 3R rated.

Standard of Acceptance

- Bryant Electric – WPB26EH

2.13 Conduit and Equipment Supports

.1 General:

.1 supports for conduit may conform to Specification section 20 05 29 except/and as specified herein.

.2 Materials: carbon steel supports, hot dipped galvanized after fabrication.

.3 manufacturer standard products suitable for support load rating of conduit and conductors:

Standard of Acceptance

- Burndy Canada Ltd.

- Canstrut
- Electrovert Ltd.
- E. Myatt & Co. Ltd
- Steel City Electric Ltd.
- Pilgrim Technical Products Ltd.

.2 Upper attachment – concrete inserts

.1 galvanized wedge inserts to MSS SP-58 type 18.

.2 maximum tension load rating: 4.4 kN (1000 lbs),

Standard of Acceptance

- Anvil - fig. 281
- Unistrut - fig. P-3245

.3 Upper attachment – existing concrete:

.1 conform to Specification section 20 05 29.

.4 Upper attachment – steel beams:

.1 carbon steel beam clamp (top flange), hook rod with locking jaw, fasteners and lockwashers, to MSS SP-58, type 25,

Standard of Acceptance

- Anvil - fig. 227
- Myatt - fig. 504, 505

.5 Upper attachment - steel joists:

.1 for installation of support rod in the interstice space of double-ell steel joists and open-web steel joints for support on the lower chord,

.2 carbon steel washer plate with double locking nuts on top-side of washer,

.3 second steel washer plate on underside of joist with nut where supported equipment is subject to vibration.

Standard of Acceptance

- Anvil - fig. 60
- Myatt - fig. 545

.6 Hanger rods:

.1 continuous threaded rod, carbon steel, USS national course thread,

.2 minimum rod size: Ø6 mm (1/4 in. dia.),

.3 tension load ratings to MSS SP-58,

Standard of Acceptance

- Anvil - fig. 146
- Myatt - fig. 434

.7 Horizontal Pipe Support – Swivel Ring Hanger

.1 swivel ring hangers, carbon steel ring strap, zinc plated, adjustable knurled swivel nut, to MSS SP-58 Type 10,

.2 nominal conduit size: 12mmC to 100 mmC.

Standard of Acceptance

- Anvil - fig. 69, CT-69
- Myatt - fig. 41, 42, 43
- Unistrut

.8 Support channels:

.1 U shape, minimum size 41 mm x 41 mm x 2.5 mm (1-1/2" x 1-1.2" x 1/10") thick, surface mounted, suspended or set in poured concrete walls and ceilings.

.2 channel size selected for total supported loads,

.3 conduit attachments: one-piece or two piece conduit clamps suitable for suspended loads and bottom supported conduit loads.

.9 J Hooks:

.1 galvanized steel open-style J hooks with rolled edges for fastening direct to building structure or hanger rods.

.10 Rooftop conduit supports:

.1 conform to specification section 20 05 29.

2.14 Wire Markers

.1 Printed, self-laminating vinyl wire and cable labels and sleeve-labels.

Standard of Acceptance

- Brady BMP21 Plus series

3 EXECUTION

3.1 Pre-Installation Survey for Short Circuit Current Ratings

.1 Prior to installation of power wiring to mechanical equipment provided under Division 20 to 25, conduct a survey of such mechanical equipment's' SCCR values. Verify that the equipment nameplate SCCR rating is equal to or greater than:

.1 the general value specified in this section, or

.2 the specific value specified in the relevant Specification section for the equipment.

.2 Where the nameplate SCCR is less than the specified minimum SCCR required value, provide a fused disconnect switch as specified herein ahead of the equipment, even if the equipment already has an integral disconnect switch. The cost for the provision of such disconnect switches shall be borne by the trade contractor supplying the mechanical equipment, at no cost to the Owner.

.3 For clarity, this survey also applies to existing mechanical equipment where the Work includes replacement of the power wiring supplying the equipment.

3.2 General Installation Requirements

.1 Install electrical wiring work under this specification section in accordance with the applicable electrical safety code and regulations applicable at the location of the Work.

.2 In other than service rooms, run conduit and cable concealed within walls or above ceilings.

.1 for open-cell concrete block walls, install conduit during wall construction with openings for outlet boxes,

.2 for solid concrete walls, rough-in conduit and outlet boxes supported from structural reinforcing bars prior to pouring of concrete,

.3 where walls or ceiling structures are exposed, such as steel or finished concrete, arrange conduit neatly on the supporting surface, avoid the use of elbows to the greatest extent possible, and locate conduit as close as possible to the building structure.

.3 In service rooms, run conduit and cables exposed.

3.3 Conduit Support and Hanger Installation

.1 As an alternative to the materials specified herein, specification section 20 05 29 may also be used for support of conduits.

.2 Support conduit from building structure in accordance with specification section 20 05 29.

.3 Support conduit directly from or on structural building elements. Do not support conduit directly from other services.

.4 Provide all miscellaneous materials including nuts, washers, and backing plates to make a complete support installation.

.5 Where wall brackets are used, select brackets and size mounting bolts and backing plates to suit the supported load, allowing for a safety factor by not loading the bracket more than 80% of its published load rating.

.6 In steel framed construction, support conduit from structural members. Where structural members are not suitably located for upper hanger attachment locations, and where inserts of adequate capacity cannot be installed in concrete slabs, provide supplementary steel framing members;

.1 fabricate supplementary steel from standard HSS sections, single EL section, double C “strongback” sections, or pipe rolls,

.2 size supporting steel to limit span deflection to 1/250 (0.4%) between support points,

.7 Support horizontal conduit at intervals not exceeding 3 m (6 ft).

.8 Support vertical conduit at intervals not exceeding 3 m (6 ft).

.9 Where trapeze hangers are used, secure conduit to trapeze with U-bolts or conduit clamps.

.10 Mechanically fasten supplementary steel to structural steel.

3.4 Armoured Cable Support

.1 Support armoured cable VFD cables on 300 mm (12 in.) centres on channel supports and secured with conduit clamps. Do not use nylon or wire lashing or perforated strap to support or secure cables.

.2 Support instrumentation armoured cables horizontally in cable trays or with J-hooks on 300 mm (12 in.) centres.

.3 Support instrumentation armoured cables vertically by securing to building structure or secondary framing with perforated straps with 3 mm (1/8 in.) thick EPDM protective strip between the strap and cable.

3.5 Plenum-Rated Control and Instrumentation Cables Support

.1 Support plenum-rated instrumentation and control cables in cable trays or with J-hooks on 300 mm (12 in.) centres. Support vertical cable drops to controls instrumentation, controlled devices or related equipment by use of vinyl tie-wraps fastened to building structure, supplementary steel, or equipment hanger rods. Do not support cables on piping or ductwork.

3.6 Installation of Power and Control Wiring – General Requirements

.1 [Wiring methods and standards to conform with those specified in Electrical Division 26 for the area of building in which installation is to be made, except as otherwise specified in this section.][]

.2 Except where fire rated cables or VFD Inverter duty cables are required, use building wire for:

.1 power wiring for motors and packaged equipment,

.2 power wiring to control panels, heat tracing and other non-motorized packaged equipment, and

.3 non-analog control wiring at 120 VAC or less, and 24 VDC or less.

.3 Provided polyphase motor and equipment power conductors with the following colour coding:

.1 Phase A – Red,

.2 Phase B – Black,

.3 Phase C – Blue ,

.4 Neutral - White,

.5 Ground - Green,

.6 Control - Orange.

.7 Where colour coded tape is utilized, apply at least 50 mm (2") at terminations, junction boxes and pull boxes. Do not paint conductors.

.4 Provide single-phase motor and control wiring conductors with the following colour coding:

.1 Line – Red,

.2 Neutral – White,

.3 Ground – Green.

.5 Install all wiring in conduit or approved raceway.

.6 Use conduit type as follows:

.1 EMT: use thin wall conduit up to and including 32 mm (1 ¼ in) size for wiring in ceilings, furred spaces, in hollow walls and partitions and where not exposed to mechanical injury, and as otherwise shown.

.2 Rigid : use rigid galvanized steel conduit for wiring in poured concrete, where exposed, and for conduit 40 mm (1½ in) size and larger.

.3 Liquid-tight flexible: use only for the last 1000 mm (3 ft) of motor feeder at connection to motor, and for instrumentation wiring to equipment subject to vibration.

.4 select conduit size to be of sufficient size to allow easy removal of conductors at any time. Conduit sizes, where shown, are minimum and shall not be reduced.

.7 Provide separate conduit for power wiring for each motor or starter. Except for motor temperature transducer wiring, do not install control wiring in the same conduit as power wiring.

.1 exception: motor temperature transducer wiring between motor and associated motor controller may be run in the same conduit as the associated motor feeder provided the conduit is sized for the additional wire pair.

3.7 Installation of Power Wiring for VFDs and Associated Motors

.1 Use VFD inverter duty cables for motor feeders between VFDs and associated motor.

.2 Run VFD inverter duty cables in rigid conduit or EMT between the VFD and the motor, with liquid-tight flexible conduit used at the motor connection;

.1 use only site-formed bent elbows for changes of direction; do not use ells,

.2 make an elbow radius so that the bend radius of the cable is not less than the minimum bending radius specified by the cable manufacturer,

.3 do not combine wiring from any other source or purpose within VFD feeder conduit.

.3 VFD inverter duty cables may be run in free- air (without conduit) where all the following conditions are met;

.1 the VFD cable is of the armoured type,

.2 the armoured cable is located in the same room as the VFD and the motor,

.3 the armoured cable length does not exceed a total length of 10 m (33 ft);

(a) for longer cables, the 10 m (33 ft) free-air length is to be located at the motor end,

.4 where the cable passes through the wall of air handling units,

(a) provide a 100 mm (4 in) long section of rigid conduit (sleeve) through the wall,

(b) the sleeve is provided with escutcheons to seal the wall opening,

(c) the ends of the conduit are reamed and cleaned of burrs and sharp edges, and

(d) the cable/sleeve is sealed with a non-hardening mastic (i.e. firestop compound) at one end.

.4 Terminate the shield on VFD inverter duty cables as follows:

.1 terminate at both ends of the cable at the motor enclosure box ground screw and at the VFD cabinet entrance potential bond screw,

.2 connect the shield to the ground screw of any intervening devices between the VFD and the motor where the cable is interrupted, including disconnect switches, output load-filters,

.3 connect the ends of the shield with a low-impedance 360° contact termination kit, either by use of a special-purpose gland or by a special-purpose bonding strap.

.5 Terminate the three ground conductors at each end. A pigtail may be used for final termination to the motor ground lug or the VFD ground lug provided the pig-tail size is not less than the size of the individual cable ground wire.

.6 Where the VFD cable must be interrupted at an equipment disconnect switch or otherwise spliced, terminate the ends of the shield using low-impendence termination kits at the common ground lug in the disconnect switch or junction box. Bond the six (6) ground conductors with a common pigtail to a ground lug.

3.8 Harmonic Filter Control Power

.1 Provide 120 VAC control power supply to operate contactors in the passive harmonic filters from a 24 VDC control signal from the VFD.

.2 Power and control system to include:

.1 120 VAC power supply (one branch circuit may serve multiple harmonic filters),

.2 double voltage relay, 24 VDC coil voltage, 120 VAC output contacts,

.3 Type 1 metal enclosure to CSA C22.2 No. 94.1.

.3 Where the VFD output relay contacts are rated to power the harmonic filter contactor directly, 120 VAC power supply and double-voltage relay is not required.

.4 Provide control wiring between the VFD and the passive harmonic filter.

.5 Program the VFD to open the harmonic filter contactor (to disconnect the filter capacitors) when the VFD output is below 70% of motor rated speed.

3.9 Installation of Instrumentation, Communications and Control Cabling

.1 Install wiring in conduit.

.2 Neatly train circuit wiring in cabinets, panels, pullboxes and junction boxes and hold with nylon cable ties.

.3 Run instrumentation, communication and control cabling point to point and terminate on terminal strips. Do not splice communication or control cabling. Where long runs make a continuous point to point installation impractical, make splices on labelled terminal blocks in an accessible labelled terminal cabinet, installed at 1200 mm (48") above floor, and indicate cabinet location, terminal and wire numbers on the As-built drawings.

.4 Terminate control cables in equipment with suitable connectors.

.5 Clearly identify cables/conductors at both ends, with permanent wire markers, indicating device/panel identification and terminal numbers on the device/panel (refer to standard detail 20 15 12-021 at the end of this specification section):

.1 Use applicable reference name or ID tag for the device or control panel.

.2 Print the labels such that the applicable panel/device identification is closest to the end of the cable.

.3 Where individual wires are run in conduit, collect wires associated to the same control panel/device and apply a label to the group of wires inside each control panel/device. Where there is insufficient space inside a device (such as a transmitter), the label may be applied to the conduit at the point of connection to the device.

.4 Where there are multiple conductors, individually identify each wire by its termination reference on the panel or device to which it connects.

.5 Where there are only two wires and it is readily understood where each wire is to be terminated (i.e. white neutral, green ground), individually marking of the wires is not required.

3.10 Grounding

.1 Ground electrical equipment and wiring in accordance with the applicable electrical safety code and regulations applicable at the location of the Work except where greater requirements are specified herein.

.2 Provide insulated green bonding conductor in each power and control conduit sized per Table 16 of the Electrical Safety Code. Minimum bonding conductor size #12AWG copper.

.3 Install grounding conductors, outside electrical rooms and electrical closets, in conduit.

.4 Make connections to neutral and equipment with brass, copper or bronze bolts, star-washers, and connectors.

.5 Except for VFD Inverter Duty cables, ground all motors with separate green insulated copper ground conductor installed in power feeder conduit, wired from ground terminal in the motor controller to a ground lug bolted directly to the motor frame, located inside the motor terminal box. Size the ground conductor per Table 16 of the electrical safety code except that the smallest conductor size to be #12 AWG.

.6 Ground VFD inverter duty cables using all three integral ground conductors, from the ground terminal in the VFD enclosure to the ground lug bolted directly to motor frame inside the motor terminal box.

.7 For VFDs, bond both ends of the VFD inverter duty cable as previously specified herein.

3.11 Disconnect Switches

.1 Provide a disconnect switch for each piece of mechanical equipment provided under Division 20 to 25 which requires a power supply. This requirement is to be met by the following methods as applicable to each piece of equipment:

.1 as an integral factory-installed component of the equipment, or

.2 as a field-installed switch where;

(a) the equipment does not have an integral disconnect switch, or

(b) the equipment includes a factory installed disconnect switch but the equipment as a whole does not have a SCCR rating which meets or exceeds the required minimum SCCR rating specified herein or as specified in the applicable equipment Specification section.

.2 For clarity, provide a disconnect switch upstream of harmonic filters provided for VFDs.

.3 Locate the disconnect switches as follows;

.1 within 9 m (29 ft) and in the line-of-site of motors serving non-refrigeration motorized equipment, and within 9 m (29 ft) of the motor controller or VFD controlling the equipment,

.2 within 3 m (9.5 ft) and in the line-of-site of equipment containing refrigeration compressors and related motorized equipment that forms part of a refrigerant circuit,

.3 at cooling towers and other outdoor equipment where the motor controller is located indoors, and

.4 within 1 m (3 ft) of non-motorized equipment,

.5 within 1 m (3 ft) of harmonic filters for VFDs.

.4 Disconnect switch types for motorized equipment:

.1 fused type for motor controllers and VFD's, including harmonic filters.

.2 fused type for motorized packaged equipment,

.3 unfused for non-motorized equipment,

.4 unfused type at the controlled equipment for:

(a) cooling towers and other outdoor equipment where the motor controller is located indoors, or

(b) where the motor controller is in excess of the distance specified above or is not in line of site of the controlled equipment.

.5 Disconnect switches on load side of VFD:

.1 where a disconnect switch is required between a VFD and the driven motor due to excess distance or lack of line-of-site requirements, provide an unfused disconnect switch with integral disconnect status position switch, as close as possible to the motor,

.2 wire the status switch back to the VFD input for drive output protection.

.6 Disconnect switches for non-motorized equipment:

.1 provide unfused disconnect switch for non-motorized mechanical equipment.

.7 Where the nameplate SCCR value of a mechanical equipment is less than the specified minimum SCCR value required, provide a fused disconnect switch to isolate the mechanical equipment, even if the equipment has an integral disconnect switch.

.8 Where fuse protection is specified, install fuses of the correct overcurrent rating as specified by the mechanical equipment installation instructions.

.9 Where fuse protection is specified, provide a set of six spare fuses of each size used in the disconnect switches. Turn spare fuses over to the Owner and submit a copy of the receipt signed by the Owner.

.10 Provide power wiring between the field-installed disconnect switch and the associated equipment, with the conductors of the same wire gauge as the branch circuit conductors.

3.12 Outlet Boxes

.1 Size boxes in accordance with CSA C22.1. Use 102 mm (4") square or larger outlet boxes as required for special devices.

.2 Gang boxes where wiring devices are grouped. Use combination boxes with barriers where outlets for more than one system are grouped.

.3 Provide blank cover plates for boxes without wiring devices.

3.13 Service Lights, Switches and Receptacle

.1 Provide service light in the following locations, with the type and spacing as indicated.

Location	Condition	Fixture Type	Fixture Spacing
Inside air handling units with walk-in access	Unit height ≤ 2.0 m (6.5 ft)	Marine	Each accessible section of the unit
	Unit height > 2.0 m (6.5 ft)	Area	
Inside air plenums	Plenum height Between 1.2 m and ≤ 2.0 m (6.5 ft)	Marine	Each 3.0 m (10 ft) in length or width
	Plenum height > 2.0 m (6.5 ft)	Area	
Outside of cooling towers (if shown on drawings).	All	Marine	At lower access door, and at top of ladder accessing the top deck.
Under service catwalks in mechanical rooms (if shown on drawings)	All	Area	As shown.
Other location as shown on drawings	All	As shown	As shown.

.2 Mount switches for service lights in accessible location on the outside of plenums and air handling units. Provide one switch for each AHU system.

.3 Provide one receptacle wired ahead of each service light switch, located between 300 mm (12 in) and 1200 mm (4 ft) above the floor.

3.14 Coordination and Division of Responsibility – Division 20 and Division 26

.1 Schedule A at the end of this Specification section specifies the division of responsibility between Division 20 and Division 26 for provision of electrical work for mechanical equipment, including termination of conductors.

.2 For clarity;

.1 the Division 20 electrical Work may be performed by the Division 26 contractor, but the work is managed and paid for by the Division 20 contractor.

.2 related work performed under Division 26 is listed in Schedule A for reference.

.3 Coordinate power requirements for mechanical trades equipment with the contractor under Division 26 of the work, including;

.1 provide a list of all planned and ordered mechanical trades equipment with motor horsepower ratings and electrical power requirements, prior to the Division 26 contractor procuring their power distribution equipment,

.2 periodically update this power requirements list as mechanical trades equipment is ordered, and review with the Division 26 contractor to allow them to revise breaker ratings in a timely manner,

.4 Where the branch circuit breaker rating requirements change as a result of the actual ordered mechanical trades equipment, coordinate and pay for any breaker and feeder changes required whether the affected work is in Division 20 or Division 26 scope of work.

3.15 Wiring Diagrams

.1 The following wiring diagrams are included at the end of this section:

.1 20 05 12 - 001 Mechanical – Electrical Coordination (Sheet 1 of 3)

.2 20 05 12 - 002 Mechanical – Electrical Coordination (Sheet 2 of 3)

.3 20 05 12 - 003 Mechanical – Electrical Coordination (Sheet 3 of 3)

.4 20 05 12 - 005 Rooftop Custom A.H.U. – Maintenance Receptacles

.5 20 05 12 - 006 Rooftop HVAC Equipment – Maintenance Receptacles

Schedule A – Coordination of Division 20 and 26 Scope of Work			
Reference	**Work Element**	**Div. 20**	**Div. 26**
All	Motor Control Centers, motor controller racks, motor controllers, VFDs, Mechanical Breaker Panels (MBP), and disconnect switches	●	
Mechanical Equipment at 1000 VAC and higher	Power wiring from Division 26 switchgear to: - motor controller, - between motor controller and the mechanical equipment (where motor controller is free-standing separate from the mechanical equipment) - field-installed disconnect switches, and wiring between the disconnect switch and the mechanical equipment		●
	Field-installed disconnect switches.		●
General Mechanical Equipment fed from Dedicated Power Panels for Mechanical Equipment (Note 1)	Mechanical Service Panels (MSP), including branch overcurrent protection devices.		●
	Power wiring from MSPs and/or MCCs to: - motors, including between motors and motor controllers, VFDs and/or disconnect switches as applicable, - packaged equipment, including disconnect switches as applicable, - equipment not requiring motor controllers or disconnect switches (control panels, heat tracing, etc.)	●	
	Power wiring from RP and/or MBP to: - motors, including between motors and motor controllers, - packaged equipment, including disconnect switches as applicable, - equipment not requiring motor controllers or disconnect switches (control panels, heat tracing, etc.)	●	
General Mechanical Equipment fed from Non-dedicated Power Panels (Note 2)	Non-dedicated Power Panels (PP) and receptacle panels (RP), including branch overcurrent protection devices.		●
	Distribution splitters		●
	Power wiring from PPs and/or distribution splitters to: - motor controller, - disconnect switch ahead of VFD, - disconnect switch for package equipment, - packaged equipment (with integral disconnect switch) - equipment not requiring motor controllers or disconnect switches (control panels, heat tracing, etc.)		●
	Power wiring from RP to: - motor controller or disconnect switch, - disconnect switch for package equipment, - packaged equipment (with integral disconnect switch), - equipment not requiring motor controllers or disconnect switches (control panels, heat tracing, etc.)		●

Schedule A – Coordination of Division 20 and 26 Scope of Work			
Reference	**Work Element**	**Div. 20**	**Div. 26**
	Power wiring from: - disconnect switch to a VFD, - motor controller or VFD to the motor, - disconnect switch to packaged equipment	●	
Terminal Units BAS Controllers	Power wiring for controllers at 120 V, single phase terminating in a junction box for each group of terminal boxes.		●
	Power wiring for controllers at 120 or 24 VAC, from junction box provided by Division 26 to each terminal unit controller.	●	
	Power wiring for controllers at 24 VAC/DC, from building automation system control panels to terminal unit box controller.	●	
	3 phase, 208 V and higher voltage wiring direct to terminal unit box.		●
BAS Controls and OEM Controls	In service rooms: provision of 120/208 VAC mechanical service panels (MSP) complete with 15 A breakers in service rooms for use by Division 20 to 25.		●
	In service rooms: where MCC's are used, dedicated 120 VAC mechanical breaker panels (BP) complete with 15 A breakers for use by Division 20 to 25.	●	
	Power wiring for controls in service rooms: wiring from MSP or BP to the BAS and OEM control equipment.	●	
	Other than service rooms: Dedicated 120V 15A normal and emergency branch circuit breakers as indicated on the receptacle panel schedules.		●
	Power wiring for controls other than in service rooms: wiring from dedicated circuits in receptacle panels to control equipment.	●	
	120 V, single phase power supply with a junction box at specific control devices as shown.		●
	Breaker tamper-protection locks.	●	
	Instrumentation and actuator power and control wiring, for both BAS controls and OEM controls.	●	
	Control wiring to interlock motor controllers and to connect safety and operating controls.	●	
Plumbing Fixtures	120 V, single phase power supply with a junction box with sufficient wiring to terminate at plumbing fixtures requiring control power		●
	Conduit from adjacent junction box or pull box to plumbing fixtures requiring control power, pulling of wiring to the plumbing fixture and termination of wiring to the fixture or primary side of control transformer.	●	
	Control transformers and extra-low voltage wiring	●	

Schedule A – Coordination of Division 20 and 26 Scope of Work			
Reference	**Work Element**	**Div. 20**	**Div. 26**
Medical Gas Equipment	Dedicated emergency power circuits 120 VAC, single phase for central and distributed medical gas alarm panels, terminated in the control panels.		●
	Control wiring between field installed instrumentation and medical gas alarm panels.	●	
Equipment Service Lights	120 VAC, 15A power circuits for equipment service lights, terminated in the equipment service light.		●
	120 VAC, 15A power circuits for equipment convenience receptacles, terminated in the receptacle.		●
	Power wiring from adjacent junction boxes to light switches/service convenience receptacles and fixtures	●	
	Equipment service lights, switches and convenience receptacles.	●	
Fire and Smoke Dampers	Power wiring to damper interlock control panels for smoke dampers, motorized fire dampers, and combination smoke/fire dampers.		●
	Wiring between damper interlock control panels (for smoke dampers, motorized fire dampers, and combination smoke/fire dampers), to their associated dampers.	●	
Life Safety Interface	[Fire Alarm System (“FAS”)control and monitoring modules located at BAS control interface panel.][Fire Alarm System (“FAS”) control and monitoring modules located at/near fan starter or damper actuator, and wiring between control module and damper motor and fan starter.]		●
	FAS control and monitoring modules located at/near sprinkler and standpipe supervised valves and flow switches including wiring between each module and the respective valve/flow switch.		●
	Wiring between FAS control and monitoring modules, and smoke control and smoke venting fans and dampers.		●
	Termination of FAS control and monitoring wiring in BAS panels	●	
Rooftop Maintenance Receptacles	Rooftop maintenance receptacle pedestals.	●	
	Power wiring from breaker panel (BP) to and terminating in the rooftop maintenance receptacles.		●

Notes:
[1] MPP and MBP will be located in mechanical services rooms.
[2] PP and RP are not dedicated for mechanical equipment and may be located in any type of service room or space.

LEGEND

- CONSTANT SPEED MOTOR CONTROLLER
- V — VARIABLE FREQUENCY DRIVE
- UNFUSED SERVICE DISCONNECT SWITCH
- FUSED SERVICE DISCONNECT SWITCH
- TRANSFORMER
- AC — 120 VAC/ XX VDC POWER SUPPLY, CLASS AS SHOWN
- MBP — 120/208 VAC MECHANICAL BREAKER PANEL
- MSP — MECHANICAL SERVICE PANEL (DIV 26)
- PP — POWER PANEL (DIV 26)
- JB — JUNTION BOX
- MOTOR
- ELECTRIC HEAT TRACING
- P.E. — PACKAGED EQUIPEMENT WITH MOTORS AND INTEGRAL MOTOR CONTROLLERS
- CP — CONTROL PANELS, TERMINAL UNIT CONTROLLERS, AND OTHER NON-MOTORIZED EQUIPMENT
- FUSE
- $ 120V — LIGHT SWITCH (FOR SERVICE LIGHTS) – FLOOR PLAN
- POWER SWITCH (SINGLE-LINE)
- SERVICE LIGHT
- B — ALARM BEACON

- 26/20 — SCOPE OF WORK: DIVISION "A" / DIVISION "B" BOUNDARY
- WIRING AND/OR EQUIPMENT BY DIVISIONS 20-25
- WIRING AND/OR EQUIPMENT BY DIVISION 26

General Notes

1. This drawing indicates general coordination of mechanical and electrical work. Refer to plan and riser drawings and specifications for project specific requirements, which take precedence over this drawing.

HHAngus	Sheet Title: MECHANICAL – ELECTRICAL COORDINATION BLOCK DIAGRAM (SHEET 1 OF 3)	Date: 21 JUNE 2023	Rev. No.: 03	Checked: PS
		Standard Detail No.: 20 05 12 - 001		

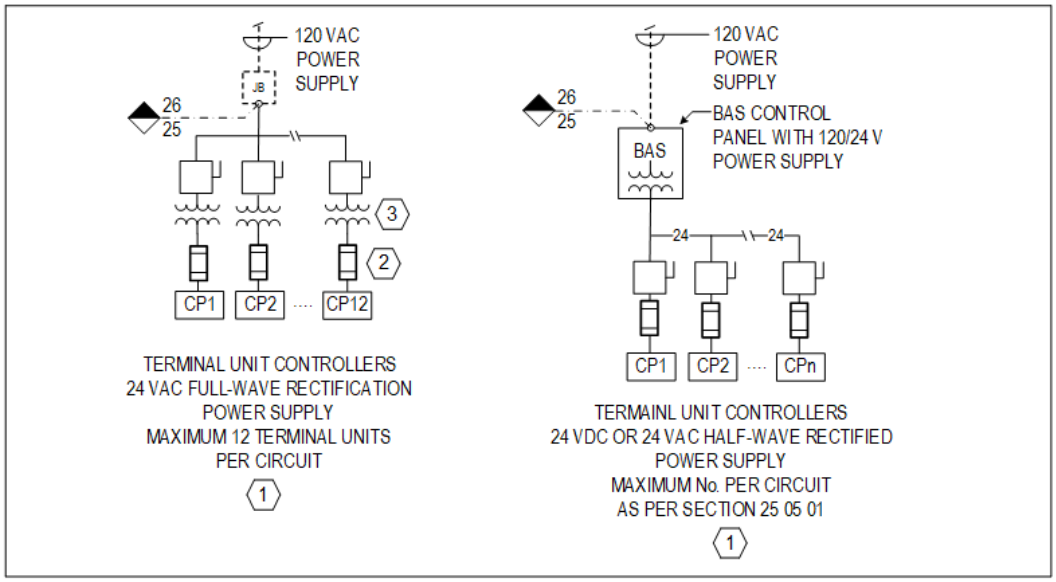

TERMINAL UNITS

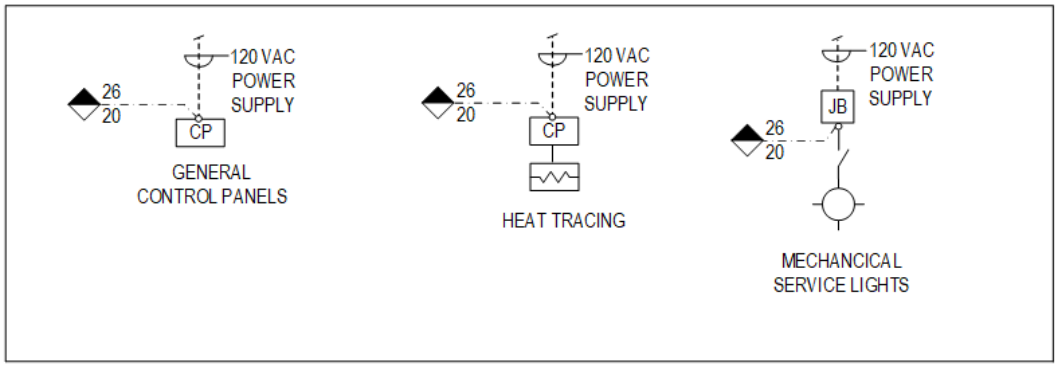

MISCELLANEOUS EQUIPMENT

DRAWING NOTES
(NOTES AND NUMBERING BELOW PERTAINS TO THIS DRAWING ONLY)

1. REFET TO SPECIFICATION SECTION 25 05 01 FOR APPLICABLE WIRING METHODS.
2. PROVIDE FUSE PROTECTION IF TRANSFORMER DOES NOT HAVE INTEGRAL CIRCUIT BREAKER.
3. PROVIDE DEDCICATED TRANSFORMER FOR FULL-WAVE RECTIFIED 24 VAC CONTROL DEVICES.

HHAngus	Sheet Title: MECHANICAL – ELECTRICAL COORDINATION BLOCK DIAGRAM (SHEET 2 OF 3)	Date: 21 JUNE 2023	Rev. No.: 03	Checked: PS
		Standard Detail No. 20 05 12-002		

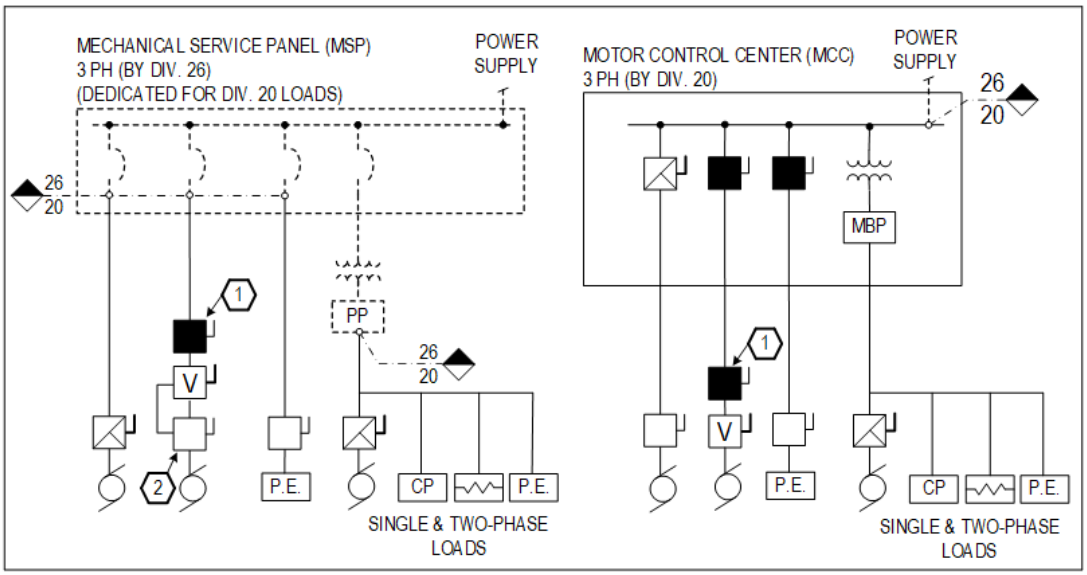

DEDICATED POWER DISTRIBUTION EQUIPMENT

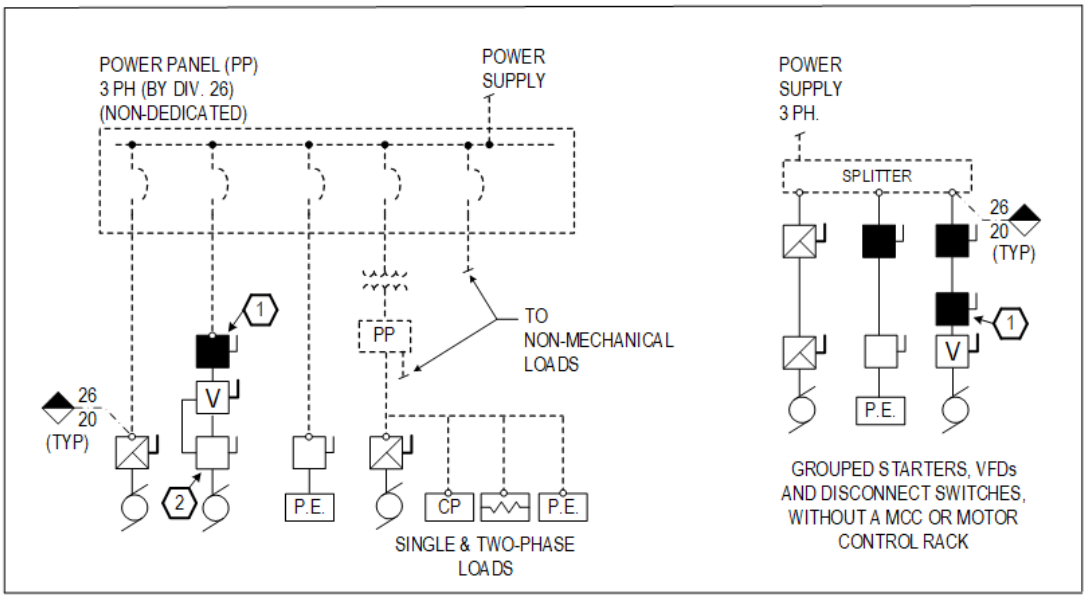

NON-DEDCATED POWER DISTRIBUTED EQUIPMENT

DRAWING NOTES
(NOTES AND NUMBERING BELOW PERTAINS TO THIS DRAWING ONLY)

1. SEPARATE FUSED DICSONNECT WHEN REQUIRED TO MEET SPECIFIED SCCR VALUES. (TYP).
2. SEPARATE UNFUSED DISCONNECT WHERE V.F.D. IS REMOTE FROM THE MOTOR. PROVID DISCONNECT SWITCH POSITION INDICATOR WITH INTERLOCK WIRING TO THE V.F.D. (TYP).

General Notes

1. This drawing indicates general coordination of mechanical and electrical work. Refer to plan and riser drawings and specifications for project specific requirements, which take precedence over this drawing.
2. Dedicated power distribution equipment is only located in mechanical service rooms.

HHAngus	Sheet Title: MECHANICAL – ELECTRICAL COORDINTION BLOCK DIAGRAM (SHEET 3 OF 3)	Date: 21 JUNE 2023	Rev. No.: 04	Checked: PS
		Standard Detail No.: 20 05 12 – 003		

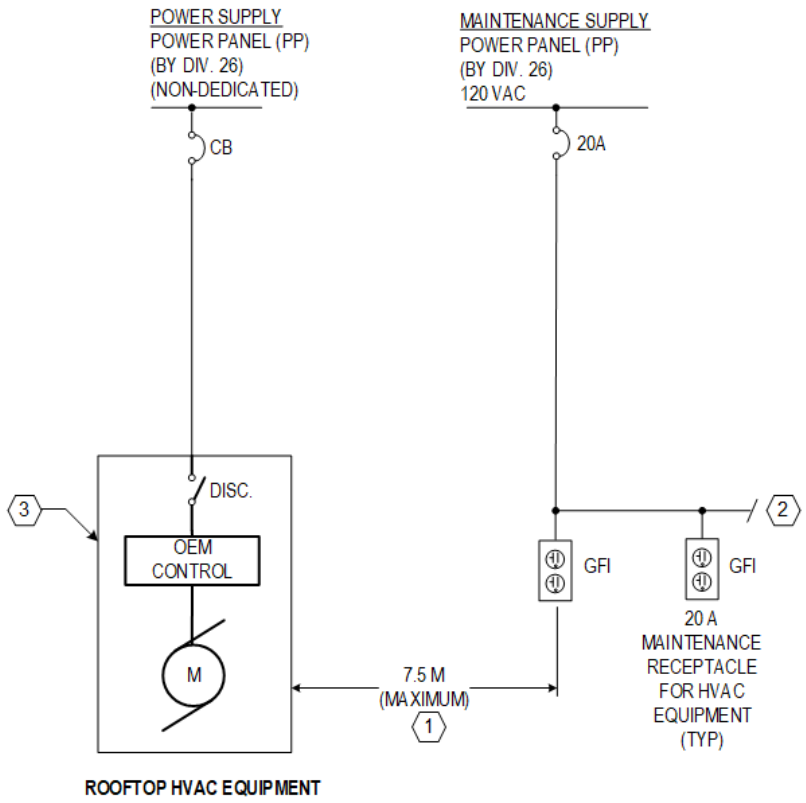

ROOFTOP HVAC EQUIPMENT

DRAWING NOTES
(NOTES AND NUMBERING BELOW PERTAINS TO THIS DRAWING ONLY)

1. ONE MAINTENANCE RECEPTACLE CAN SERVE MULTIPLE HVAC UNITS, PROVIDED MAXIMUM DISTANCE TO EACH UNIT IS MAINTAINED.
2. ONE BRANCH CIRCUIT MAY SERVE MULTIPLE MAINTENANCE RECEPTACLES DEDICATED TO HVAC EQUIPMENT.
3. "ROOFTOP HVACE EQUIPMENT" MEANS ALL ROOFTOP EQUIPMENT EXCEPT ROOF FANS WHICH DO NOT HAVE AN INTEGRAL O.E.M. MOTOR CONTROLLER.

General Notes
1. This drawing indicates general wiring requirements for rooftop equipment power wiring and maintenance service wiring. Refer to specifications for coordination of work under Division 20 and 26.

2. Refer to detail drawings 20 05 12-001 and 20 05 12-002 for coordination of work under Division 20 and Division 26.

HHAngus	Sheet Title: ROOFTOP HVAC EQUIPMENT MAINTENANCE RECEPTACLES	Date: 21 JAN 2022	Rev. No.: 01	Checked: PS
		Standard Detail No.: 20 05 12 - 005		

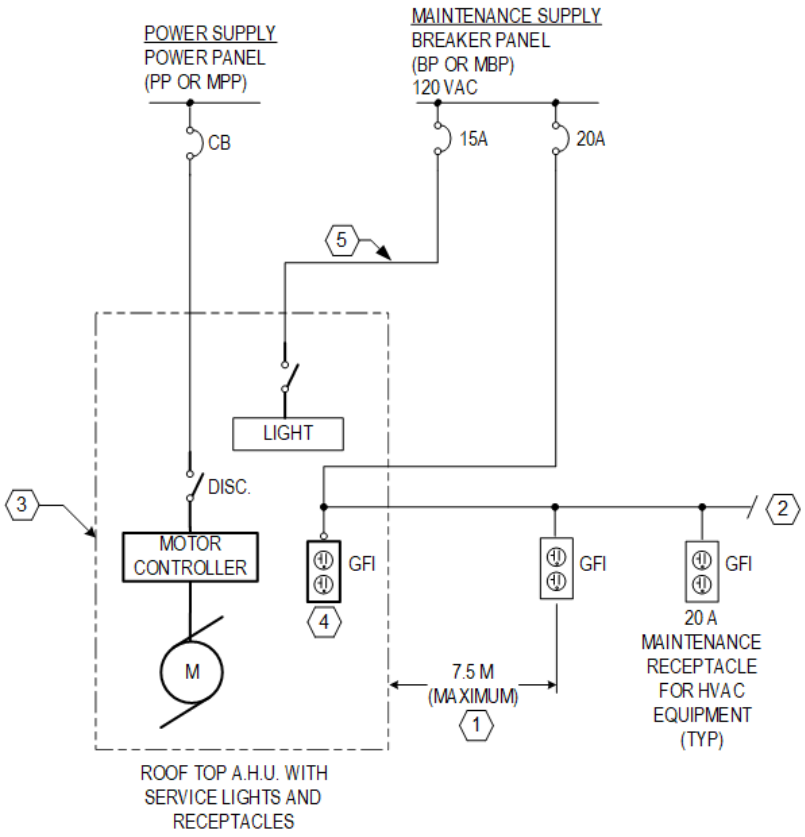

DRAWING NOTES
(NOTES AND NUMBERING BELOW PERTAINS TO THIS DRAWING ONLY)

1. ONE MAINTENANCE RECEPTACLE CAN SERVE MULTIPLE HVAC UNITS, PROVIDED MAXIMUM DISTANCE TO EACH UNIT IS MAINTAINCED.
2. ONE BRANCH CIRCUIT MAY SERVE MULTIPLE MAINTENANCE RECEPTACLES DEDICATED TO ROOFTOP EQUIPMENT MAINTENANCE.
3. "ROOFTOP HVAC EQUIPMENT" MEANS ALL ROOFTOP EQUIPMENT EXCEPT ROOF FANS WHICH DO NOT HAVE AN INTEGRAL O.E.M. MOTOR CONTROLLER.
4. MAINTENANCE RECEPTACLES MAY BE LOCATED INSIDE AIR HANDLING UNIT SERVICE CORRIDOR; SEPARATE EXTERNAL RECEPTACLE IS NOT REQUIRED.
5. MAINTENANCE LIGHTS INSIDE HVAC EQUIPMENT ON SEPARATE BRANCH CIRCUIT THAN MAINTENANCE RECEPTACLES.

General Notes
1. This drawing indicates general wiring requirements for rooftop equipment power wiring and maintenance service wiring. Refer to specifications for coordination of work under Division 20 and 26.

2. Refer to detail drawings 20 05 12-001 and 20 05 12-002 for coordination of work under Division 20 and Division 26.

HHAngus

Sheet Title
ROOFTOP CUSTOM A.H.U.
MAINTENANCE RECEPTACLES

Date	Rev. No.:	Checked
21 JAN 2022	01	PS

Standard Detail No.
20 05 12 - 006

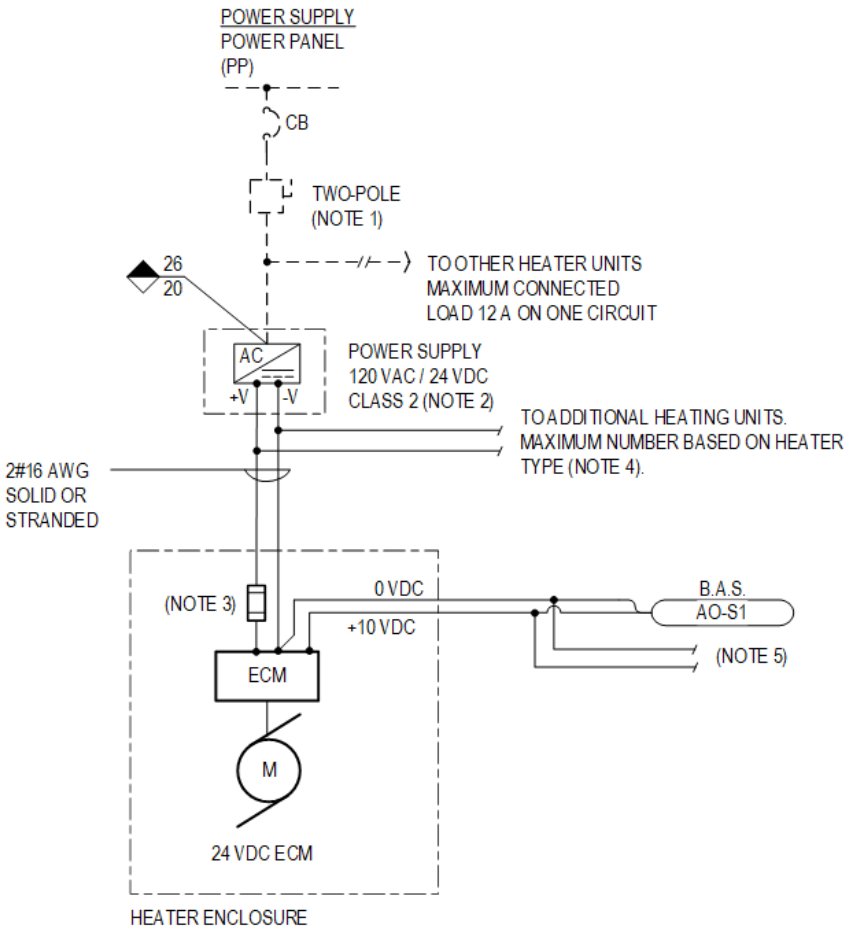

REFERENCE NOTES

1. DISCONNECT BOTH LINE AND NEUTRAL.
2. POWER SUPPLY MOUNTED IN TYPE 1 ELECTRICAL ENCLOSURE AND MOUNTED WITHIN 10 M (30 FT) OF FIRST HEATER SERVED AS SHOWN..
3. PROVIDE FUSE OF AMPERE RATING AS SPECIFIED BY HEATING EQUIPMENT MANUFACTURER.
4. REFER TO PLAN DRAWINGS FOR NUMBER OF INDIVIDUAL HEATER UNITS SERVED BY THE SAME 24 VDC POWER SUPPLY.
5. THE SAME B.A.S. OUTPUT MAY CONTROL MULTIPLE HEATER UNITS IN THE SAME ZONE.

GENERAL NOTES

1. THIS DRAWING INDICATES GENERAL WIRING REQUIREMENTS FOR 24 VDC FAN-COIL HEATING UNITS. REFER TO EQUIPMENT MANUFACTURER INSTALLATION INSTRUCTIONS FOR SPECIFIC WIRING REQUIREMENTS.
2. REFER TO DETAIL DRAWINGS 20 05 12-001 AND 20 05 12-002 FOR GENERAL COORDINATION OF WORK UNDER DIVISIONS 20 AND 26.

HHAngus	Sheet Title: FORCED-AIR CONVECTORS 24 VDC & CONTROL WIRING	Date: 08 DEC 2022	Rev. No.: 00	Checked: PS
		Standard Detail No.: 20 05 12 - 007		

END OF SECTION

GENERAL REQUIREMENTS FOR VALVES
20 05 23

1 GENERAL

1.1 Scope

.1 Provide valves in piping systems for shut-off service, manual flow balancing, check-stops and valve bodies for automatic flow control.

.2 This specification section provides general requirements for valves.

1.2 Related Sections

.1 Refer to the following valve specification sections for requirements for general-duty valves in addition to the general requirements specified herein.

21 05 23	General-Duty Valves for Water-Based Fire-Suppression Piping
22 05 23.13	General-Duty Valves for Plumbing Piping
22 05 23.16	Valves for Underground Water Service Piping
22 05 23.19	General-Duty Valves for Sewage Systems
22 15 16	General Service Compressed-Air Valves
23 05 23.13	General-Duty Valves for HVAC Water Piping
23 05 23.19	Stainless Steel Valves for HVAC Water Piping
23 05 23.23	General-Duty Valves for Steam System Piping
23 05 23.26	Valves for Steam Boiler Plant Piping
23 05 23.29	Stainless Steel Valves for Clean Steam System Piping

.2 Refer to the following specifications sections for requirements for specific-duty valves in addition to the general requirements specified herein.

22 31 16	Commercial Water Softeners
22 53 13	Irrigation System
22 60 13.54	Laboratory Gas Piping – Copper
22 60 13.55	Laboratory Gas Piping – Stainless Steel
22 60 13.70	Medical Gas Piping
22 67 13	Process Water Piping for Laboratories and Healthcare Facilities
23 11 13	Facility Fuel Oil Piping and Accessories
23 11 23	Facility Natural Gas Piping and Accessories
23 24 17.16	Services for Selective Catalytic Reduction System
23 24 19	Diesel Exhaust Fluid Systems
23 27 13	Vacuum Insulated Piping – Cryogenic Service
23 26 13	Instrumentation Piping and Accessories
23 26 16	Process Tubing and Accessories – Stainless Steel
23 26 19	Vacuum Insulated Piping – Cryogenic Service
23 61 05	Refrigeration - Field Constructed

23 61 07	Refrigeration Piping – HVAC
25 35 01	Building Automation Compressed Air Supply

1.3 Submittals

.1 Submit manufacturer product data-sheets for valves, including pressure-temperature ratings with confirmation that the valve meets the required MCPR rating specified for each valve.

.2 Where valves are specified to be listed (certified) to a standard, include the following information for each affected product:

.1 applicable standard by name and reference number,

.2 name of accredited testing organization or their mark who certified the product, and

.3 the testing organization file reference number.

.3 Where valves are required to have a CRN, include the CRN and its expiry date on each valve submittal.

.4 Where manufacturer pre-printed data-sheets do not include this information, a schedule may be submitted which includes the manufacturers name, model number and the required listing and/or CRN information described above. Where the product is name-branded for a manufacturer, include the name of the source manufacturer.

1.4 Applicable codes and standards

.1 Legislation:

.1 Valves installed in piping systems which are subject to provincial or federal pressure piping legislation shall have current Canadian Registration Numbers (“CRN”) in accordance with CSA B51.

.2 Installation standards, codes and guidelines:

.1 CSA B51 Boiler and Pressure Vessel Code.

.2 Refer to applicable piping specification sections for any other specific requirements.

.3 Product standards:

.1	ANSI/ASME B1.20.1	Pipe Threads, General Purpose, Inch
.2	ASME B16.1	Cast Iron Pipe Flanges and Flanged Fittings
.3	ASME B16.5	Pipe Flanges and Flanged Fittings
.4	ASME B16.10	Face-to-Face and End-to-End Dimensions of Valves
.5	ASME B156.24	Cast Copper Alloy Pipe Flanges and Flanged Fittings
.6	ASME B16.34	Valves Flanged, Threaded and Welding Ends
.7	ASME B16.47	Large Diameter Steel Flanges: NPS 26 Through NPS 60
.8	ISO 5211	Industrial Valves – Part-turn Actuator Attachments
.9	MSS SP-25	Standard Marking System for Valves, Fittings, Flanges, and Unions
.10	MSS SP-42	Corrosion-Resistant Gate, Globe, Angle, and Check Valves with Flanged and Butt Weld Ends (Classes 150, 300, & 600)
.11	MSS SP-67	Butterfly Valves
.12	MSS SP-68	High Pressure Butterfly Valves with Offset Design
.13	MSS SP-70	Cast Iron Gate Valves, Flanged and Threaded Ends
.14	MSS SP-71	Cast Iron Swing Check Valves, Flanged and Threaded Ends

.15	MSS SP-72	Ball valves with Flanged or Butt-Welding ends for General Service
.16	MSS SP-78	Cast Iron Plug Valves
.17	MSS SP-80	Bronze Gate, Globe Angle and Check Valves
.18	MSS SP-85	Cast Iron Globe and Angle Valves, Flanged and Threaded Ends
.19	MSS SP-110	Ball Valves Threaded, Socket-Welding, Solder Joint, Grooved and Flared Ends
.20	MSS SP-125	Gray Iron and Ductile Iron In-Line, Spring-Loaded, Center-Guided Check Valves
.21	MSS SP-126	In-Line, Spring-Assisted, Center-Guided Check Valves (Carbon, Alloy Steel, Stainless Steel, & Nickel Alloys)
.22	MSS SP-136	Ductile Iron Swing Check Valves
.23	MSS SP-139	Copper Alloy Gate, Globe, Angle, and Check Valves for Low Pressure/Low Temperature Plumbing Applications
.24	NSF/ANSI 61	Drinking Water System Components – Health Effects
.25	NSF/ANSI 372	Drinking Water System Components – Lead Content (formerly NSF/ANSI 61- Annex G).

1.5 Quality and Equivalence

.1 Valve selections are in general identified by model designations taken from manufacturers catalogues to indicate physical properties and quality requirements not otherwise described.

2 PRODUCTS

2.1 General

.1 Refer to related specification sections.

.2 Manufactures and/or trade names listed in Table 1 are acceptable for various indicated valve types, where products offered are essentially similar to those identified by manufacturer or model number under “Standard of Acceptance” designation in the related specification sections.

.1 Refer to the General-duty valve specification sections and specific-duty valve requirements contained in the related piping system specification sections.

.2 Additional specification requirements and/or certification requirements may be required by those sections.

Manufacturer	Gate, Globe, Angle, Check	Silent Check	DRV	Butterfly	Plug	Ball
A-Chem Valves & Controls	●			●		●
American Valve						●
APCO		●				
Apollo				●		●
Bonney Forge	●					
Beric	●					
Bray				●		●

Manufacturer	Gate, Globe, Angle, Check	Silent Check	DRV	Butterfly	Plug	Ball
Canadian Worcester Controls						●
Challenger				●		
Couplox				●		
Crane	●			●		●
Crane Centreline				●		
Crane Flowseal				●		
Dahl Bros	●					●
Demco				●		
DeZurik				!		
Durabla		●				
Grinnell				●		
Gruvlok				●		●
Hattersley Milliken (Crane)					●	
Jenkins	●			●		●
Keystone				●		
Kitz	●			●		●
MA Stewart (MAS)	●					●
Milwaukee Valve				●		●
Mueller		●		●	●	
Neo Valves	●					●
Nibco	●	●		●		●
Nordstrom					●	
Powell	●					
Preso			●			
S.A. Armstrong	●		●			
Shurjoint				●		●
Sure Seal				●		
Tour & Anderson			●			
Toyo Valve (Red &White)	●					●
Triad				●		
Trueline	●					●
Valmatic		●				
Velan	●			●		●
Victaulic				●		●
Watts	●			●		●
WKM				●		

3 EXECUTION

3.1 Valve Selection Criteria

.1 Select valves in accordance with function criteria as shown in Table 2.

Table 2: Valve Function Selection

Function	Gate	Butterfly	Ball	Globe	Plug	DRV
Shut-Off	●	●	●		●	
Flow balancing and shut-off					● [1] [2]	●
Flow Balancing only (excluding pumps)				●		●
Pump Balancing		● [1] [3]		●		●

Notes:

[1] Gear operator with position limit memory stops.

[2] Non-lubricated plug valve designed for flow balancing.

[3] Sized one (1) NPS line size smaller than pipe line size (not pump discharge size).

3.2 Piping System Drain Valves

.1 Provide drain valves on piping and at equipment as follows unless otherwise shown on drawings:

.1 On pipe mains and branches NPS 3 and under, and for equipment with pipe connections NPS 4 and smaller:

(a) NPS ¾ ball valve in accordance with pipe system specification with integral NPSH ¾ hose end with cap and chain.

.2 On pipe mains NPS 4 to NPS 6, and for equipment with pipe connections NPS 6 and larger:

(a) NPS 1 ball valve, with a NPT threaded brass Cam and Groove female coupler fitting with dust-plug

.3 On pipe mains NPS 8 and larger:

(a) NPS 2 ball valve, with a NPT threaded brass Cam and Groove female coupler fitting with dust-plug.

3.3 Valve Installation - General

.1 Install shut off valves at:

.1 branch take-offs,

.2 to isolate piping to each piece of equipment, and

.3 in locations shown.

.2 Remove internal parts of valves before soldering, welding or brazing pipe to valve body.

.1 Exception: where valve is provided with tube end extensions to allow soldering or brazing without removal of internal parts.

.2 For valves which do not permit disassembly including ball valves and inline check valves, comply with valve manufacturer instructions to protect valve internal components during soldering, brazing or welding.

.3 Install triple duty or throttling valves where shown in pump discharge piping with ten pipe diameters of straight pipe on the inlet side and two pipe diameters on outlet side.

.4 Install butterfly valves between weldneck or slip-on flanges.

3.4 Valve Orientation and Accessibility

.1 Arrange valve hand-wheels and operating levers to be accessible.

.2 In equipment rooms and service spaces provide chain operators for valves mounted more than 2m (6 ft) above floor or access platform. Provide sufficient chain length to extend to 1.5m (4 ft-6 in) above floor or platform and to be hooked on clips secured to building structure, clear of walking aisles.

.3 In horizontal piping (see figure 1);

.1 For OS&R valves, install the valve with stem vertical where the valve centerline is not more than 1200 mm above the adjacent floor or access platform. For greater heights, install the valve with stem horizontal. Where space is restricted, the valve may be installed with the valve spindle at a 45° angle from the vertical where the valve centerline is not more than 1500 mm above the floor or access platform.

.2 For gear operated valves, install with gear-box on top of the valve and hand-wheel shaft in the horizontal position.

.3 For lever operated valves, install with handle on top of valves where the valve centerline is not more than 1500 mm above the floor or access platform. Where spaces is restricted, the valve may be positioned with the lever handle shaft in the horizontal position. For greater heights, install valves with handle shaft in the horizontal position.

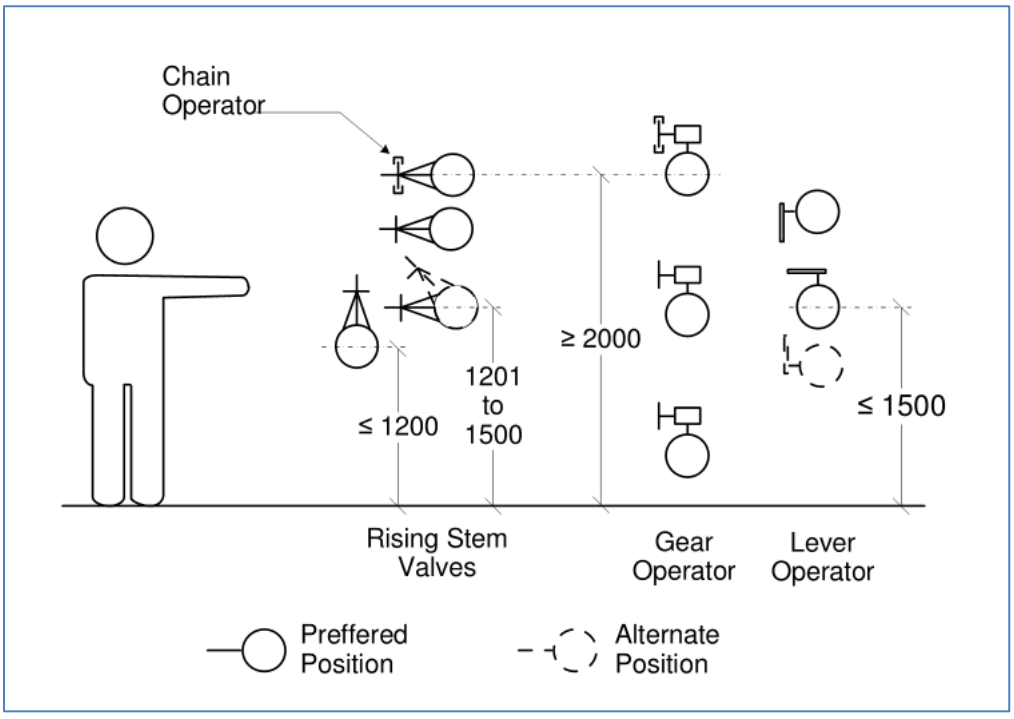

Figure 1: Valve Spindle Arrangement

.4 In vertical piping, install with valve stem facing directly towards the means of access. Where access space in front of the valve is less than 900 mm (36 in), rotate the valve 45° from the straight forward position.

END OF SECTION

Master Revised: 8 August 2023

COMMON HANGER AND SUPPORT REQUIREMENTS FOR PIPING
20 05 29

1 GENERAL

1.1 Scope

.1 Provide hangers and supports for piping, including insulation protection devices.

.2 The requirements of this specification section apply to all piping systems, except where required otherwise by specific piping specification sections including:

.1 20 05 06 Rooftop Supports for Building Services and Equipment

.2 20 05 16 Flex Connections, Expansion Joints, Anchors and Guides

.3 21 05 01 Common Work Results for Fire Suppression

.4 22 60 13.53 Laboratory Gas Piping General Requirements

.5 22 60 13.70 Medical Gas Piping

.6 23 11 13 Facility Fuel Oil Piping and Accessories

.7 23 11 23.13 Facility Natural Gas Piping and Accessories

.8 Applicable sections of Division 22 sections for plumbing and drainage piping,

.3 Provide engineering services associated with the design, analysis, and selection of custom piping supports, including pipe riser supports.

.4 [][Where the building is constructed of mass timber wholly or in part, upper attachments for connection to wood structural elements is to conform to the requirements of specification section 20 05 29.16 in addition to the requirements of this section.]

1.2 Related Work

.1 Without limiting the scope of work or applicability of other specification sections, the work under this section directly integrates with or refers to the following specification sections:

.1 20 05 06 Rooftop Supprots for Building Services and Equipment

.2 20 05 16 Flex Connections, Expansion Joints, Anchors and Guides

.3 20 05 48 Vibration Isolation

.4 20 05 49 Seismic Restraints for Mechanical Services

.5 20 07 19 Piping Insulation

1.3 Definitions and Abbreviations

.1 The following definitions apply to this section:

.1 ***Ambient piping***: piping with a fluid temperature greater than 16°C (61°F) and up to and including 40°C (104°F).

.2 ***Cold piping***: piping with a fluid temperature greater than 4°C (39°C) and up to and including 16°C (61°F).

.3 ***Dual temperature piping***: piping which operates non-simultaneously as both cold piping and hot piping depending on the season.

.4 ***Hot piping***: piping with a fluid temperature greater than 60°C (140°F).

.5 ***Low temperature piping***: piping with a fluid temperature greater than 40°C (104°F) and up to and including 60°C (140°F)

1.4 Applicable Codes and Standards

.1 Product and installation codes and standards:

.1	ANSI/MSS SP-58	Pipe Hangers and Supports – Materials, Design, Manufacture, Selection, Application, and Installation
.2	CAN/UL 203	Standard for Pipe Hanger Equipment for Fire Protection Service

.2 Refer to each applicable piping specification section for supplemental requirements for pipe supports.

1.5 Analysis, Design, and Inspection Services

.1 Where custom fabricated pipe and equipment supports are proposed to be used, provide the services of a professional engineer, licensed in the province or territory of the Work and who specializes in the design of piping and equipment supports (the “Specialty Engineer”), for the design of piping and equipment support systems and to provide inspection services of the completed installation.

.2 Provide services of a Specialty Engineer for the design and selection of constant-load and variable-load hanger supports. Where a manufacturer of such equipment provides this design service, this is deemed to meet this requirement.

.3 Specialty Engineer design services to include;

.1 provide the design of the piping support system, including anchors, guides, expansion joints, and shall include seismic restraints where applicable,

.2 analysis of dead loads, thermal expansion loads, wind load, static seismic loads (where applicable) and capacity of materials utilized for connections to equipment and structure.

.3 provide design drawings showing locations of supports, restraints and details of construction and attachment of supports and restrains,

.4 seismic design to conform to Specification section 20 05 49 where applicable.

.4 Specialty Engineer inspection services to include:

.1 at periods during installation and at completion of the installation of the piping supports and anchor devices, the Specialty Engineer shall inspect the installation, identify and report deficiencies (if any) which are observed, and re-inspect the installation after deficiencies have been corrected,

.2 Specialty Engineer to submit periodic inspection reports and a final inspection report after all work is completed and deficiencies have been corrected, confirming the installation conforms to the design requirements. Prepare and submit any required declarations or similar document to this effect where required by local legislation. Include in the final report site photographs of the complete installation prior to covering with insulation, with specific photos at pipe anchors, guides, and expansion joints.

.5 Provide shop drawings of custom supports, which shall be sealed by the Specialty Engineer.

.6 Provide signed declarations for commitment for general review and final review letters of conformity as required by applicable legislation at the place of the Work.

1.6 Design Criteria

.1 The support spacing and hanger rod size specified herein is based on supporting a single pipe directly from the structure in accordance with MSS SP-58. If multiple pipes are supported from trapeze hangers (or similar), or from common hanger rods supporting a tier of multiple piping, then;

.1 the total load on the support rods or similar elements shall not exceed published tension load rating data in accordance with Table 2 of MSS SP-58.

.2 design of custom trapeze hangers shall meet the design criteria as specified in Part 2 of this section.

.2 Provide complete custom engineered design services in accordance with the requirements of MSS SP-58 for support of vertical piping for the following portions of the Work:

.1 vertical piping located in vertical services spaces (shafts) where any of the following criteria apply;

(a) piping is NPS 8 and larger,

(b) the vertical pipe length exceeds 25 m (82 ft),

(c) pipe expansion joints are shown, or

(d) vibration isolated supports, variable spring supports or constant load supports are shown.

.2 where horizontal piping is supported on;

(a) trapeze hangers or supported on/suspended from horizontal structural elements, or

(b) pipe racks.

.3 Where the mechanical system are required to have seismic restraints, this section is to be read in conjunction with the requirements of Specification section 20 05 49.

1.7 Submittals

.1 Submit manufacturer product data sheets for hanger components, and include:

.1 load ratings,

.2 typical composite detail drawings for complete hanger assembly, including upper attachment, hanger rods, hanger rod swivels, pipe attachments, shields and saddles, and load ratings, for each pipe condition and size.

.2 Submit support details for glass, fibre-reinforced plastic, and other plastic piping systems which are coordinated with the piping material manufacturer installation instructions.

.3 Where variable spring supports or constant load supports are shown, provide completely engineered design and fabrication drawings, including any supplementary steel requirements, and loads transferred to the building structure.

.4 Submit engineered design drawings for fabricated trapeze hangers and completely engineered support systems, including

.1 construction detail drawings for each loading condition,

.2 span deflection calculations,

.3 building attachment load calculations and type.

.4 shop drawings to be sealed by a professional engineer licensed in the project location jurisdiction.

.5 Where custom designed supports are proposed, shop drawings are to be sealed by a professional engineer licensed in the place of the Work.

1.8 Quality Control

.1 Where custom engineered supports are used, provide the services of a specialist professional engineer licensed in the location of the Work, to design the support systems and to conduct an inspection of the completed installation that it is in general conformance with the sealed shop drawing requirements, and submit an inspection report to the Owner and the Consultant.

2 PRODUCTS

2.1 General

.1 Fabricate pipe hangers, supports, sway braces and associated components from stock or production parts, manufactured and fabricated in conformance with MSS SP-58, and the requirements of the piping code specified for each piping system.

.2 Pipe hangers and supports for fire protection systems to be listed to CAN/UL 203, except where such listing requirement is excluded under applicable NFPA standards.

.3 Select elements of pipe support systems to provide adequate factors of safety under loads applied by gravity, by temperature induced expansion and contraction, by internal pressure in mechanically jointed plain end pipe, and by fluid flow pressure thrust.

.4 Where specified products define the applicable pipe size NPS range (notwithstanding that the product may be available for larger pipe sizes), the maximum specified pipe size is limited to not exceed the load rating of the specified product under maximum allowable pipe spans as defined in MSS SP-58 for insulated pipe filled with water.

.5 Product finishes (unless otherwise specified for each product):

.1 outdoors: hot dipped galvanized,

.2 in mechanical service rooms, pipe tunnels and pipe trenches: zinc-plated or hot-dipped galvanized,

.3 within data server and switch equipment rooms: plain carbon or hot-dipped galvanized,

.4 all other indoor locations: plain carbon steel or zinc-plated steel.

.6 Select pipe support products from manufacturers standard product line.

Standard of Acceptance

- Anvil
- Unistrut
- Taylor
- Acrow Richmond
- Portable Pipe Hangers
- Hilti
- nVent Caddy
- Pipe Shields
- Buckaroos

2.2 Upper Attachments – Inserts for New Concrete

.1 General:

.1 upper hanger attachment for casting into new cast-in-place concrete decks, for piping or equipment supports,

.2 for attachment to formwork prior to concrete pour,

.3 designed to receive USS coarse thread hanger rods.

.4 in the following tables, pipe size limit is based on insulated pipe filled with water at the maximum allowable span in accordance with Schedules A1(a), A2(a), and A3 at the end of this section. Larger pipe sizes may apply where reduced spans are used in accordance with the alternate rod size and support span limits in accordance with Schedules A1(b) and A2(b) as the end of this section.

.2 Fixed rod position:

.1 fixed position type,

.2 listed to CAN/UL 203 for fire protection piping, for pipe NPS ¾ through NPS 8,

.3 materials: malleable iron, or zinc-plated carbon-steel with plastic form, with nailing feature,

.4 minimum load rating in tension based on connected rod size:

Rod Nominal Size	Tension Load kN (lbf)	Single Pipe Size Limit NPS
Ø3/8	3.25 (730)	2
Ø1/2	5.0 (1130)	3
Ø5/8	5.6 (1260)	4
Ø3/4	11.1 (2500)	8

Standard of Acceptance

- Anvil - fig. 152
- Hilti - fig. KCM

.3 Fixed rod position – high capacity:

.1 fixed position type,

.2 stainless steel insert body, with two (2) fibreglass and concrete barrier disc for attachment to concreate rebar,

.3 minimum load rating in tension based on connected rod size:

Rod Nominal Size	Tension Load kN (lbf)	Single Pipe Size Limit NPS
Ø3/4	14.4 (2500)	8
Ø7/8	19.9 (4480)	12
Ø1	26.2 (5900)	18
Ø1-1/4	42.2 (9500)	20
Ø1-1/2	61.4 (13,800)	30

Standard of Acceptance

- Anvil - fig. 286

.4 Single-direction adjustable rod position:

.1 listed to CAN/UL 203 for fire protection piping, for pipe NPS ¾ through NPS 8.

.2 galvanized wedge inserts to MSS SP-58 type 18, with single-direction adjustment of rod position,

.3 minimum load rating in tension based on connected rod size:

Rod Nominal Size	Tension Load kN (lbf)	Single Pipe Size Limit NPS
Ø3/8	3.25 (730)	2
Ø1/2	5.0 (1130)	3
Ø5/8	5.6 (1200)	4
Ø3/4	11.1 (1200)	8

Standard of Acceptance

- Anvil - fig. 281
- Unistrut - fig. P-3245

.5 Concrete inserts – channel type;

.1 single hanger or multiple hangers support,

.2 2.75 mm (12 Ga) thick channels, hot-dipped galvanized, with concrete embedment tabs, open bottom channel allowing multiple support points and lateral position adjustment,

.3 with back plates, end caps and closure strips to prevent concrete spillage into channel space,

.4 minimum point load spacing: 300 mm (12 in.)

.5 maximum tension load rating for single hanger support:

Channel Length mm (in.)	Tension Load kN (lbf)	Tension Load kN/m (lbf/ft)	Single Pipe Size Limit NPS
200 (8)	4.4 (1000)	---	6
300 (12)	6.6 (1500)	---	8
450 (18)	17.8 (4000)	23.8 (2000)	12

Standard of Acceptance

- Unistrut - fig. P-3249 to P-3270 series.

2.3 Upper Attachments – Anchors for Existing Concrete

.1 General:

.1 upper hanger attachment for anchoring into existing concrete decks, for piping or equipment supports,

.2 designed to receive USS coarse thread hanger rods.

.2 Drop-in anchors:

.1 zinc-plated carbon steel drop-in friction anchor design, with matched drill bit and setting tool,

.2 not to be used for seismic restraints or hanger rods at pipe hangers having seismic restraint,

.3 rated for uncracked concrete,

.4 listed to CAN/UL 203 for fire protection piping, for pipe NPS ¾ through NPS 8,

.5 capacity rating with 4:1 safety factor to ultimate load,

.6 minimum load rating in tension based on connected rod size:

Rod Nominal Size	Tension Load kN (lbf)	Single Pipe Size Limit NPS
Ø3/8	2.82 (635)	2
Ø1/2	4.2 (945)	3
Ø5/8	8.34 (1875)	4
Ø3/4	11.1 (2500)	8

Standard of Acceptance

° Hilti - fig. HDI, HDI+, HDI-L+

.3 Wedge anchors:

.1 anchor-end wedging action on concrete, and not relying on friction between side of bolt and concrete hole wall,

.2 zinc-plated carbon steel wedge anchor design with load washer and nut,

.3 wedge anchor capacity as specified herein to be rated for cracked concrete having not less than 20 MPa (2900 psi) strength.

.4 rated for cracked and uncracked concrete,

.5 listed for seismic tension and shear loads in accordance with ACI 355.2 and ICC-ES AC193.

.6 listed to CAN/UL 203 for fire protection piping, for pipe NPS ¾ through NPS 8,

.7 extra-long bolt length to allow attachment of hanger rod coupling with full thread engagement in the coupling, while providing required load engagement length,

.8 standard rating: minimum load rating in tension based on connected rod size:

Rod Nominal Size	Tension Load kN (lbf)	Single Pipe Size Limit NPS
Ø3/8	4.85 (1090)	2
Ø1/2	7.52 (1690)	3
Ø5/8	12.1 (2715)	4
Ø3/4	15.5 (3495)	8

Standard of Acceptance

° Hilti - fig. Kwick Bolt series

.9 high-capacity rating: minimum load rating in tension based on connected rod size:

Rod Nominal Size	Tension Load kN (lbf)
Ø3/8	14.0 (3150)
Ø1/2	20.8 (4675)
Ø5/8	29.1 (6535)
Ø3/4	40.6 (9135)
Ø7/8	53.4 (12,000)

Standard of Acceptance

° Hilti - fig. HSL-3 series

2.4 Upper Attachment – Mounting Plates

.1 Surface mounting plates to underside of concrete decks:

.1 for installation post concrete pour with either concrete inserts or drilled anchors,

.2 surface mount carbon steel plate, with either clevis hanger with pin (for use with hanging rod-eye) or for attachment of hanger rod and load nut,

.3 mounting holes in four corners of plate, sized for fastening bolts to achieve rated capacity,

.4 minimum load rating in tension based on connected rod size:

Rod Nominal Size	Tension Load kN (lbf)	Single Pipe Size Limit NPS
Ø3/8	3.25 (730)	2
Ø1/2	6.0 (1350)	3
Ø5/8	9.6 (2160)	4
Ø3/4	14.4 (3230)	8
Ø7/8	19.9 (4480)	12
Ø1	26.2 (5900)	18
Ø1-1/4	42.3 (9500)	20
Ø1-1/2	61.4 (13,800)	30

Standard of Acceptance

- Anvil - fig. 49 clevis plate,
- Anvil - fig. 52 load nut,
- Taylor - fig. 166 clevis plate,
- Taylor - fig. 167 load nut

2.5 Upper Attachments – Steel Structure

.1 Steel beam clamp (bottom flange), pipe size NPS 8 and smaller:

.1 hanger clamp attachment to beam or joist bottom flange, applying conentric loading to the beam/joist web,

.2 for hanger rod sizes Ø3/8 to Ø7/8 in.,

.3 malleable iron or carbon steel, symmetrically loading beam clamp to MSS SP-58, type 30,

.4 listed to CAN/UL 203 for fire protection piping,

.5 minimum load rating in tension: 6.1 kN (1365 lbf)

.6 with extension piece swivel attachment to receive hanger rod.

Standard of Acceptance

- Anvil - fig. 218 with fig. 157 extension swivel.
- Taylor - fig. 410 with fig. 411 extension swivel.

.2 Steel beam clamp (bottom flange), pipe size NPS 2½ to 24:

.1 hanger clamp attachment to beam or joist bottom flange, applying concentric loading to the beam/joist web,

.2 for hanger rod sizes Ø5/8 to Ø1-1/2 in.,

.3 forged steel, symmetrically loading heavy duty beam clamp, to MSS SP-58, type 28 or 29.

.4 load rating based on standard hanger rod load capacities in accordance with MSS SP-58,

.5 with weldless eye nut.

- Anvil - fig. 228
- Taylor - fig. 450

.3 Steel beam (top flange) - for conduit, piping NPS 6 and smaller, and ductwork:

.1 hanger clamp attachment to the top flange of beam or joist, applying an eccentric loading to the beam/joist,

.2 carbon steel, hook rod with locking jaw, fasteners and lock washers, to MSS SP-58, type 25,

.3 for hanger rod sizes Ø3/8 to Ø3/4 in.,

.4 minimum load rating in tension:

Rod Nominal Size	Tension Load kN (lbf)	Single Pipe Size Limit NPS
Ø3/8	3.2 (730)	2
Ø1/2 to Ø3/4	4.2 (940)	6

.5 listed to CAN/UL 203 for fire protection piping (rod size Ø3/8 and Ø1/2 in.)

Standard of Acceptance

- Anvil - fig. 227

.4 Steel joists (joist bottom chord) – for piping NPS 2 and smaller:

.1 steel washer plates for installation of support rod within the interstice space of double-channel steel joists and open-web steel joints, installed on top and bottom surface of the joist and secured with load nut (top washer plate) and locking nut (bottom washer plate).

.2 load rating based on standard hanger rod load capacities in accordance with MSS SP-58,

.3 carbon steel washer plates with locking nuts,

Standard of Acceptance

- Anvil - fig. 60
- Taylor - fig. 80

2.6 Upper Attachments – Wall Brackets

.1 Medium and heavy-duty wall mounting brackets:

.1 welded carbon steel plate or channel assembly, designed to allow at least 75 mm (3 in.) of horizontal adjustment of hanger rod position, to MSS SP-58, Types 32 and 33,

.2 carbon steel backplates for through bolting of concrete walls where required by supported load and wall material,

.3 for bolting into concrete wall, concrete block, or welding to building structure (where permitted by structural engineer),

.4 minimum load rating:

(a) medium duty: 6.7 kN (1500 lbs).

(b) heavy duty: 13.4 kN (3000 lbs).

Standard of Acceptance

- Anvil - fig. 195 and 199
- Taylor - fig. 801 and 802.

.2 Light-duty wall mounting brackets:

.1 welded carbon steel plate or channel assembly, single point rod support, to MSS SP-58, Types 31,

.2 with carbon steel backplates for through bolting of concrete walls where required by supported load,

.3 FM approved,

.4 for bolting into concrete wall, concrete block, or welding to building structure,

.5 minimum load rating: 3.35 kN (750 lbs).

Standard of Acceptance

- Anvil - fig. 194

2.7 Upper Attachment - Swivels

.1 Clevis swivel:

.1 to allow rotation movement of suspended clevis hangers,

.2 forged steel clevis with hanger pin, threaded rod socket, to MSS SP-58 type 14,

.3 tension load capacity not less than the connected rod load capacity,

.4 threaded end connected to concrete insert, with clevis end connected to weldless eye nut or welded eye rod.

Standard of Acceptance

- Anvil - fig. 299
- Taylor - fig. 63

.2 Weldless eye nut swivel:

.1 to allow rotation movement of suspended clevis hangers,

.2 forged steel eye nut, threaded rod socket, to MSS SP-58 type 17,

.3 tension load capacity not less than the connected rod load capacity.

.4 for connection to top of rod hanger, suspended from a clevis.

Standard of Acceptance

- Anvil - fig. 290
- Taylor – fig. 64

2.8 Hanger Rod

.1 Continuous threaded rod:

.1 carbon steel, USS course thread,

.2 tension load ratings to meet or exceed MSS SP-58.

Standard of Acceptance

- Anvil - fig. 146

- Taylor – fig. 54

.2 Welded eye rod:

.1 carbon steel, USS course thread,

.2 tension load ratings to MSS SP-58,

.3 tension load ratings to meet or exceed MSS SP-58 for hanger rod.

Standard of Acceptance

- Anvil - fig. 278
- Taylor - fig. 53

.3 Rod connectors:

.1 carbon steel, USS course thread,

.2 with mid-point site hole,

.3 tension load ratings to meet or exceed MSS SP-58.

Standard of Acceptance

- Anvil - fig. 135i
- Taylor - fig. 62S

2.9 Horizontal Pipe Support - Clevis

.1 Clevis support:

.1 applicable piping materials:

(a) carbon steel and stainless steel pipe, schedule 10 to 80,

(b) cast iron DWV piping,

.2 carbon steel, adjustable clevis, with clevis bolt reinforcing tube, to MSS SP-58 Type 1,

.3 adjustable hanger height while under load,

.4 listed to CAN/UL 203 for fire protection piping,

.5 applicable pipe size:

(a) steel pipe: NPS ½ to NPS 16

(b) ductile or cast iron drainage pipe: NPS 3 to 24

Standard of Acceptance

- Anvil - fig. 260
- Anvil - fig. 590 (for ductile or cast iron drainage pipe)
- Taylor – fig. 24
- Taylor – fig. 27AC (for ductile or cast iron pipe)

.2 Clevis support with extended yoke for where yoke is located inside of pipe insulation:

.1 applicable piping materials:

(a) carbon steel and stainless steel pipe, schedule 10 to 80,

(b) cast iron DWV piping,

.2 carbon steel, adjustable clevis, with clevis bolt reinforcing tube, to MSS SP-58 Type 1,

.3 adjustable hanger height while under load,

.4 yoke sized for outside dimension of pipe only, with extended yoke to clear pipe insulation,

.5 applicable pipe size:

(a) steel pipe: NPS ¾ to NPS 12

Standard of Acceptance

° Anvil - fig. 300
° Taylor – fig. 24L

.3 Clevis support with integral non-metallic insulation saddle:

.1 alternate to using standard clevis hanger specified above with separate high density insulation inserts or pipe insulation saddles,

.2 applicable piping materials:

(a) insulated carbon steel and stainless steel pipe, schedule 10 to 80,

(b) insulated cast iron drainage piping.

.3 carbon steel, adjustable clevis, with clevis bolt reinforcing tube, to MSS SP-58 Type 1,

.4 adjustable hanger height while under load,

.5 listed to CAN/UL 203 for fire protection piping,

.6 with glass-reinforced polypropylene saddle, sized to allow up to 50 mm (2 in.) insulation thickness,

.7 yoke and clevis sized for outside dimension of pipe and insulation,

.8 applicable pipe size:

(a) steel pipe: NPS ½ to NPS 8,

(b) copper tube: NPS ½ to NPS 8.

.9 piping system design temperature limits: 4.4 to 100°C (40 to 212°F).

Standard of Acceptance

° Anvil - fig. 260 ISS

.4 Clevis support for copper pipe and tube:

.1 for copper tube, NPS ½ to 4,

.2 zinc-plated carbon steel yoke and clevis, adjustable clevis to MSS SP-58, type 1, copper plated or felt lined finish,

.3 applicable tube size: NPS ½ to NPS 4,

.4 sized for outside dimension of pipe/tube, or outside diameter of pipe and insulation as applicable.

Standard of Acceptance

° Anvil - fig. CT-65 or 260F
° Taylor – fig. 52

2.10 Horizontal Pipe Support – Clevis for Fire Protection

.1 Pipe size range: NPS 2 to NPS 8.

.2 Light-duty, side-opening clevis support:

.1 for fire protection service only,

.2 pipe size range: NPS 2 to 8,

.3 galvanized carbon steel, adjustable clevis with fixed yoke,

.4 listed to ULC/ORD-C203 or UL 203 for fire protection piping,

.5 sized for outside dimension of pipe (and insulation if applicable).

.6 sized for outside dimension of pipe (and insulation where applicable),

.7 nominal pipe size: NPS 2 to NPS 8.

Standard of Acceptance

° Hilti - fig. MH-SLC Speed Lock

2.11 Horizontal Pipe Support – Swivel Ring Hanger

.1 For non-insulated drain-waste-vent piping, gas piping, and chemical piping.

.2 Pipe swivel ring hangers:

.1 carbon steel ring strap, zinc plated, adjustable knurled swivel nut, to MSS SP-58 Type 10,

.2 copper plated or epoxy-coated for use on copper tubing,

.3 listed to ULC/ORD-C203 or UL 203 for fire protection piping,

.4 nominal pipe size: NPS ½ to NPS 4.

Standard of Acceptance

° Anvil - fig. 69, CT-69
° Taylor – fig. 41, 43

2.12 Pipe Straps

.1 General:

.1 for non-insulated drain-waste-vent piping, gas piping, and chemical piping.

.2 pipe size: NPS 4 and smaller.

.2 Zinc plated carbon steel U-loop straps for mechanical fastening to structure.

Standard of Acceptance

° Anvil - fig. 262

.3 Hot-dipped galvanized carbon steel U-loop with clip-in or bolt-on attachment to modular channel supports.

Standard of Acceptance

° Unistrut

2.13 Horizontal Pipe Support – Pipe Roller (Type 41, 43, 44)

.1 Suspended support pipe roller – trapeze hanger style:

.1 adjustable height, pipe roller support for overhead support, to MSS SP-58 type 41,

.2 dual-hanger rod trapeze style,

.3 pipe size range: NPS ½ to NPS 16, with or without insulation.

Standard of Acceptance

- Anvil - fig. 171
- Taylor – fig. 95

.2 Suspended support pipe roller – clevis hanger style:

.1 adjustable height, pipe roller support for overhead support, to MSS SP-58 type 43,

.2 single rod clevis style,

.3 pipe size range: NPS ½ to NPS 8, with or without insulation.

Standard of Acceptance

- Anvil - fig. 181
- Taylor – fig. 93

.3 Bottom support pipe roller:

.1 adjustable height, pipe roller with bottom support rods, to MSS SP-58 type 41,

.2 for bottom support of piping,

.3 with mounting rods and upper/lower retention nuts at both ends,

.4 pipe size range: NPS ½ to NPS 16, with or without insulation.

Standard of Acceptance

- Anvil - fig. 177
- Taylor – fig. 95S

.4 Bottom support pipe roller with stand:

.1 pipe roller with cast iron support stand, to MSS SP-58 type 44,

.2 for bottom support of piping,

.3 fixed height and adjustable height variants,

.4 base drilled for fastening to supporting element,

.5 pipe size range: NPS ½ to NPS 18, with or without insulation.

Standard of Acceptance

- Anvil - fig. 271 (fixed), fig. 274 (adjustable)
- Taylor – fig. 279S (fixed), fig. 280S (adjustable)

2.14 Horizontal Pipe Support – Slides

.1 Structural slide bases – welded attachment:

.1 Tee or H shaped pipe support for welding to pipe, to allow axial and lateral movements,

.2 carbon steel, structural shape or fabricated, to ANSI/MSS SP-58 Type 35,

.3 operating temperature range: -28 to 200°C (-20 to 400°F),

.4 pipe insulation thickness clearance: up to 75 mm (3 in.),

.5 pipe size and load rating in accordance with the following table:

Slide Base Type	Vertical Support Load Rating	Lateral Restraint Load Rating	Uplift Restraint Load Rating	Pipe Size Range NPS

	kN (lbf)	kN (lbf)	kN (lbf)	Water	Steam, Gas
T	35.0 (8000)	9.0 (2000)	3.6 (800)	½ to 18	½ to 30
H	53.0 (12,000)	13.0 (3000)	5.3 (1200)	6 to 8	½ to 30
	53.0 (12,000)	18.8 (4000)	7.1 (1600)	10 to 20	
	107 (24,000)	26.0 (6000)	10.7 (2400)	24 to 30	

Standard of Acceptance

- Anvil - figs. 257A, 436A, 439A
- Taylor – figs. 257A

.2 Structural slide base assemblies with PTFE pads – welded attachment:

.1 for piping with design temperatures greater than 121°C (250°F), including steam at pressures greater than 103 kPa (15 psig),

(a) may also be used for lower temperatures,

.2 as specified above for slide bases and as follows,

.3 PTFE bonded to underside of slide,

.4 matching lower steel plates with bonded PTFE element (for fastening to structural support beam),

Standard of Acceptance

- Anvil - figs. 257, 436, 439
- Taylor – figs. 257

.3 Restraint variants for slides:

.1 lug restraints to limit lateral movement due to thermal expansion of between 6 mm to 25 mm (1/4 to 1 in.),

.2 where seismic restraint is required, lug restraints designed to limit lateral and vertical uplift movement to not more than 6 mm (1/4 in.),

(a) exception: if lateral movement of greater than 6 mm (1/4 in.) is shown, then the seismic design load is to be two (2) times the seismic load as shown in Specification section 20 05 49.

.4 Clamp for T and H slides supporting cold piping:

.1 galvanized steel clamp for insulated cold piping, sized for outside dimension of insulated pipe,

.2 rolled from structural plate steel with bolting flanges,

.3 continuous single clamp for length of slide, or two (2) individual clamps at each end of the slide,

.4 bottom half of clamp welded to T or H slides,

.5 top half of clamp mechanically fastened to bottom half.

Standard of Acceptance

- Anvil - fig. 212 (2 clamp) 432 (continuous clamp)

2.15 Horizontal Pipe Support – Trapeze

.1 Manufactured trapeze support:

.1 load ratings as per manufacturers data sheets,

.2 carbon steel, double-C channel (strong-backs), HSS shape and equal-leg angles.

Standard of Acceptance

- Anvil - fig. 45, 46, and 50
- Taylor – fig. 170

.2 Fabricated trapeze support:

.1 custom designed trapeze hangers of either hollow structural sections, double C channels (strongbacks), single C channel or unequal lengths angle channels, to support one or more pipes, conduits or ducts,

.2 design of custom trapeze supports to conform to the requirements of MSS SP-58,

.3 designed and sealed by a professional engineer licensed in the jurisdiction of the work.

.4 design criteria:

(a) static design load: deadweight of supported services plus 1.5 kN (250 lbf) point load at the mid-span,

(b) dynamic loads: include for seismic loads where system is subject to seismic restraint, and for wind and snow loads where located outdoors, superimposed on static design load,

(c) maximum trapeze deflection at any point: 1/250 (0.4%) of trapeze span,

(d) design load for carbon steel materials: not to exceed 28% of minimum tensile strength nor exceed 50% of minimum yield strength in tension/compression and bending,

(e) design load for stainless steel and low alloy steel materials: not to exceed 20% of minimum tensile strength and 45% of minimum yield strength in tension/compression and bending.

.5 for concurrent tension/compression loads and bending loads, the sum of the ratio of the stresses to allowable stress shall not exceed 1.0.

$$\frac{Stress\ in\ Tension\ or\ Compression}{Allowable\ Tension\ or\ Compression\ Stress} + \frac{Stress\ in\ Bending}{Allowable\ Bending\ Stress} \leq 1.0$$

.3 Hanger rods:

.1 minimum of two support rods per trapeze,

.2 rod size selected not to exceed 80% of the allowable maximum rod tensile load rating in accordance with MSS SP-58,

.4 Pipe restraint:

.1 restrain pipes from lateral movement with:

(a) bolt-on angle brackets or pipe U-bolts for manufactured hangers, or

(b) welded-on angles for fabricated hangers,

.2 restraints to permit axial linear movement and axial-rotation, except where otherwise shown to be an anchor.

2.16 Horizontal Pipe Support – Drainage MJ

.1 For support of horizontal cast iron drainage piping, as an alternative to clevis hangers.

.2 Designed to support each end of the pipe on both sides of a drainage MJ joint, and at intermediate supports, elbows and tees.

.3 Carbon steel, plain finish.

.4 Pipe size: NPS 2 to NPS 6

Standard of Acceptance

- Anvil - fig. 250
- Taylor – fig. 25

2.17 Vertical Pipe Stanchions

.1 Pipe support stanchion, with welded attachment:

.1 fixed height, or telescoping two-piece design with height adjustment, field-welded to pipe elbow or horizontal pipe,

.2 carbon steel, structural cylinder shape,

.3 designed for static loads of pipe and contents, as well as dynamic loads and anchor loads as shown,

.4 nominal pipe size: NPS 2 to NPS 18.

Standard of Acceptance

- Anvil - fig. 62

2.18 Vertical Pipe Riser Clamps

.1 Steel pipe, cast iron pipe:

.1 carbon steel clamps for carbon steel piping and cast iron piping,

.2 stainless steel clamps for stainless steel piping,

.3 listed to ULC/ORD-C203 or UL 203 for fire protection piping,

.4 supplied with field-welded pipe support lugs of same material as supported steel pipe (not including cast iron pipe).

.5 floor supported pipe riser clamps, to ANSI/MSS SP-58, type 8,

Standard of Acceptance

- Anvil - fig. 261
- Taylor – fig. 82

.6 suspended pipe riser clamps, 4 or 6 bolt patterns, to ANSI/MSS SP-58, type 42,

Standard of Acceptance

- Anvil - fig. 40, 40SS
- Taylor – fig. 82HCopper pipe and tube:

.7 floor supported pipe riser clamps, carbon steel with copper plated finish, to ANSI/MSS SP-58, type 8,

Standard of Acceptance

- Anvil - fig. CT-121
- Taylor – fig. 85

2.19 Vibration Isolation Supports

.1 Refer to specification section 20 05 48.

2.20 Cast Iron Pipe Joint Restraint

.1 Joint restraint rodding assembly for cast iron and asbestos cement drain waste and vent pipe, for each branch, tee, wye and clean-out fittings on drainage piping NPS 5 and over.

.2 Clamp and rod joint restraint:

.1 carbon steel pipe clamps with four bolt fasteners and rod washers, plain finish, to MSS SP-58, Type 8,

.2 carbon steel threaded rods and load nuts,

.3 two pipe clamps and two restraint rods required for each joint.

Standard of Acceptance

- Taylor – fig. 35

2.21 Insulation Shields

.1 Insulation shields:

.1 galvanized steel protection shield, thickness and length as applicable to pipe size, to MSS SP-58 type 40

.2 designed to meet MSS SP-58 maximum support spans with insulation inserts having a compressive strength of 620 kPa (90 psi).

.3 pipe size: NPS ½ to 24,

.4 insulation thickness: 12 mm to 50 mm (1/2 in. to 2 in.).

.5 gauge: minimum 18 ga.

.6 sleeve width: minimum 180 degree arc of insulation exterior surface

.7 minimum sleeve length:

(a) pipe NPS ½ to 4: 300 mm (12 in.)

(b) pipe NPS 6: 450 mm (18 in.)

(c) pipe NPS 8 to 24: 600 mm (24 in).

Standard of Acceptance

- Anvil - fig. 167 (up to NPS 24)
- Anvil - fig. 168 (up to NPS 8)
- Taylor – fig. 69H

.8 sleeve length exemption: sleeve lengths may be reduced where shield is supplied as an integrated part of a high density insulation insert system. – refer to Specification section 20 07 19.

.2 Heavy-duty insulation shield:

.1 for piping NPS 18 and larger installed on roller hangers and trapeze hangers,

.2 insulation shield as specified above plus a heavy duty support plate as follows,

.3 support plate fabrication: 6 mm (1/4 in.) thick ASTM A36 galvanized steel rolled plate, inside diameter to fit outer radius of insulation shield,

.4 size:

(a) width: minimum 120 degrees arc of mating insulation shield,

(b) length: not more than 100 mm (4 in.) shorter than the primary shield.

.5 Support plate tack welded to the insulation shield.

2.22 Insulation Pipe Saddles

.1 Carbon steel or stainless steel (to match pipe material) saddle welded to pipe with insulation inserted between saddle and pipe, to MSS SP-58 type 39.

.2 For pipe sizes NPS ¾ to 36.

.3 Insulation thickness range: 25 to 140 mm (1 to 5.5 in.)

Standard of Acceptance

- Anvil - fig. 160 to 166
- Taylor – fig. 70 to 77

3 EXECUTION

3.1 General

.1 Where the specific requirements for pipe supports are specified in other sections of Division 20 to 23, the requirements of those sections take precedence over the requirements of this specification section.

3.2 Coordination with Concrete Work

.1 Supply, deliver and install concrete inserts in ample time to be built into the work of Division 03.

.2 Correctly position and set concrete inserts onto concrete formwork for pipes and equipment hangers. Secure inserts firmly to formwork before concrete is poured.

.3 Do not use explosive drive pins in any section of the Work without obtaining prior approval from the Consultant.

3.3 Support and Hanger Installation – General Requirements

.1 Support piping directly on or from structural building elements. Do not support pipe directly from other services. Multiple piping services may be supported on a common trapeze support.

.2 Provide all miscellaneous materials including nuts, washers, and backing plates to make a complete installation.

.3 Where wall brackets are used, select brackets and size mounting bolts and backing plates to suit the supported load, allowing for a safety factor by not loading the bracket more than 80% of its published load rating.

.4 Do not support piping or tubing in direct contact with hangers or supports of dissimilar metallic material. Select hangers to include an electrical insulating material between the hanger and the pipe, or provide electrical insulating material.

.5 Coordinate location of pipe supports with pipe flexible connectors, pipe guides and pipe anchors provided under specification section 20 05 16.

.6 In steel framed construction, support piping from structural members. Where structural members are not suitably located for upper hanger attachment locations, and where inserts of adequate capacity cannot be installed in concrete slabs, provide supplementary steel framing members;

.1 fabricate supplementary steel from standard HSS sections, single EL section, double C “strongback” sections, or pipe lengths,

.2 size supporting steel to limit horizontal span deflection to 1/250 (0.4%) between connecting points to the structure,

.3 mechanically fasten supplementary steel to structural steel to prevent axial and transverse displacement, and rotation.

.7 It is permissible to offset hangers and displace the hanging rod so that in the final operating position, the hanging rods are within 4° of vertical.

.8 Provide a pipe support within 300 mm (12 in.) of;

.1 an elbow or tee,

.2 a concentrated load, including but not limited to valves, strainers and flanges,

.3 a connection to equipment.

.9 Where hanger rods are used, provide load nuts on top and load nuts on the underside of attachment to the pipe support, including clevis hangers, roll supports, roll yoke hangers, and trapeze hangers.

3.4 Horizontal Pipe Support Spacing and Hanger Rod Size

.1 Provide horizontal pipe supports at the spacing as detailed in the Schedule “A” included at the end of this Specification section, unless specified otherwise in other sections of Division 20 to 23.

.1 Schedule “A” includes alternate hanger rod size and support spans for reduced rod sizes.

.2 Use threaded rod of the size based on pipe type and horizontal pipe hanger spacing as stated in the Schedule “A” for single rod hangers. Where the pipe hanger type requires two rods, the rod size may be reduced by one trade size but shall not be less than Ø3/8 in.

.3 For piping using flexible roll-groove joints, there shall be not less than one hanger between pairs of joints.

.4 Support plastic and other special piping, including anchors and guides, in accordance with the pipe manufacturer's requirements.

3.5 Horizontal Pipe Hanger and Support Selection

.1 Select horizontal pipe hanger and support type based on pipe size and fluid service temperature in accordance with Schedules “B(1)” and “B(2)” at the end of this section.

.2 For fire protection piping;

.1 use clevis hangers for all pipe sizes,

.2 swivel ring pipe hangers may be used for fire protection piping NPS 4 and smaller.

.3 Swivel ring pipe hangers may only be used for;

.1 drain waste and vent (DWV) piping and tubing, NPS 4 and smaller,

.2 medical gas piping and laboratory gas piping, NPS 4 and smaller,

.3 compressed air piping and tubing located downstream of a refrigerated dryer, NPS 2 and smaller,

.4 chemical treatment piping NPS 2 and smaller.

.4 For cast iron drainage and vent piping;

.1 use clevis hangers for suspended supports,

.2 drainage MJ type hangers may be used on hub-less cast iron piping,

.3 use roller or slide type supports for bottom supported piping. For slide supports, use a variant incorporating pipe band clamps in lieu of welded attachment.

.5 For other piping, select pipe support types in accordance with Schedule B at the end of this section.

.6 For pipe size NPS 16 to 24, a clevis hanger may be used to support a concentrated load, provided it is used only to locally support the concentrated load and there is a separate pipe run support within one-third of the maximum allowable span on each side of the concentrated load.

.7 The use of a half-section of a suspended pipe clamp to support a horizontal pipe using two threaded rods is prohibited unless the manufacturer has written installation instructions permitting such use. The use of a pipe riser clamp for this purpose is prohibited.

3.6 Clevis Hangers

.1 Where clevis hangers are used for cold piping, select clevis to fit the outside dimension of pipe and associated insulation.

.2 Where clevis hangers are used for heating piping;

.1 select clevis to fit the pipe diameter only (clevis located inside of insulation) for small diameter piping in accordance with Schedule “C” at the end of this section,

.2 for larger diameter piping, select clevis to fit the outside dimensions of pipe and insulation – refer to Schedule “C” at the end of this section,

.3 where the distance from the building support element to the clevis pin is less than the value shown in the standard details at the end of this section, use an alternative method of support;

(a) exception: where the pipe is installed tight to the structure, the exposed length between the structural attachment and the top of the clevis shall not exceed 25 mm (1 in.).

.3 Where clevis hangers are used for stainless steel pipe or tube and for copper tube;

.1 use copper or epoxy finished carbon steel clevis hangers for copper pipe/tube,

.2 use stainless steel or alloyed steel clevis hangers (for stainless steel pipe/tube), or

.3 use a standard clevis hanger with integral non-metallic insulation saddles, and select hanger size for outside of the pipe and insulation.

.4 Adjust clevis hangers to provide the required drainage slope and direction for each pipe.

.5 Where the project requires seismic bracing of piping systems, add a Schedule 40 pipe over the clevis bolt, sized to provides at least 6 mm (1/4 in.) inside diameter clearance to the clevis bolt. This applies only where a transverse or longitudinal brace is attached to the clevis hanger.

3.7 Roll Hangers and Supports

.1 For roll hangers, provide load and lock nuts to allow final adjustment of roll hanger to allow pipe drainage.

.2 For roll supports supported above the structure element, the length of exposed threaded pipe between the roll support and the structural element shall not exceed 10 times the outside diameter of the rod.

3.8 Trapeze Hangers

.1 Provide U-bolts or fabricated angles to restrict lateral pipe movement, while allowing pipe thermal axial motion and rotation;

.1 fasten U-bolts or angles to the trapeze hanger with top and bottom nuts,

.2 fabricated retention angles to extend vertically at least one-quarter the outside pipe/insulation diameter, and mechanically fasten to the trapeze,

.3 where seismic restraint is required, only use U-bolts.

.2 Adjust trapeze hangers to provide the required drainage slope and direction for each pipe. If the trapeze serves multiple pipes having different drainage slopes or directions, provide shims under each pipe as necessary to provide required slope. Mechanically fasten ot tack-weld the shim plates to the trapeze.

3.9 Slide Supports

.1 For hot piping, weld the T or H slide directly to the pipe.

.2 For cold piping, weld the T or H slide to the bottom half of a carbon steel clamp assembly.

.3 Use slides with integral lateral movement limit lugs at pipe supports required to function as a guide. Movement clearance to be between 6 mm and 25 mm (1/4 to 1 in.).

.4 Where seismic restraint is required, use slides with integral lateral and vertical-up movement limit lugs so that the maximum allowable movement does not exceed 6 mm (1/4 in.).

.5 For fluid service temperatures of 121°C (250°F) and less, apply grease with a service temperature of not less than 200°C (392°F) over the entire bottom of the T or H slide.

.6 For fluid service temperatures greater than 121°C (250°F) use a PTFE slide pad bonded to the underside of the slide and a matching PTFE slide pad bonded to the top of the structural steel support.

3.10 Vertical Pipe Supports

.1 Pipe riser clamps:

.1 provide pipe riser clamps for non-insulated pipes NPS 4 and smaller at every second floor level for vertical pipe risers passing through two or more floors, unless other vertical pipe support types are shown,

.2 for steel pipe, provide support lugs welded to steel piping so that pipe lugs bear on the top-surface of the riser clamp,

.3 for copper tube and pipe, arrange vertical piping so that a pipe joint bears on the top-surface of the riser clamp.

.2 Fabricated pipe riser supports:

.1 support piping NPS 6 and larger, using fabricated riser support brackets complete with reinforcing gusset plates welded or clamped to piping, designed not to exceed the maximum allowable local pipe stress at a load of not less than 200% of the supported load of:

(a) for the lowest support point of the riser, the supported pipe plus insulation weight for the lowest support interval plus the total water weight of the entire riser.

(b) except at the lowest support point of the riser, the pipe plus insulation weight for each support interval (except at the bottom of the riser).

.3 Support vertical cold piping and hot piping for riser heights that are 25 m (82 ft) or less in height as follows:

.1 provide spring vibration isolators in accordance with specification section 20 05 48, attached to pipe riser supports at intervals of every 2nd storey or 10 m (32 ft), whichever is less,

.2 provide a pipe anchor at the base of the riser or the mid-height of the riser.

.4 Support vertical cold piping and hot piping for riser heights that are greater than 25 m (82 ft) but do not exceed 50 m (165 ft) in height as follows:

.1 provide a custom engineered support system utilizing variable spring isolators,

.2 provide pipe anchors at the mid-point of the riser, and

.3 provide at least one spring support per riser section above and below the anchor point.

.5 Support vertical cold piping and hot piping for riser heights greater than 50 m (165 ft) as follows:

.1 provide a custom engineered support system utilizing constant load supports for each pipe section located between expansion joints,

.2 variable spring supports may be used at intermediate locations between main constant load supports,

.3 provide pipe anchor supports at the base of the riser, and at intermediate locations along riser length at locations as shown,

.4 provide in-line expansion joints between each pair of pipe anchors on the same riser in accordance with Specification section 20 05 16,

.5 design pipe anchors to withstand pressure thrust created by the expansion joints, unless pressure -balanced expansion joints are used,

.6 Design riser anchors to support the deadweight of the riser pipe, fluid contents and insulation. Where seismic restraint is required, the anchors may also be designed to resist the seismic horizontal and vertical loads.

.7 Where custom engineering riser supports are required, they are to be designed to meet the following criteria:

.1 the maximum vertical movement of a horizontal branch pipe is not to exceed 20 mm (0.75 in) from its installation temperature to its in-service temperature,

.2 the maximum vertical movement of the horizontal mains pipe at the base or top of the riser is not to exceed 40 mm (1.5 in.) from its installation temperature to its in-service temperature, provided that the horizontal piping adjacent to the riser are also supported on variable spring supports for the first three horizontal support points.

3.11 Pipe Saddles and Shields

.1 Provide pipe saddles and shields for insulated piping in accordance with Schedule “C” at the end of this section.

.2 Provide pipe shields for uninsulated glass and plastic piping NPS 1-1/2 and larger.

.3 Where piping is insulated and requires pipe shields, install the shields between pipe insulation and pipe support. Provide high-density insulation insert between pipe and insulation shields of the designation type as shown in Schedule “C” and as specified in accordance with specification section 20 07 19.

.4 Where piping is not insulated and requires a pipe shield, install the shields between the pipe and the pipe support.

.5 Where clevis hangers with integral insulation saddles are used, apply insulation sealant to the polypropylene saddle in accordance with the pipe hanger manufacturer’s instructions;

.1 for hot piping, coordinate with the pipe insulation contractor to apply sealant coating to the integral saddle at the time pipe insulation is installed,

.2 for cold piping, seal the saddle’s pipe contact surfaces with vapour-barrier sealant before the piping is installed. Finish sealing the remainder of the saddles’ exposed faces when pipe insulation is installed.

3.12 Rooftop Supports

.1 For manufacturer rooftop pipe supports, conform to Specification section 20 05 06.

3.13 Vibration Isolation Supports

.1 Provide vibration isolators at pipe supports for horizontal piping in accordance with specification section 23 05 48.

.2 Provide vibration isolators at vertical pipe (riser) supports in accordance with specification section 20 05 48.

.3 When installed with clevis hangers, install the vibration isolators below the top surface of the clevis; do not attached the vibration isolator to the structural element.

3.14 Variable Load Supports

.1 Provide variable load supports on piping connections NPS 10 or larger at motorized equipment as follows:

.1 locate the support as close as possible to the equipment connection, and beyond any flexible connector (where required),

.2 select the support to have a static displacement to be equal to the static displacement of the equipment vibration isolator, but not less than 20 mm (0.75 in),

.3 set the support load so that the total pipe weight imposed on the equipment connection does not exceed the maximum allowable load as defined by the equipment manufacturer.

.2 Provide variable load supports for vertical pipe supports as shown.

.3 Provide variable load supports in mechanical rooms where piping transitions from horizontal to vertical where it enters a vertical service shaft. Provide vibration isolation hangers for other locations in accordance with Section 20 05 48 Vibration Isolation.

3.15 Temporary Supports for Steam Piping

.1 Where steam piping support spacing is in accordance with Schedule A for steam and gas piping, provide temporary intermediate supports for hydrostatic pressure testing so that the support spans do not exceed the values in Schedule A for water filled pipe.

3.16 Set-up After Installation

.1 Adjust hangers to equalize hanger loads, to support piping true to line and grade, and to minimize loads transferred through connections to equipment and outlets.

3.17 Schedules

.1 The following appended schedules form part of this Specification section.

.1	Schedule A1(a)	Horizonal Pipe Support Loads and Support Spans – Schedule 20 to 80 Pipe
.2	Schedule A1(b)	Alternate Hanging Rod Sizes and Support Spans for Schedule 20 to 80 Pipe
.3	Schedule A2(a)	Horizonal Pipe Support Loads and Spans – Schedule 10/10S Stainless Steel Pipe
.4	Schedule A2(b)	Alternate Hanging Rod Sizes and Support Spans for Schedule 10/10S Stainless-steel Pipe
.5	Schedule A3	Horizontal Pipe Support Loads and Spans – Copper and Stainless Steel Tube
.6	Schedule B	Pipe Support Type Selection Requirements
.7	Schedule C	Insulation Protection Requirements

3.18 Standard Details

.1 The following standard details are appended to the end of this Specification section.

.1	20 05 29-010	Cold Piping and Dual-Temperature Piping – Clevis Hanger Detail
.2	20 05 29-011	Cold Piping and Dual-Temperature Piping – Roll Hanger Detail
.3	20 05 29-012	Cold Piping and Dual-Temperature Piping – Trapeze Hanger Detail
.4	20 05 29-013	Cold Piping and Dual-Temperature Piping – Slide Support Detail

.5 20 05 29-020 Hot Piping – Clevis Hanger Detail

.6 20 05 29-021 Hot Piping ≤ 100°C, Small Size Piping – Clevis Hanger Details

.7 20 05 29-022 Hot Piping – Roll and Trapeze Hanger Detail

.8 20 05 29-023 Hot Piping – Slide Support Detail

.9 20 05 29-030 Slide Supports – Guides and Seismic Restraint

Schedule A1(a)

Horizontal Pipe Support Spacing
for
Carbon Steel, Galvanized Steel, Stainless-steel Piping
Schedule 20 to 80 Inclusive

Notes for Schedule A1(a) and A1(b):
[1] Hanging rod size for single support. Where two supports are used, the rod size may be reduced by one size but not less than Ø3/8 in..
[2] Subject to load capacity of hanger components other than the hanging rod.
[3] Where piping is hydrostatically tested with water, temporary pipe supports are required to limit pipe span to the "liquids" values.
[4] For trapeze hangers only.

Pipe Size NPS	Rod Diameter Single Support [Note 1] Inches	Maximum Support Spacing, Liquids [Note 2] m (ft)	Maximum Support Spacing Steam, Gases [Note 2, 3] m (ft)
½	Ø 3/8	1.8 (6)	1.8 (6)
¾ to 1¼	Ø 3/8	2.1 (7)	2.1 (7)
1½	Ø 3/8	2.7 (9)	2.7 (9)
2	Ø 3/8	3.0 (10)	4.0 (13)
2½	Ø ½	3.3 (11)	4.3 (14)
3	Ø ½	3.3 (12)	4.6 (15)
4	Ø 5/8	4.2 (14)	5.2 (17)
6	Ø ¾	5.1 (17)	6.4 (21)
8	Ø ¾	5.7 (19)	7.3 (24)
10	Ø 7/8	6.7 (22)	7.9 (26)
12	Ø 7/8	7.0 (23)	9.1 (30)
14	Ø 1	7.5 (25)	9.8 (32)
16	Ø 1	8.0 (27)	10.7 (35)
18	Ø 1 [Note 4]	8.4 (28)	11.3 (37)
20	Ø 1-1/4 [Note 4]	9.0 (30)	11.9 (39.0)
24	Ø 1-1/2 [Note 4]	9.6 (32)	12.8 (42.0)
30	Ø 1-1/2 [Note 4]	10.0 (33)	13.4 (44.0)

Schedule A1(b)

Alternate Rod Sizes and Pipe Spans
For Pips Sizes NPS 10 to 16
Carbon Steel, Galvanized Steel, Stainless-steel Piping
Schedule 20 to 80 Inclusive

The following table provides alternate combinations of rod hanger size and associated support spacing for select pipe sizes.

Pipe Size NPS	Rod Diameter Single Support [Note 1] Inches	Maximum Support Spacing, Liquids [Note 2] m (ft)	Maximum Support Spacing Steam, Gases [Note 2, 3] m (ft)
10	Ø 3/4	4.0 (13)	6.7 (22)
12	Ø 3/4	3.0 (10)	5.8 (19)
14	Ø 3/4	2.7 (9)	5.2 (17)
	Ø 7/8	5.8 (19)	9.1 (30)
16	Ø 3/4	2.1 (7)	4.6 (15)
	Ø 7/8	4.9 (16)	7.9 (26)

Schedule A2(a)

Horizontal Pipe Support Spacing
For
Stainless-steel Pipe
Schedule 10/10S

Notes for Schedule A2(a) and A2(b):
[1] Rod size for single support. Where two supports are used, the rod size may be reduced by one size but not less than Ø3/8 in..
[2] Subject to load capacity of hanger components other than the hanging rod.
[3] Where piping is hydrostatically tested with water, temporary pipe supports are required to limit pipe span to the "liquids" values.
[4] For trapeze hangers only.

Pipe Size NPS	Rod Diameter Single Support [Note 1]	Maximum Spacing, Liquids [Note 2] m (ft)	Maximum Spacing Steam, Gases [Note 2, 3] m (ft)
½	Ø 3/8	1.83 (6)	2.45 (8)
¾	Ø 3/8	2.1 (7)	2.75 (9)
1	Ø 3/8	2.45 (8)	2.75 (9)
1¼	Ø 3/8	2.75 (9)	2.75(9)
1½	Ø 3/8	2.75 (9)	3.65 (12)
2	Ø 3/8	3.10 (10)	4.0 (13)
2½	Ø 1/2	3.35 (11)	4.3 (14)
3	Ø 1/2	3.65 (12)	4.6 (15)
4	Ø 5/8	4.25 (14)	5.2 (17)
6	Ø 3/4	4.9 (16)	6.4 (21)
8	Ø 3/4	5.5 (18)	7.3 (24)
10	Ø 7/8	5.8 (19)	7.9 (26)
12	Ø 7/8	6.1 (20)	9.2 (30)
14	Ø 1	7.0 (23)	9.7 (32)
16	Ø 1	7.3 (24)	10.7 (35)
18	Ø 1 [Note 4]	7.3 (24)	11.3 (37)
20	Ø 1-1/4 [Note 4]	7.6 (25)	11.9 (39)
24	Ø 1-1/2 [Note 4]	7.3 (25)	11.9 (42)
30	Ø 1-1/2 [Note 4]	8.5 (28)	12.8 (44)

Schedule A2(b)

Alternate Rod Sizes and Pipe Spans
For Pips Sizes NPS 10 to 16
Stainless-steel Pipe
Schedule 10/10S

The following table provides alternate combinations of rod hanger size and associated support spacing for select pipe sizes.

Pipe Size NPS	Rod Diameter Single Support [Note 1] Inches	Maximum Spacing, Liquids [Note 2] m (ft)	Maximum Spacing Steam, Gases [Note 2, 3] m (ft)
10	Ø 3/4	4.9 (16)	4.9 (16)
12	Ø 3/4	3.7 (12)	3.7 (12)
14	Ø 3/4	2.7 (9)	2.7 (9)
	Ø 7/8	5.2 (17)	6.1 (20)
16	Ø 3/4	2.4 (8)	2.4 (8)
	Ø 7/8	4.3 (14)	5.2 (17)

Schedule A3

Horizontal Pipe Support Spacing
For
Copper Tube and Stainless-steel Tube

Notes for Schedule A3:
[1] Rod size for single support. Where two supports are used, the rod size may be reduced by one size but not less than M10 (3/8 in.).
[2] Subject to load capacity of hanger components other than the hanging rod.

Pipe Size NPS	Rod Diameter Single Support [Note 1] Inches	Maximum Spacing, Liquids and Gases [Note 2] m (ft)
½	Ø 3/8	1.5 m (5 ft)
3/4 to 1¼	Ø 3/8	1.8 m (6 ft)
1½	Ø 3/8	2.4 m (8 ft)
2	Ø 3/8	2.4 m (8 ft)
2½	Ø 1/2	3.0 m (10 ft)
3	Ø 1/2	3.0 m (10 ft)
4	Ø 5/8	3.0 m (10 ft)
6	Ø 3/4	4.3 (14)
8	Ø 3/4	4.9 (16)

Schedule B

Pipe Support Type Selection Requirements

The following tables B(1) and B(2) lists hanger types which are to be used based on pipe size and service temperature. Refer to Schedule C for additional requirements concerning insulation protection.

Pipe Support Type Legend	
CL	Clevis hanger
CL(EY)	Clevis hanger with extended yoke for installation under pipe insulation
CL(IS)	Clevis hanger with integral insulation saddle
CL(LD)	Clevis hanger, light duty
SW	Swivel hanger
RS	Roll support
RH	Roll hanger with clevis
RB	Roll support with integral base
TS	T slide
HS	H slide
TZ	Trapeze

Application Legend	
A	Acceptable
---	Not permitted

Table B(1):
Pipe Support Type Selection Requirements
For Fluid Service Temperatures up to 100°C (212°F) or Less

Pipe/Tube Size NPS	CL	CL (EY)	CL (IS)	CL (LD)	SW [Note 1]	RS	RH	RB	TS	HS	TZ
½ - ¾	A	A	A	A	A	---	---	---	---	---	A
1 - 4	A	A	A	A	A	A	A	A	A	---	A
6	A	A	A	---	---	A	A	A	A	A	A
8	A	A	A	---	---	---	A	A	A	A	A
10	A	A	---	---	---	---	A	A	A	A	A
12	A	A	---	---	---	---	A	A	A	A	A
14	A	---	---	---	---	---	A	A	A	A	A
16	A	---	---	---	---	---	---	A	A	A	A
18	---	---	---	---	---	---	---	A	A	A	A
20	---	---	---	---	---	---	---	---	A	A	A
24	---	---	---	---	---	---	---	---	---	A	A
30	---	---	---	---	---	---	---	---	---	A	A

Notes:
[1] For uninsulated ambient piping/tubing only.

Table B(2):

Pipe Support Type Selection Requirements
Fluid Service Temperatures greater than 100°C (212°F)
Including Steam at All Pressures

Pipe/Tube Size NPS	CL	CL (EY)	CL (IS)	CL (LD)	SW	RS	RH	RB	TS	HS	TZ
½ - ¾	A	---	---	A	---	---	---	---	---	---	A
1 - 4	A	---	---	A	---	A	A	A	A	---	A
6	A	---	---	---	---	A	A	A	A	A	A
8	A	---	---	---	---	---	A	A	A	A	A
10	---	---	---	---	---	---	A	A	A	A	A
12	---	---	---	---	---	---	A	A	A	A	A
14	---	---	---	---	---	---	A	A	A	A	A
16	---	---	---	---	---	---	---	A	A	A	A
18	---	---	---	---	---	---	---	A	A	A	A
20	---	---	---	---	---	---	---	---	A	A	A
24	---	---	---	---	---	---	---	---	---	A	A
30	---	---	---	---	---	---	---	---	---	A	A

Schedule C

Insulation Protection Requirements
For Pipe Hanger/Support

Notes for Schedule C:

[1] For the column Hanger Support Position, "Insulation" means hanger or support element is outside of the pipe and insulation. "Pipe" means hanger or support element is in direct contact with the pipe and is encased in the pipe insulation.

[2] "Pipe" position only applies to clevis hangers. For all other pipe supports, use the "Insulation" hanger/support position.

[3] Include heavy-duty support plate welded to shield.

[4] Restrictions apply to minimum length of hanger rod for heating piping at this temperature range. Refer to standard details.

[5] Refer to specification section 20 07 19 Piping Insulation for type P-21, P-22 and P-23 high-density insert specifications.

[6] Where ambient piping is required to be insulated under section 20 07 19, insulation is to be protected in accordance with the requirements for Low Temperature Piping.

[7] Insulation for Dual Temperature Piping is to be protected in accordance with the requirements for Cold Piping.

Application Legend for Insulation Saddle and Shields	
REQ	Required
ALT	Acceptable Alternate
	Not Applicable

Service Temperature °C (°F)	Pipe Size NPS	Hanger/ Support Position [Note 1, 2]	Pipe Saddle	Insulation Shield	
				Shield	High-Density Insert Type [Note 5]
Hot Piping > 121 to ≤ 205 (> 250 to ≤ 400) Including steam >103 kPa (15 psi)	≥ 6	Insulation	REQ		
	>1-1/4 and ≤ 4	Insulation	ALT		
				ALT	P-23
	≤ 1-1/4	Insulation		REQ	
Hot Piping > 100 to ≤ 121 (> 212 to ≤ 250) Including steam ≤ 103 kPa (15 psi)	≥ 6	Insulation	REQ		
	>1-1/4 and ≤ 4	Insulation	ALT		
				ALT	P-21, P-22, or P-23
	≤ 1-1/4	Insulation		REQ	

Schedule C (Con't)

Service Temperature °C (°F)	Pipe Size NPS	Hanger/ Support Position [Note 1, 2]	Pipe Saddle	Insulation Shield	High-Density Insert Type
Hot Piping 61 to 100 (141 to 212)	≥10 and ≤ 30	Insulation	REQ		
	≥ 6 and ≤ 16	Insulation	ALT		
				REQ	P-21, P-22, or P-23
	≥ 1-1/2 and ≤ 4	Insulation		ALT	P-21, P-22, or P-23
		Pipe [Note 4]	ALT		
	≤ 1-1/4	Insulation		ALT	
		Pipe [Note 4]	ALT		
Low Temperature Water 40 to 60 (104 to 140) [Note 6]	≥18 and ≤ 30	Insulation		REQ [Note 3]	P-21, P-22, or P-23
	≥ 6 and ≤ 16	Insulation		REQ	P-21, P-22, or P-23
	≥ 1-1/2 and ≤ 4	Insulation		ALT	P-21, P-22, or P-23
		Pipe	ALT		
	≤ 1-1/4	Insulation		ALT	
		Pipe	ALT		
Cold Piping 4 to 16 (39 to 61) [Note 7]	≥18 and ≤ 30	Insulation		REQ [Note 3]	P-21 or P-22
	≥ 1-1/2 and ≤ 16	Insulation		REQ	P-21 or P-22
	≤ 1-1/4	Insulation		REQ	
Fire protection piping	≥ 1-1/2	Pipe			
	≤ 1-1/4	Pipe			
MRI Quench Piping	All	Insulation		REQ	P-22

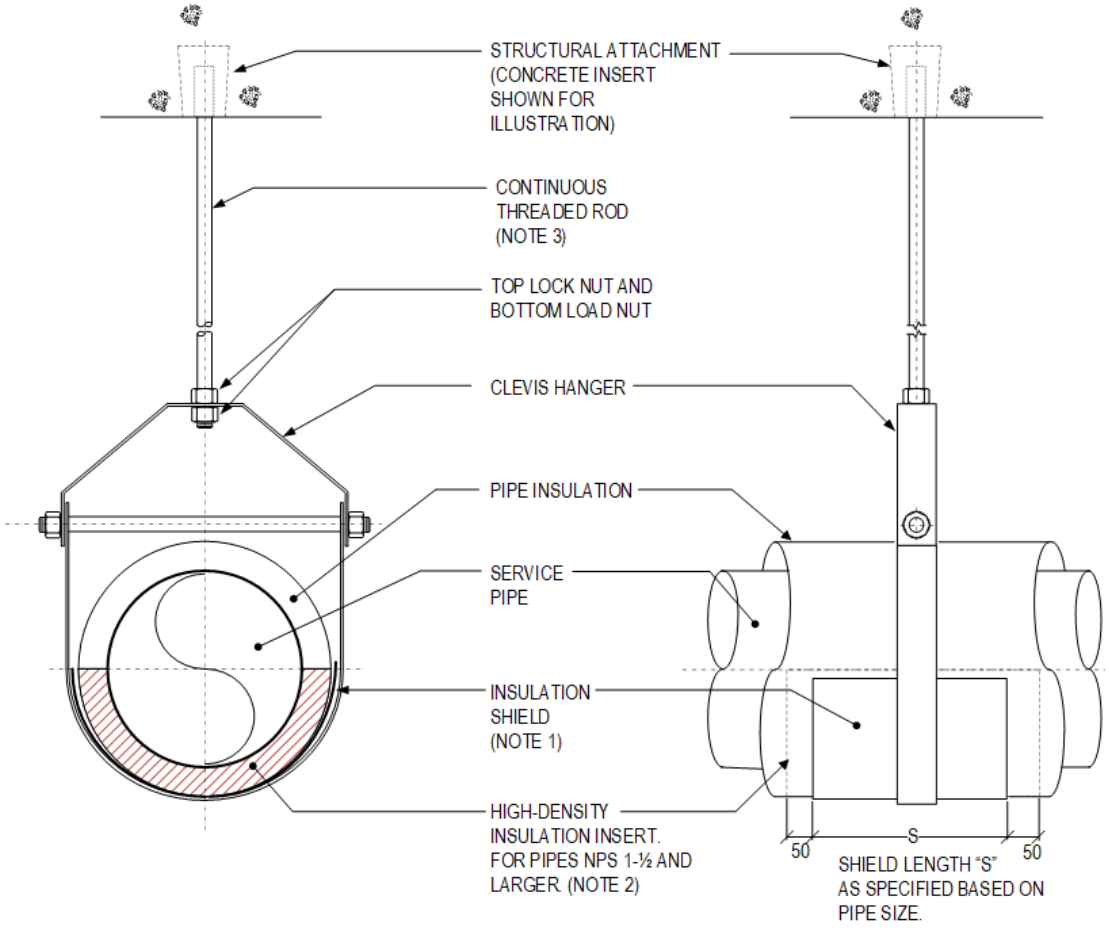

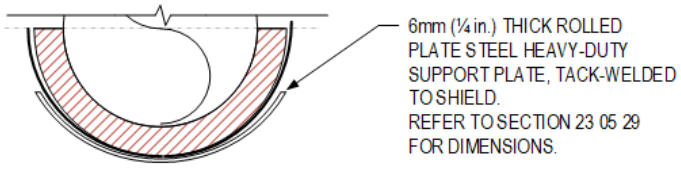

SUPPLEMENTARY DETAIL
PIPE SIZE NPS 18 TO 30

NOTES:

1. REFER TO SPECIFICATION SECTION 20 05 29 FOR TYPE AND SIZE OF INSULATION SHIELD.
2. REFER TO SPECIFICATION SECTION 20 05 29, SCHEDULE "C" AND SECTION 20 07 19 FOR APPLICABLE TYPES OF HIGH-DENSITY INSULATION INSERTS.
3. NO LIMITATION ON MINIMUM HANGER ROD LENGTH FOR COLD PIPE APPLICATIONS..

NOT TO SCALE

HHAngus	Sheet Title: COLD PIPING DUAL-TEMPERATURE PIPING CLEVIS HANGER DETAIL	Date: 11 MAY 2023	Rev. No.: 01	Checked: PS
		Standard Detail No. 20 05 29 - 010		

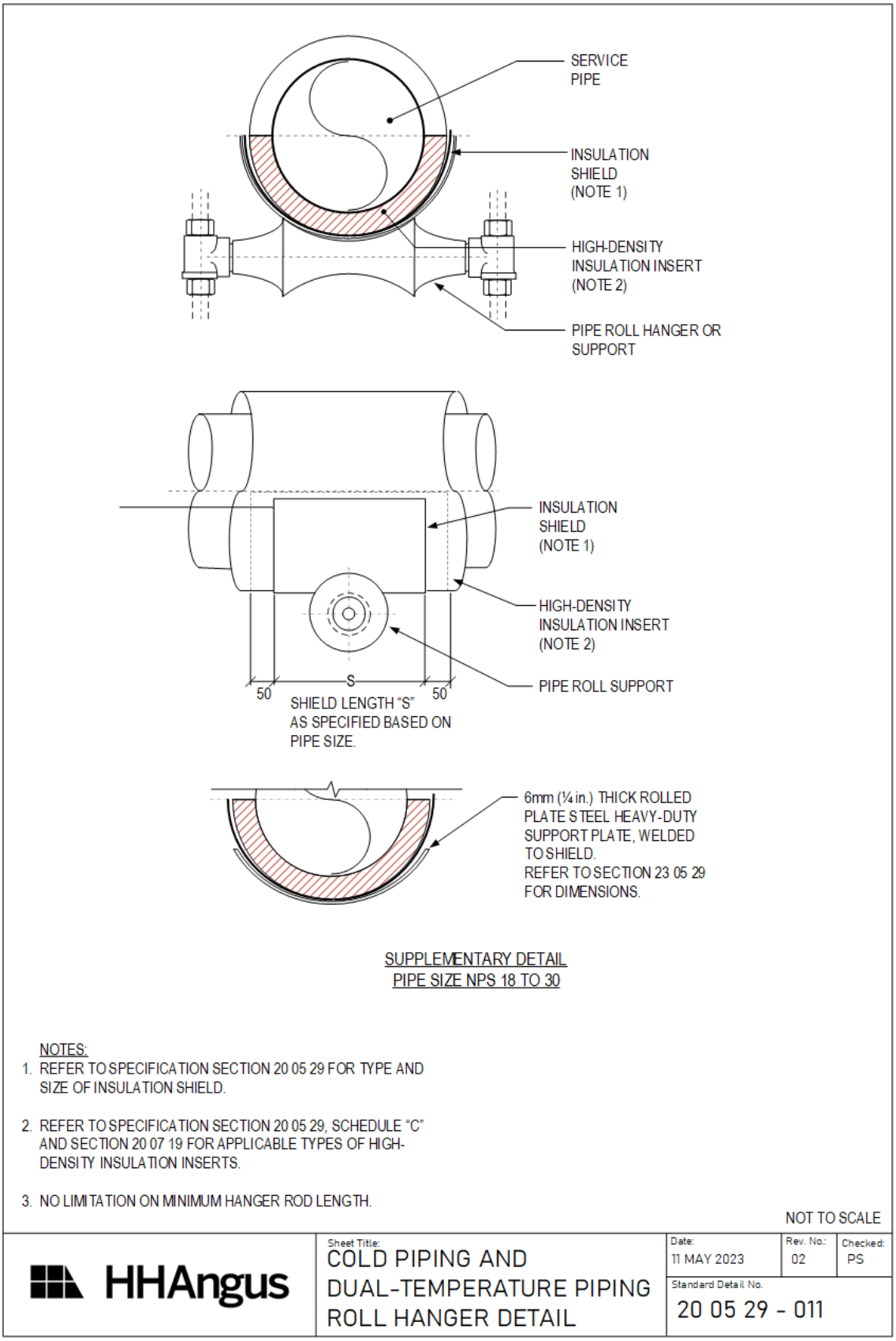

SUPPLEMENTARY DETAIL
PIPE SIZE NPS 18 TO 30

NOTES:
1. REFER TO SPECIFICATION SECTION 20 05 29 FOR TYPE AND SIZE OF INSULATION SHIELD.
2. REFER TO SPECIFICATION SECTION 20 05 29, SCHEDULE "C" AND SECTION 20 07 19 FOR APPLICABLE TYPES OF HIGH-DENSITY INSULATION INSERTS.
3. NO LIMITATION ON MINIMUM HANGER ROD LENGTH.

NOT TO SCALE

HHAngus	Sheet Title: COLD PIPING AND DUAL-TEMPERATURE PIPING ROLL HANGER DETAIL	Date: 11 MAY 2023	Rev. No.: 02	Checked: PS
		Standard Detail No.: 20 05 29 - 011		

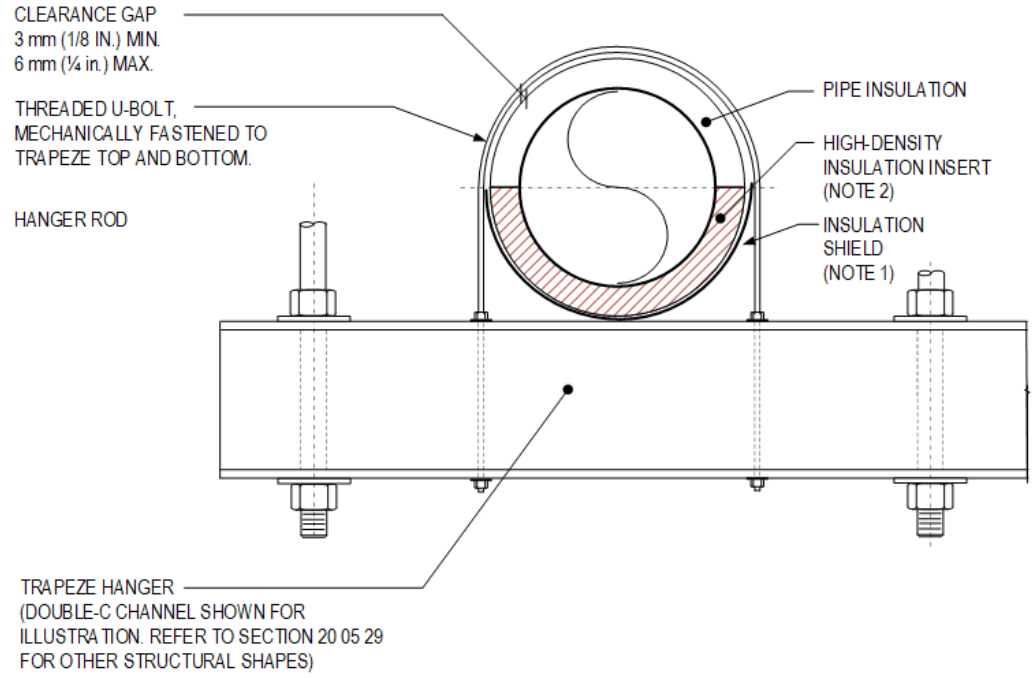

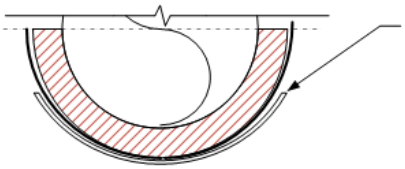

SUPPLEMENTARY DETAIL
PIPE SIZE NPS 18 TO 30

NOTES:
1. REFER TO SPECIFICATION SECTION 20 05 29 FOR TYPE AND SIZE OF INSULATION SHIELD.
2. REFER TO SPECIFICATION SECTION 20 05 29, SCHEDULE "C" AND SECTION 20 07 19 FOR APPLICABLE TYPES OF HIGH-DENSITY INSULATION INSERTS.

NOT TO SCALE

HHAngus	Sheet Title: COLD PIPING AND DUAL-TEMPERATURE PIPING TRAPEZE HANGER DETAIL	Date: 11 MAY 2023	Rev. No.: 02	Checked: PS
		Standard Detail No. 20 05 29 - 012		

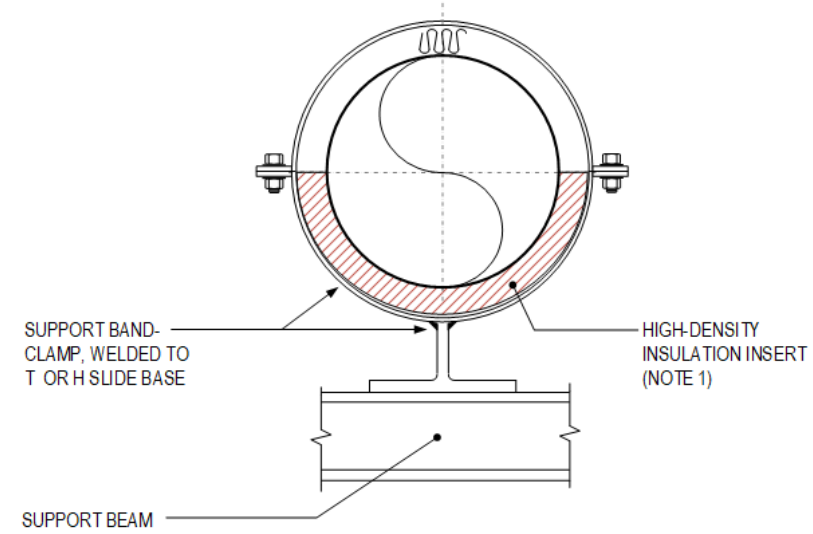

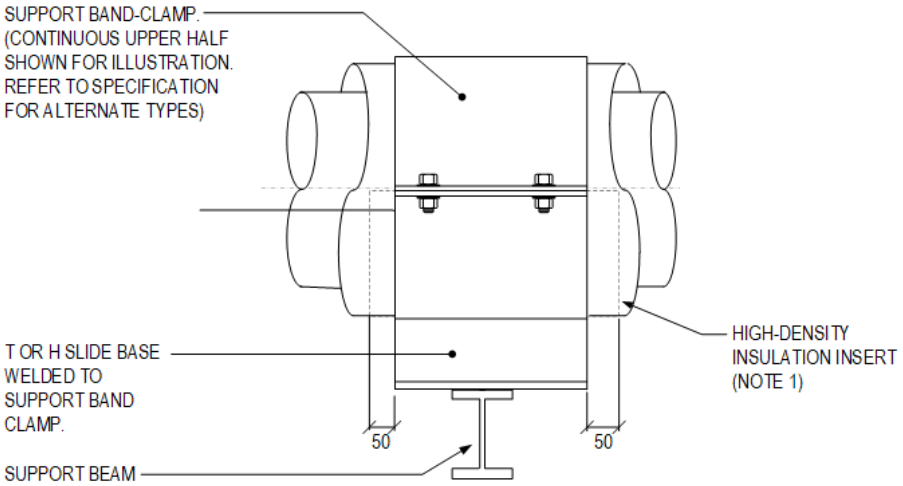

NOTES:
1. REFER TO SPECIFICATION SECTION 20 05 29, SCHEDULE "C" AND SECTION 20 07 19 FOR APPLICABLE TYPES OF HIGH-DENSITY INSULATION INSERTS.

NOT TO SCALE

HHAngus	Sheet Title: COLD PIPING AND DUAL-TEMPERATURE PIPING SLIDE SUPPORT DETAIL	Date: 11 MAY 2023	Rev. No.: 01	Checked: PS
		Standard Detail No. 20 05 29-013		

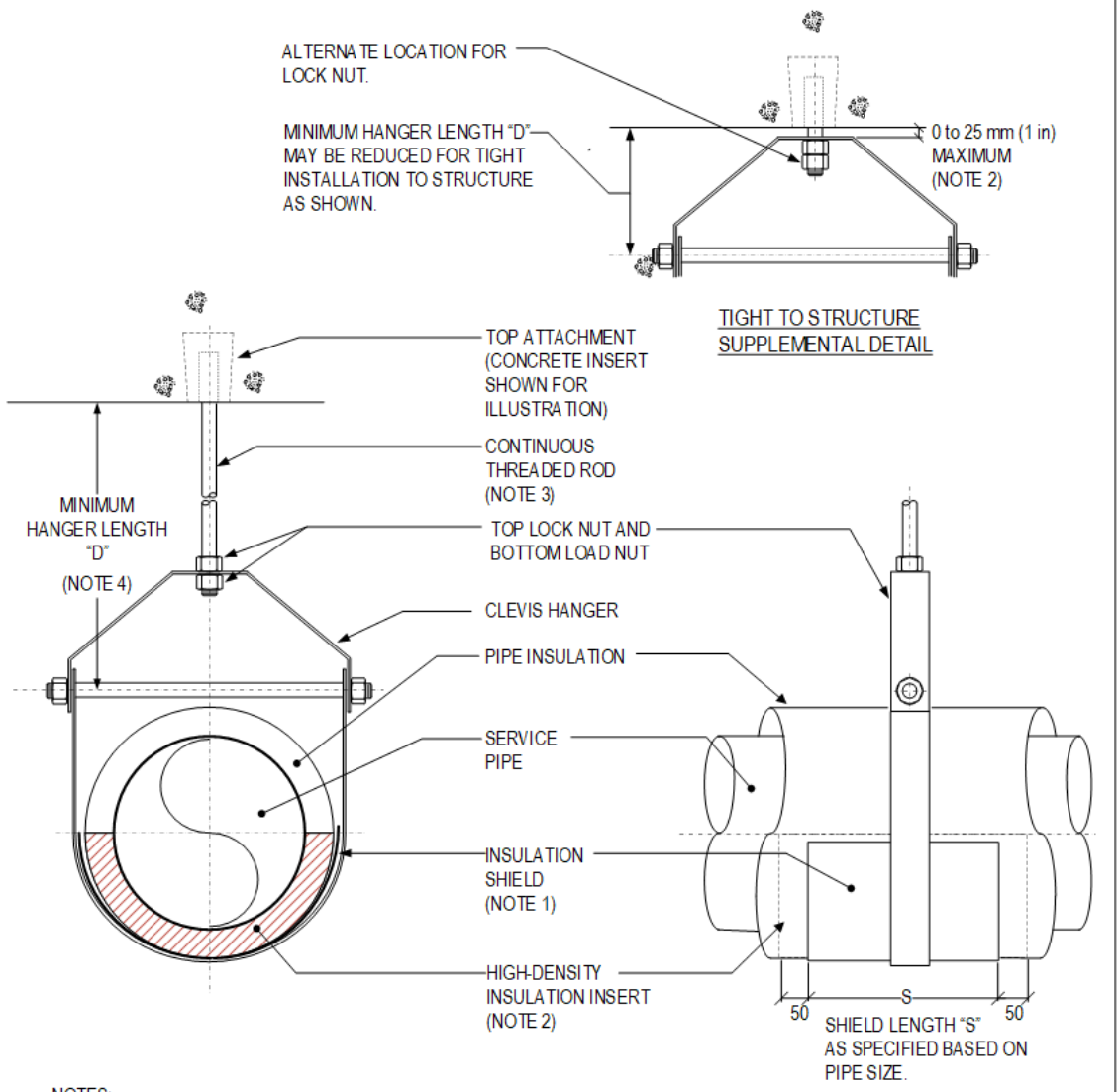

NOTES:

1. THIS DETAIL APPLIES TO HOT PIPING AT ALL TEMPERATURES AND ALL PIPE SIZES. SEE DETAIL 20 05 29-021 FOR ALTERNATE CLEVIS HANGER DETAIL FOR SMALL PIPE SIZES AT LOWER SERVICE TEMPERATURE.
2. REFER TO SPECIFICATION SECTION 20 05 29 FOR TYPE AND SIZE OF INSULATION SHIELD.
3. REFER TO SPECIFICATION SECTION 20 05 29, SCHEDULE "C" AND SECTION 20 07 19 FOR APPLICABLE TYPES OF HIGH-DENSITY INSULATION INSERTS.
4. EXCEPT FOR WHEN MOUNTED TIGHT TO THE STRUCTURE (SEE SUPPLEMENTAL DETAIL), THE MINIMUM HANGER LENGTH "D" SHALL CONFORM TO ADJACENT TABLE BASED ON FLUID SERVICE TEMPERATURE.

FLUID TEMPERATURE ° C	MINIMUM SUPPORT DISTANCE "D" mm (in.)
> 40 TO ≤ 65° C	100 (4)
> 65 TO ≤ 100° C	175 (7)
> 100 TO ≤ 121° C	270 (11)
> 121 TO ≤ 150° C	350 (14)
> 150 TO ≤ 200° C	500 (20)

NOT TO SCALE

HHAngus

Sheet Title:
HOT PIPING
CLEVIS HANGER DETAIL

Date: 08 MAY 2023 | Rev. No.: 03 | Checked: PS

Standard Detail No.
20 05 29 - 020

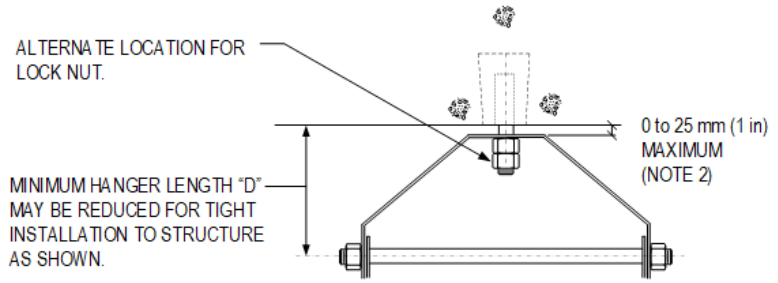

TIGHT TO STRUCTURE

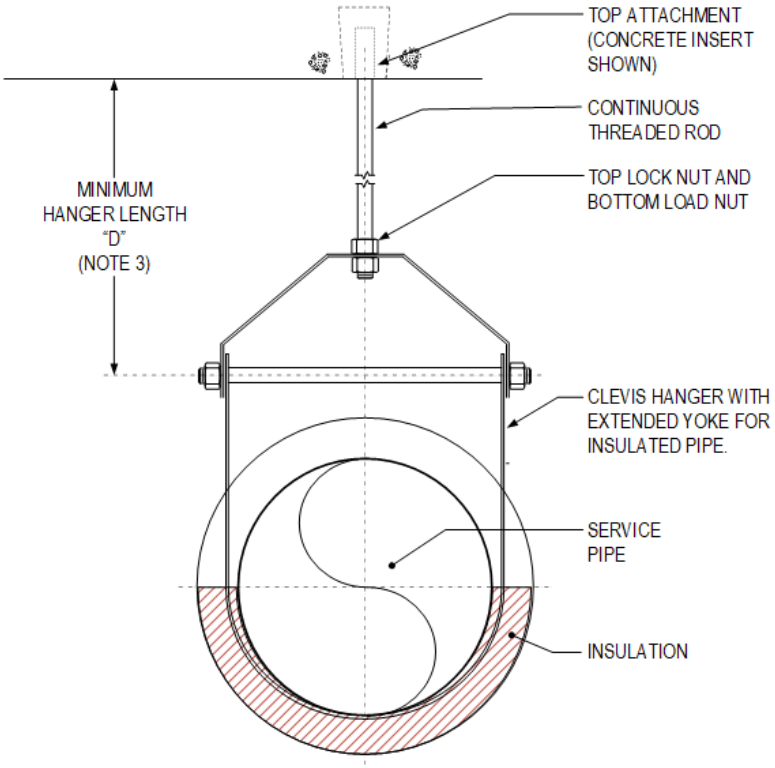

NOTES:
1. THIS DETAIL APPLIES TO HOT PIPING ≤ NPS 4 WITH FLUID TEMPERATURES ≤ 100°C.
2. MAXIMUM LENGTH OF EXPOSED ROD WHEN HANGER IS INSTALLED TIGHT TO STRUCTURE.
3. WHERE DIMENSION "D" WILL BE LESS THAN AS SHOWN IN THIS TABLE, USE ROLLER, TRAPEZE, OR SLIDE SUPPORTS.

FLUID TEMPERATURE ° C	MINIMUM SUPPORT DISTANCE "D" mm (in.)
> 40 TO ≤ 65° C	100 (4)
> 65 TO ≤ 100° C	175 (7)

NOT TO SCALE

HHAngus

Sheet Title:
HOT PIPING ≤ 100° C
SIZE ≤ NPS 4
CLEVIS HANGER DETAIL

Date:	Rev. No.:	Checked:
11 MAY 2023	00	PS

Standard Detail No.
20 05 29 - 021

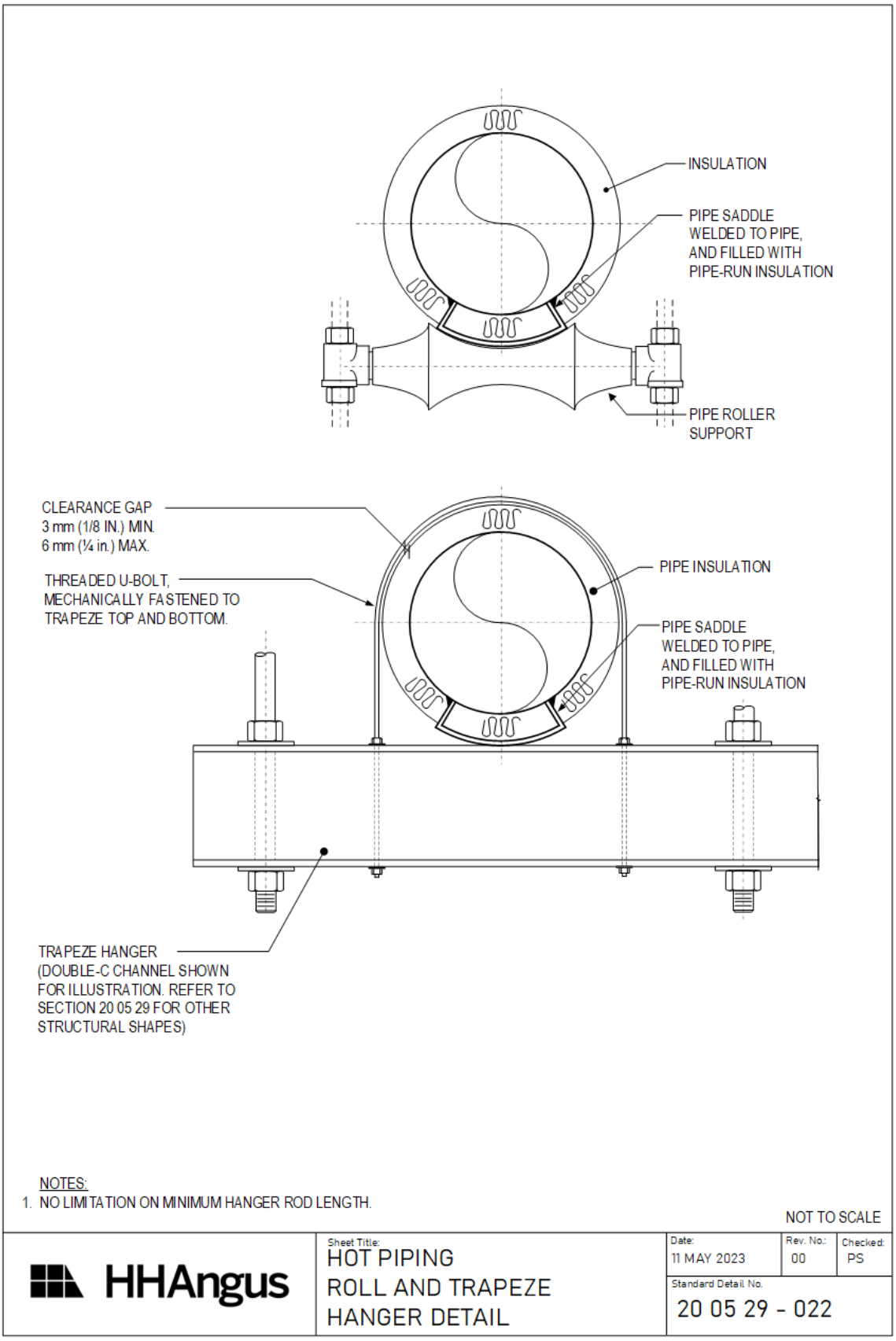
INSULATION
PIPE SADDLE WELDED TO PIPE, AND FILLED WITH PIPE-RUN INSULATION
PIPE ROLLER SUPPORT
CLEARANCE GAP 3 mm (1/8 IN.) MIN. 6 mm (¼ in.) MAX.
THREADED U-BOLT, MECHANICALLY FASTENED TO TRAPEZE TOP AND BOTTOM.
PIPE INSULATION
PIPE SADDLE WELDED TO PIPE, AND FILLED WITH PIPE-RUN INSULATION
TRAPEZE HANGER (DOUBLE-C CHANNEL SHOWN FOR ILLUSTRATION. REFER TO SECTION 20 05 29 FOR OTHER STRUCTURAL SHAPES)
NOTES:
1. NO LIMITATION ON MINIMUM HANGER ROD LENGTH.
NOT TO SCALE
HHAngus
Sheet Title:
HOT PIPING
ROLL AND TRAPEZE
HANGER DETAIL
Date:
11 MAY 2023
Rev. No.:
00
Checked:
PS
Standard Detail No.
20 05 29 - 022

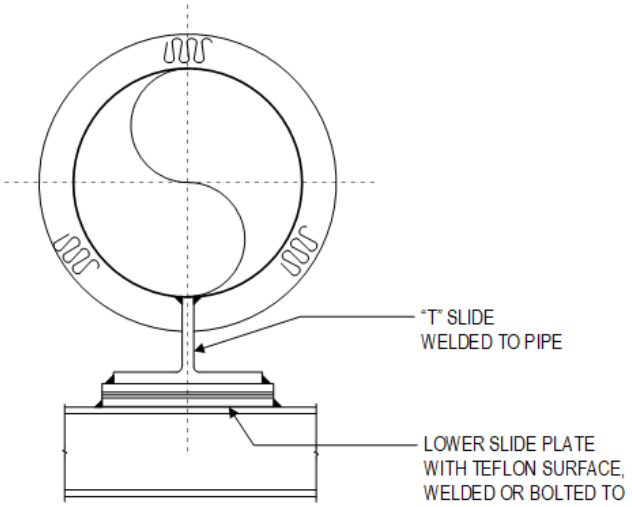

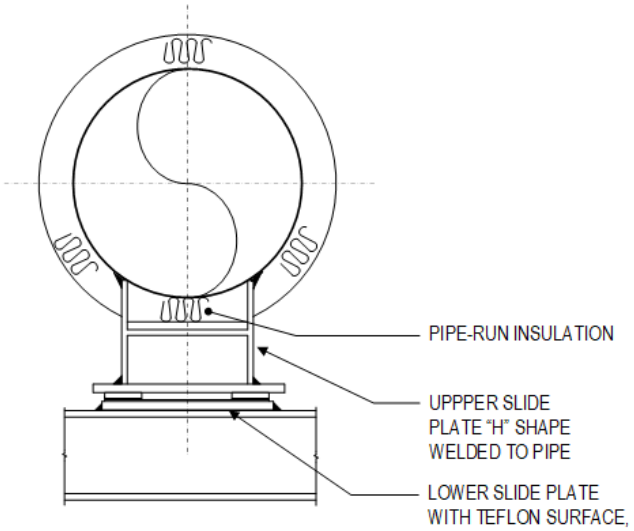

NOTES:
1. TEFLON SLIDE PLATES ONLY REQUIRED FOR HOT PIPING WITH SERVICE TEMPERATURE > 121° C, INCLUDING STEAM AT PRESSURES > 103 kPa.

NOT TO SCALE

HHAngus	Sheet Title: HOT PIPING SLIDE SUPPORT DETAILS	Date: 11 MAY 2023	Rev. No.: 00	Checked: PS
		Standard Detail No. 20 05 29 - 023		

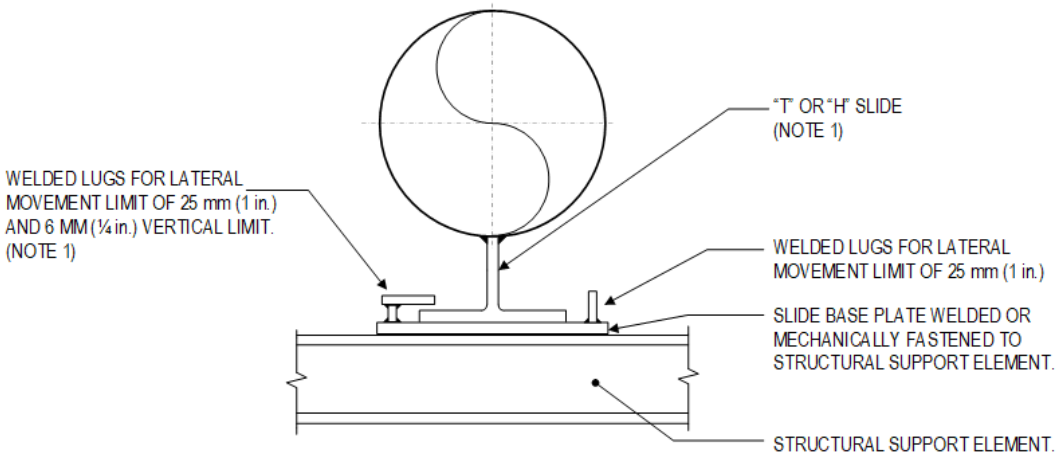

COMBINATION PIPE SLIDE AND EXPANSION GUIDE

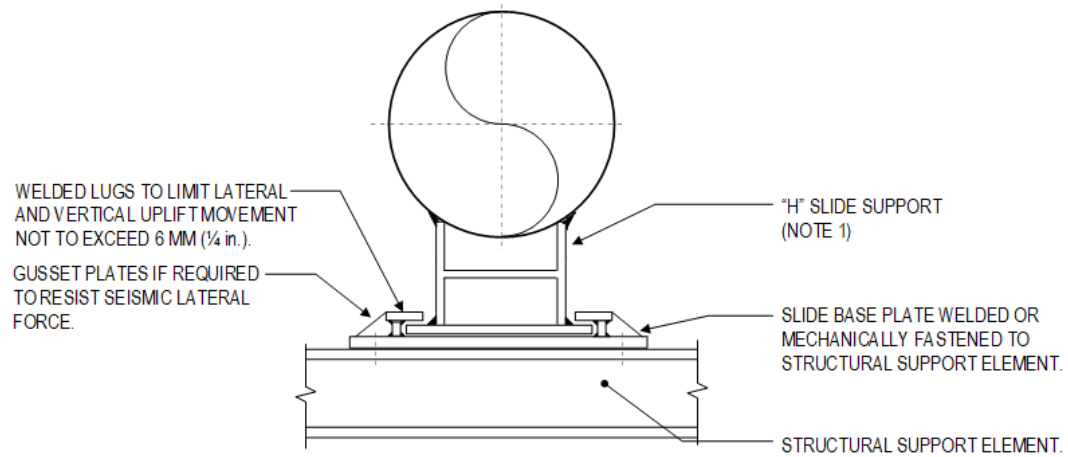

COMBINATION PIPE SLIDE AND TRANSVERSE SEISMIC RESTRAINT

NOTES:

1. REFER TO DETAILS 20 05 29-013 AND 20 05 29-023 FOR ADDITIONAL REQUIREMENTS FOR COLD PIPING AND HOT PIPING.

NOT TO SCALE

HHAngus	Sheet Title: SLIDE SUPPORTS GUIDES AND SEISMIC RESTRAINT	Date: 11 MAY 2023	Rev. No.: 00	Checked: PS
		Standard Detail No. 20 05 29 - 030		

END OF SECTION

IDENTIFICATION FOR MECHANICAL SERVICES
20 05 53

1 GENERAL

1.1 Scope

.1 Provide identification nameplates, labeling for piping, ductwork, equipment, and valves, and specialty signage.

1.2 Applicable Codes and Standards

.1 Installation codes and standards:

.1 ANSI Z535.1 Standards for Safety Signs and Labels

.2 ASME A13.1 Scheme for the Identification of Piping Systems

1.3 Submittals

.1 Shop drawings:

.1 Submit product data sheets for materials specified herein.

2 PRODUCTS

2.1 General

.1 Manufactured identification systems:

.1 resistant to general chemical, and ultraviolet stabilized for outdoor use,

.2 minimum operating temperature: -25°C (-12°F),

.3 maximum operating temperature: 121°C (250°F).

.4 language: English

Standard of Acceptance

- Brady - identification tapes, bands, and markers.
- Seton - Setmark Pipe Markers.
- Smillie McAdams Summerlin.
- Craftmark Identification Systems.
- Primark

2.2 Engraved Equipment Identification Nameplates

.1 Laminated nameplates:

.1 laminated two-layer coloured plastic plates, with engraved lettering,

.2 minimum size: 90 mm x 40 mm x 2.5 mm (3 in x 1½ in x ⅛ in),

.3 letter height:

(a) ID and name: 20 mm (3/4 in.) minimum

(b) power source: 10 mm (⅜ in) minimum,

.4 provided with Class 128 barcode and tag file,

.5 nameplate colours:

(a) nameplate and letter colours are dependent on type of electrical power supply to equipment.

Power Source	Background Colour	Letter Colour
Normal or None	White	Black
Life-Safety/ Emergency	Red	White
Stand-by (non-life safety)	Orange	White
UPS	Blue	White

2.3 Piping Identification – Piping Systems other than Medical Gas Systems

.1 General:

.1 conform to ASME A13.1 and as shown in Schedule A at the end of this Section for marking colours and global harmonization system (GHS) hazard identification symbols.

.2 text height:

Pipe/Tube NPS	Marker Length mm (in)	Text Height mm (in)
≤ 1-1/4	200 (8)	13 (0.5)
1.5 to 2	200 (8)	19 (0.75)
2.5 to 6	300 (12)	32 (1.25)
8 to 10	600 (24)	65 (2.5)
>10	800 (32)	90 (3.5)

.2 Flexible coil-wrap manufactured markers:

.1 PVC plastic coated markers with integral printing, or plastic cover with field applied self-adhesive markers,

.2 reversing text with integral arrow markers,

.3 application method:

(a) NPS ½ to NPS 6: full wrap of pipe

(b) NPS 8 and over: partial pipe wrap with perforations for securing with nylon tie-wraps, tie-wraps included.

.3 Self-adhesive vinyl flow direction marking bands:

.1 colour band tape with flow direction arrows,

.2 colours: as specified for pipe name markers.

.3 tape width: 50 mm (2 in)

.4 tape length: wrapped around pipe or covering with ends overlapping one pipe diameter but not less than 25mm (1 in).

.5 flow arrow: 20 mm (¾ in) minimum high

2.4 Ductwork Identification

.1 Punched stencils in PVC or card material, suitable for application of field painting.

.2 Letter height: 50 mm (2 in).

.3 Letter paint colour: black.

2.5 Valve and Steam Trap Identification

.1 Engraved plastic laminate tags:

.1 text for valves:

(a) piping system fluid service, area location description, following by a series number

(b) where a valve is shown on drawings to be normally closed, include “Normally Closed”

.2 text for steam traps: abbreviation for steam pressure (e.g. “S70”) as shown, followed by a series number,

.3 tag background colour and test colour: same as for pipe markers in accordance with Schedule A at the end of this section.

.4 brass or stainless steel chain.

2.6 Miscellaneous Identification

.1 Self-adhesive polyester marking labels with global harmonized system (GHS) hazard pictograms.

.1 red border on white field,

.2 symbol height: 100 mm (4 in) minimum.

2.7 Signage

.1 Rigid plastic signs, UV stabilized and suitable for indoor and outdoor installation, for surface mounting.

.2 Graphic symbols:

.1 graphic image in accordance with WHIMS and ISO 7010,

.2 sign dimensions:

(a) indoors: 300 x 300 mm (12 in. x 12 in.)

(b) outdoors: 450 x 450 mm (18 in. x 18 in.)

.3 Colours:

.1 Field and text colours in accordance with ANSI Z535.1

Information Type	Background Colour	Letter Colour	Primary Notification Text
General information	Blue	White	NOTICE
General Safety, Exiting	Green	White	---
Caution	Yellow	Black	CAUTION
Warning	Orange	Black	WARNING
Danger	Red	White	DANGER
Biological	Fluorescent Orange	Black	BIOHAZARD

3 EXECUTION

3.1 Equipment Identification

.1 Where required:

.1 provided for equipment identified with number designations shown in equipment schedules, drawings, specifications, and/or equipment selection sheets.

.2 marked with equipment ID, service name, and power source using wording and numbering used in contract documents.

.3 for clarity, equipment identification nameplates are in addition to manufacturers plates.

.2 Locate nameplates to be easily read, and fasten securely with mechanical fasteners. For pressure vessels, secure nameplates to equipment with high-tensile epoxy adhesive.

.3 Do not paint over equipment manufacturer or field installed nameplates.

.4 Provide metal standoffs on insulated equipment.

.5 Examples:

.1 at equipment (fan, pump, etc.), illustrated for Normal Power:

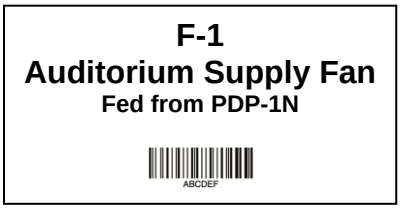

.2 at motor starter, adjustable frequency drive, and separate local disconnect, illustrated for Emergency Power:



3.2 Piping Identification - General

.1 Except where otherwise specified herein, provide manufactured pipe markers of the following types based on area of the building:

.1 self-adhesive type:

(a) indoor uninsulated piping,

(b) indoor insulated piping with PVC or smooth metal jackets,

.2 flexible coil-wrap:

(a) outdoor piping,

(b) indoor insulated piping with any type of jacket.

.3 Install self-adhesive markers on cleaned and prepared surfaces free of dirt and oil.

.2 Install pipe markers in the following locations:

.1 maximum every 15 m (50 ft) along length of pipe, except for natural gas and fuel oil,

.2 maximum every 6 m (20 ft) along length of pipe for natural gas and fuel oil,

.3 within 1 m (3 ft) of each side of barriers, floors and walls,

.4 within 1 m (3 ft) of and behind access doors ,

.5 within 1 m (3 ft) of piping termination point.

.3 Marker colours and hazard identification:

.1 [Provide pipe markers with the colour coding and hazard identification symbols in accordance with Schedule A at the end of this section.][]

.2 [][Use the existing piping marker colour coding system for building additions and alterations.]

3.3 Ductwork identification

.1 Paint stenciled letters showing;

.1 duct service,

.2 fan number, and

.3 arrows showing direction of flow,

.2 Paint stencil markings at the following locations:

.1 exposed ducts at 15 m (50 ft) intervals in service rooms,

.2 exposed ducts at wall and floor penetrations in other than service rooms,

.3 concealed ducts above drywall-ceilings next to access doors, and

.4 concealed ducts above removable tile ceilings at wall and floor penetrations, and at 15 m (50 ft) intervals.

.3 Stencil indication on prepared surfaces, and locate on both sides of any penetration.

.4 [][Hazard warning labels:

.1 provide hazard marking symbols on ductwork and associated equipment in accordance with Schedule B at the end of this Section.

.2 install labels adjacent to ductwork identification system, and on designated equipment adjacent to equipment identification nameplate and on each access opening into the equipment.

3.4 Valve Identification

.1 Provide valves with a numbered tag showing valve type and size, attached to valve stem or wheel handle with chain.

.1 Valve identification is not required at the following valves:

(a) inside fire hose cabinets,

(b) radiation heating units, unit heaters, or fixture stops,

(c) plumbing fixture service stops,

(d) within 4 m (12 ft) and in sight of equipment, fixtures, or apparatus that the valve controls provided there is no branch piping between the valve and equipment served,

(e) existing valves that are not provided under this project.

.2 Identification information – manual valves:

.1 each valve tag to indicate fluid service, sequential valve number (unique for each service) including supply or return, location identifier, and normal operating position

.2 examples (colour coding shown for illustration):

Domestic Cold Water
Riser C/1
No. 12

Natural Gas
Boiler Plant
No. 2
Normally Closed

.3 Identification information – automatic control valves:

.1 provide valve tags for all automatic control valves except as follows:

(a) within sight of equipment that the valve controls.

.2 each valve tag to indicate fluid service, control function, control valve identification number,

.3 examples (colour coding shown for illustration):

Chilled Water
Constant Pressure
Differential Valve
CV-3

.4 Provide a tag schedule for each system, designating valve numbers, fluid service, function, valve size, and location of each tagged item and normal operating position of each valve. Submit copies in original file format (Excel, Word) on two (2) removable mass storage devices.

3.5 Schedules

.1 The following Schedules form part of this specification section.

.1 Schedule A: Piping Marker Colours and Hazard Labels

Schedule A – Piping Marker Colours and Hazard Labels

Fluid Service Category	Piping Services	Background Colour	Lettering Colour	GHS Hazard Symbol
Water	Potable (city) water, Non-potable water, Treated City Water, Sanitary, Storm Drainage, Chilled water, Condenser water, Cooling water, Heating water, Glycol heating or cooling water, Brine water, Boiler feedwater, Steam condensate	Green	White	None
Vapour from Water	Steam, Steam Vents	White	Black	None
Fire Protection Fluids	Sprinklers, Standpipe, Foam, Gaseous	Red	White	None
Combustible Liquids	Heating oil, Diesel, Lubrication oil, Hydraulic oil	Brown	White	None
Flammable Fluids	Natural Gas, Propane	Yellow	Black	None
	Gasoline	Yellow	Black	
Compressed Air	Compressed Air, Instrument Air, Laboratory Air	Blue	White	None
Compressed Gases	Nitrogen, Helium, Carbon Dioxide	Grey	White	
Other Gases	Vacuum, Laboratory Vacuum, Plumbing Vents	Grey	White	None

Fluid Service Category	Piping Services	Background Colour	Lettering Colour	GHS Hazard Symbol
Oxidizing Fluids	Chlorine	Yellow	Black	
Toxic and Corrosive Fluids	HVAC chemical treatment, Acid Drain, Acid Vent Decontamination Drain and Tank	Orange	Black	
Radioactive Fluids	Isotope Drain, Isotope Vent	Orange	Black	 (ISO 7010)

END OF SECTION

COMMON REQUIREMENTS FOR MECHANICAL INSULATION
20 07 11

1 GENERAL

1.1 Scope

.1 Common requirements for insulation of mechanical services provided under Division 20 to 25 of the Work. The requirements of this specification section apply to separate specification sections for insulation of ductwork, equipment and piping.

1.2 Related Sections

.1 Without limiting the scope of work or applicability of other specification sections, the work under this section directly integrates with or refers to the following specification sections:

.1	20 05 29	Common Hanger and Support Requirements for Piping
.2	20 07 13	Duct Insulation
.3	20 07 16	Equipment Insulation
.4	20 07 19	Piping Insulation
.5	20 05 29	Common Hanger and Support Requirements for Piping

1.3 Definitions and Abbreviations

.1 The following definitions apply to this section.

.1 ***Ambient****:* as applied to temperatures means the interior or outdoor air temperature at time of installation.

.2 ***Coating***: light-consistency compound for indoor applications used in conjunction with reinforcing membrane, to provide either a breathable or vapour barrier finish to insulation.

.3 ***Cold services***: means cold ductwork, equipment and/or equipment.

(a) ***Cold ductwork***: mechanical ductwork with a service temperature greater than 1°C and up to and including 16°C (34°F to 61°F).

(b) ***Cold equipment***: mechanical equipment with a service temperature of 16°C (61°F) or less,

(c) ***Cold piping***: mechanical piping with a service temperature of 16°C (61°F) or less,

.4 ***Concealed (services)***: mechanical services that are located: in the space above opaque suspended ceilings; within trenches not located in service rooms; within pipe and/or duct shafts; or in non-accessible chases and wall cavities.

.5 ***Conditioned air***: air supplied from air handling units that heats, cools, dehumidifies, or humidifies the air.

.6 ***Conditioned space***: an enclosed space or room that is heating, cooled, dehumidified and/or humidified.

.7 ***Dual temperature services:*** means dual temperature ductwork, piping and/or equipment that operates, at different times, at both hot and cold temperatures.

(a) ***Dual temperature ductwork***: mechanical ductwork that operates at temperatures greater than 1°C and up to and including 38°C (34°F to 100°F), at different times or at different locations in the duct system and includes cooling systems with terminal reheat.

(b) ***Dual temperature equipment***: means mechanical equipment that operate, at different times, at cold equipment temperatures and at hot equipment temperatures.

(c) ***Dual temperature piping***: mechanical piping that operate, at different times, at cold piping temperatures and at hot piping temperatures.

.8 ***Ductwork*****:** includes ducts, fans, air handling equipment casings, and plenums.

.9 ***Exposed (services)***: mechanical services that are located in areas that are not "concealed" as defined above for concealed services. For greater certainty, the following locations are exposed services:

(a) services in tunnels,

(b) services in space beneath raised floors.

(c) trenches located in service rooms.

.10 ***Finish covering***: a field-applied protective layer for insulation that provides an aesthetic finish but that may also provide mechanical-impact protection, weather-protective, moisture and/or vapour barrier protection.

.11 ***Hot services***: means hot ductwork, piping and/or equipment.

(a) ***Hot ductwork***: mechanical ductwork with a service temperature greater than 28°C and up to and including 65°C (80 to 150°F) and does not have any mechanical cooling.

(b) ***Hot equipment***: mechanical equipment with a service temperature 38°C (100°F) and greater.

(c) ***Hot piping***: mechanical piping at service temperatures as shown in Schedule A1 of specification section 20 07 19.

.12 **Jacket:** a factory-applied material used to contain insulation and may function as a vapour barrier. Jacketed insulation may also be further protected by covering with a finish covering.

(a) ***All Service Jacket (ASJ)*** – an insulation covering suitable for hot services and functions as a vapour barrier on cold services, typically constructed of laminated white kraft paper (outside surface) reinforced with fibreglass and bounded to an inner aluminium foil substrate.

(b) ***Foil Scrim Kraft (FSK)*** – an insulation covering suitable for hot services and functions as a vapour barrier on cold services, typically constructed of a laminate aluminium foil (outside surface) reinforced with fibreglass and bounded to an inner kraft paper layer.

(c) ***Polypropylene Scrim Kraft (PSK)*** - an insulation covering suitable for hot services and functions as a vapour barrier on cold services, typically constructed of a laminate polypropylene layer (outside surface) reinforced with fibreglass and bounded to an inner kraft paper layer.

.13 ***Mastic***: heavy-consistency waterproof compound for outdoor applications, used in conjunction with reinforcing membrane that remains adhesive and generally pliable with age, to provide either a breathable or vapour barrier finish for outdoor insulation.

.14 ***Mechanical services***: equipment, piping, ductwork and related accessories provided under Division 20 to 25 of the Work.

.15 ***Outdoor (services)***: mechanical services located outside of the building envelope including services located beneath overhangs, located in unconditioned soffits, or exposed to any outdoor condition including temperature, sun exposure, or precipitation.

.16 ***Pure water***: water that has been treated with filtration equipment, including but not limited to reverse osmosis, deionization, ultra-filtration, ultra-violet, distillation or any combination of such or similar equipment, to achieve water quality significantly free of impurities.

.17 ***Service temperature***: the highest (for hot mechanical services) or the lowest (for cold mechanical services) gas or vapour design operating temperature, or the liquid supply operating temperature.

.18 ***Surface temperature***: for the purpose of this specification, has the same meaning as service temperature.

.19 ***Unconditioned (space)***: rooms or spaces that are not conditioned spaces, and includes ceiling spaces which are not part of a ceiling return air plenum system.

.20 ***Wet area:*** spaces subject to high humidity or where mechanical services may be exposed to direct contact with water, including not limited to: pools, shower rooms, tub rooms, medical device reprocessing, dishwashers, sterilizers, cart-washing, vehicle washing, and emergency showers.

1.4 Applicable Codes and Standards

.1 Installation codes and standards:

.1	NFPA 90-A	Installation of Air-Conditioning and Ventilating Systems
.2	ASHRAE/IES 90.1	Energy Standard for Buildings Except Low-Rise Residential Buildings
.3	NFPA 255	Test of Surface Burning Characteristics of Building Materials

.2 Product standards:

.1	CAN/ULC-S102	Standard Method of Test for Surface Burning Characteristics of Building Materials and Assemblies
.2	CAN/ULC-S102.2	Standard Method of Test for Surface Burning Characteristics of Flooring, Floor Coverings, and Miscellaneous Materials and Assemblies
.3	CAN/ULC-S114	Standard Method of Test for Determination of Non-Combustibility in Building Materials
.4	ASTM B209	Standard Specification for Aluminum and Aluminum-Alloy Sheet and Plate
.5	ASTM B240	Standard Specification for Chromium and Chromium-Nickel Stainless Steel Plate, Sheet, and Strip for Pressure Vessels and for General Applications
.6	ASTM C177	Standard Test Method for Steady-State Het Flux Measurements and Thermal Transmission Properties by Means of the Guarded Hot-Plate Apparatus
.7	ASTM C411	Standard Test Method for Hot Surface Performance of High Temperature Thermal Insulation
.8	ASTM C449	Standard Specification for Mineral Fibre Hydraulic-Setting Thermal Insulation and Finishing Materials
.9	ASTM C518	Standard Test Method for Steady State Thermal Transmission Properties by Means of Heat Flo Meter Apparatus
.10	ASTM C533	Standard Specification for Calcium Silicate Block and Pipe Thermal Insulation
.11	ASTM C534	Standard Specification for Preformed Flexible Elastomeric Cellular Thermal Insulation in Sheet and Tubular Form
.12	ASTM C547	Standard Specification for Mineral Fiber Pipe Insulation
.13	ASTM C552	Standard Specification for Cellular Glass Thermal Insulation
.14	ASTM C553	Standard Specification for Mineral Fiber Blanket Thermal Insulation for Commercial and Industrial Applications
.15	ASTM C591	Standard Specification for Unfaced Preformed Rigid Cellular Polyisocyanurate Thermal Insulation
.16	ASTM C612	Standard Specification for Mineral Fiber Block and Board Thermal Insulation
.17	ASTM C795	Standard Specification for Thermal Insulation for Use in Contact with Austenitic Stainless Steel
.18	ASTM C892	Standard Specification for High-Temperature Fiber Blanket Thermal Insulation

.19	ASTM C1126 (Gr.1)	Standard Specification for Faced and Unfaced Rigid Cellular Phenolic Thermal Insulation
.20	ASTM C1139	Standard Specification for Fibrous Glass Thermal Insulation and Sound Absorbing Blanket and Board for Military Applications
.21	ASTM C1290	Standard Specification for Flexible Fibrous Glass Blanket Insulation Used to Externally Insulate HVAC Ducts
.22	ASTM C1393	Standard Specification for Perpendicularly Oriented Mineral Fiber Roll and Sheet Thermal Insulation for Pipes and Tanks
.23	ASTM E84	Standard Test Method for Surface Burning Characteristics of Building Materials
.24	CGSB 51-GP-52MA	Vapour Barrier, Jacket and Facing Material for Pipe, Duct, and Equipment Thermal Insulation.
.25	CGSB 51.53-95 and	Poly(Vinyl Chloride) Jacket Sheeting, for Insulated Pipes Vessels Round Ducts.

1.5 Qualified Tradespersons

.1 Work to be performed by a recognized specialist firm with an established reputation in this field.

Standard of Acceptance

- Custom Insulation Systems
- White & Greer Co Ltd
- Thermax Environmental Inc.
- ICON Insulation Inc.

1.6 Submittals

.1 Submit manufacturer catalogue cut-sheets for the following materials in one bound submission;

- .1 insulation,
- .2 coatings, mastics, and sealants,
- .3 reinforcing membranes,
- .4 finish covering materials,
- .5 PVC fitting covers.

.2 Submit an installation detail drawing indicating how insulation, coatings and vapour barriers are applied in general, and specifically for pipe fittings and equipment insulation.

1.7 Quality

.1 Manufacturers and products are listed in this section to establish quality and manufacturing standards. Products from other manufacturers with explicitly similar characteristics may be acceptable but must be submitted as an alternative product submission.

2 PRODUCTS

2.1 General Requirements

.1 Adhesives, coatings, finish coverings, lagging, sealers, and tapes:

- .1 maximum flame spread rating of 25 to CAN/ULC-S102/102.2 or ASTM 84.
- .2 maximum smoke developed rating of 50 to CAN/ULC-S102/102.2 or ASTM 84.

.3 exception: vapor barrier mastics on mechanical services located outside of the building.

2.2 Adhesives, Fasteners, and Tape

.1 Contact bond cement:

.1 for quick setting for metal surfaces.

.2 Volatile Organic Content: maximum 80 g/L.

Standard of Acceptance

- Bakor - fig. 220-05
- Foster – fig. Drion 85-75

.2 Adhesive for flexible closed cell foam insulation:

.1 Volatile Organic Content: maximum 80 g/L.

Standard of Acceptance

- Armacell - Armaflex 520 BLV
- Armacell - Armaflex. Low VOC Spray Contact Adhesive

.3 Lap seal adhesive:

.1 for joints and lap sealing of vapour barriers.

.2 Volatile Organic Content: maximum 250 g/L.

Standard of Acceptance

- Bakor - fig. 220-05
- Childers - fig. CHIL-STIX FRN CP-82

.4 Fibrous insulation adhesive:

.1 Volatile Organic Content: maximum 250 g/L

Standard of Acceptance

- Childers - fig. CHIL-STIX FRN CP-82
- Foster - fig. 85-70

.5 Vapour barrier tape:

.1 colour matched and foil faced

.2 listed to UL 181A.

Standard of Acceptance

- Johns Manville - fig. Zeston Z-Tape
- MacTac Canada Ltd – fig. Vinyl Scrim or Foil Scrim Kraft
- Compac Corp.
- Fattal Canvas Inc. - fig. Insultape

.6 Weld pins, studs, clips and washers:

.1 Galvanized steel or copper plated steel, stainless steel or aluminium to match ductwork material.

.2 Attachment method:

(a) welded for outdoor ducts,

(b) welded for indoor ducts,

(c) self-adhesive base may be used for vertical surfaces of rectangular ducts.

Standard of Acceptance

° Midwest - fig. Fasteners
° Jordahl - fig. Studwelding

.7 Staples:

.1 Monel, flare type, minimum size 12 mm (½ in).

.8 Tie wire:

.1 1.6 mm (16 ga) stainless steel with twisted ends.

.9 Caulking for sheetmetal finish covers (outdoor use only)

.1 fast-drying, aluminum colour finish, flexible butyl elastomer based vapour barrier sealant.

Standard of Acceptance.

° Foster - fig. 95-44

2.3 Coatings and Reinforcing Membranes

.1 Reinforcing membrane:

.1 synthetic fibre:

(a) Leno weave,

(b) indoor and outdoor use.

Standard of Acceptance

° Foster - fig. Mast-A-Fab

.2 glass-fibre fabric:

(a) indoor use.

Standard of Acceptance

° Childers - fig. Chil-Glas #5/#10

.3 glass-fibre fabric for use with elastomeric closed cell foam:

(a) indoor use.

Standard of Acceptance

° Childers - fig. Chil-Glass #10

.2 Breather coating - Indoors:

.1 for breather coatings and lagging adhesive,

.2 Volatile Organic Content: maximum 50 g/L

.3 white in colour,

Standard of Acceptance

° Childers- fig. CP-50A HV2
° Foster - fig. 30-36

.3 Breather mastic - Outdoors:

.1 for breather coatings and lagging adhesive,

.2 abrasion resistive, flexible,

.3 UV stabile,

.4 grey in colour.

Standard of Acceptance

° Childers - fig. Vi-Cryl CP-10/11
° Foster - fig. 35-00 / 45-00
° Bakor - fig. 120-10

.4 Vapor barrier coatings - Indoors:

.1 Volatile Organic Content: maximum 50 g/L.

.2 for vapor barrier coatings and lagging adhesive except for elastomeric closed cell foam,

(a) permeance rating 0.02 perms maximum,

(b) white in colour

Standard of Acceptance

° Childers - fig. Chil Perm CP-34/35
° Foster - fig. 30-80, 30-90

.5 Vapor barrier mastic - Outdoors:

.1 for vapor barrier coatings and lagging adhesive,

.2 asphalt cutback,

.3 permeance rating 0.02 perms maximum,

.4 grey in colour.

.5 for outdoor use only.

Standard of Acceptance

° Childers - fig. Chil-Pruf CP-22
° Foster - fig. 60-25/60-26

.6 Vapour barrier coatings – elastomeric foam insulation:

.1 for indoor and outdoor use,

.2 water bases sealer/finishing coat, water and UV resistant.

.3 white in colour.

Standard of Acceptance

° Armacell - fig. ArmaFlex WB Finish

2.4 Insulation Finishing Cement

.1 Mineral fibre, hydraulic-setting insulation cement, to ASTM C449

.2 Temperature rating: 650°C (1200°F)

Standard of Acceptance

° Johns Manville - fig. CalCoat-127

- Ramco Insulation - fig. Ramcote 1200 (PKI Quick Cote)

2.5 Field Applied Coverings

.1 Fabric finish covering:

.1 plain weave cotton fabric at 220 g/m2 (6 oz/sq yd), treated with fire retardant lagging adhesive, or

.2 re-wetable fiberglass lagging fabric with water activated self-adhesive.

.3 suitable for field painting.

Standard of Acceptance

- Fattal - fig. Thermocanvas
- Clairmont - fig. Diplag 60
- Newtex - fig. Zetex Rewettable

.2 PVC finish covering:

.1 PVC sheeting, or pre-cut and rolled sheeting to suit OD of pipe and insulation, with UV inhibitor for white colour product,

(a) minimum thickness:

i) indoors: 0.5 mm (20 mil-in.),

ii) outdoors: 0.8 mm (30 mil-in.),

(b) maximum operating temperature: 66°C (150°F) at the material,

(c) listed to CAN/ULC-S102/S102.2 or ASTM E84,

.2 PVC fitting covering with integral insulation inserts:

(a) minimum 0.5 mm (20 mil-in) thickness,

(b) pre-molded fitting covers, one or two piece,

(c) maximum operating temperature: 66°C (150°F) at the material,

(d) self-sealing longitudinal joints or field applied sealer adhesive,

(e) listed to CAN/ULC-S102/S102.2 or ASTM E84,

.3 colour: [white][in accordance with the following:

(a) city water, domestic water, non-potable water: green

(b) HVAC water: green

(c) steam and condensate: grey

(d) RO water: green]

.4 foam-glass or glass-fibre insulation molded insert, including for elbows, tees, valves, end-caps, and mechanical pipe couplings,

.5 multiple layers where required for thicker pipe insulation thicknesses.

.6 pressure sensitive, colour matching vinyl tape.

Standard of Acceptance

- Johns Manville - fig. Zeston 2000
- Proto PVC - fig. LoSMOKE
- ACWIL Insulations
- Sure Fit Systems

.3 Metal finish covering:

.1 straight pipe, duct or plenum:

(a) stucco embossed aluminum 3105 or 3003 to ASTM B-209, not less than 0.45 mm (0.016 in) thick sheet, with integral 3 mil polyfilm moisture barrier on the interior surface, lock-forming quality,

(b) stainless steel type 304 to ASTM A-240, not less than 0.25 mm (0.010 in) thick sheet, lock-forming quality;

i) stucco embossed,

ii) 0.19 mm (3/16 in) corrugated.

.2 fittings:

(a) custom made swaged ring or lobster back covers on bends and die shaped fitting covers over pipe fittings, round duct fittings, valves, strainers, flanges, and grooved couplings.

.3 bands:

(a) 12 mm (½ in) wide stainless steel with mechanical fasteners.

Standard of Acceptance

° Alcan Canada Products - fig. Thermaclad Type 1
° Childers Products Inc. - fig. Fab Straps

.4 Protective finish for elastomeric cellular foam insulation

.1 indoors and outdoors:

Standard of Acceptance

° Armaflex WB Finish

2.6 Insulation

.1 Refer to specification sections for duct, equipment, and piping insulation.

3 EXECUTION

3.1 General Requirements

.1 Apply insulation after pressure and leakage testing is completed and accepted, and heat tracing (if any) is installed.

.2 Surfaces to be clean and dry before application of insulation.

.3 Store and use adhesives, mastics, and insulation cements at ambient temperatures and conditions recommended by the product manufacturers.

.4 Do not apply insulation on chrome plated surfaces of piping, valves, fittings, and equipment.

.5 Cut and bevel insulation around nameplates and pressure vessel certification stamps, seals or similar markings.

.6 Neatly finish insulation at supports, protrusions, and interruptions.

.7 Where insulation media is exposed, seal the insulation with reinforced vapor barrier or breather coating or mastic.

3.2 Installation of Insulation

.1 Refer to specification sections for duct, equipment, and piping insulation.

3.3 Sealing of Insulation – General Requirements

.1 The following requirements apply to all mechanical insulation unless otherwise specified in each mechanical service insulation specification section. Refer to separate specifications for specific sealing requirements for ductwork, equipment and piping insulation.

.2 Apply sealer coatings and mastic in accordance with the following:

.1 use breather coating/mastics for hot services:

.2 use vapour barrier coating/mastic for cold and dual temperature services:

.3 only use mastics on outdoor installations.

.4 apply mastics and coatings when ambient temperature is above 4°C (40°F), unless manufacturer's instructions permit colder ambient installation conditions.

.3 Maintain integrity of vapour barrier through sleeves, around fittings and at hangers and supports.

3.4 Insulation Finish Coverings

.1 Where required to be provided by other mechanical insulation specification sections, install protective finish coverings in accordance with the following.

.2 Install protective finish coverings on insulation after breather and vapor barrier sealing is completed.

.3 For hot services that are exposed in wet areas, secure and seal coverings in accordance with the requirements for cold and dual temperature services.

.4 Cut finish covering materials to allow 50 mm to 100 mm (2 in to 4 in) overlaps onto adjacent sheets. On vertical services, arrange circumferential overlaps to be on the lower end of each cover section.

.5 PVC finish covering:

.1 Adhesives and sealers to be compatible with PVC material.

.2 Hot services;

(a) secure sheeting with colour matched tape around circumference, at least two places per section of sheet, and by stapling longitudinal and circumferential edges,

(b) except in wet areas, do <u>not</u> seal major joint edges with vapour barrier tape,

(c) seal PVC fitting covers at throat and heel seams by stapling and secure over adjacent insulation covers by banding or taping ends to adjacent finish covering with colour matched tape.

(d) Install PVC covers in accordance with the requirements for cold and dual temperature services.

.3 Cold and dual temperature services:

(a) seal longitudinal edges with vapor barrier coating adhesive or colour matched vapour barrier tape for the full length and depth of the overlap,

(b) seal circumferential butt edges of PVC fitting covers with reinforced vapour barrier coating adhesive extending over adjacent pipe insulation section with an overlap of at least 50 mm (2 in),

(c) seal PVC fitting covers at throat and heel seams by solvent bonding and secured over insulation with reinforced vapor barrier coating overlapping adjacent service insulation a minimum of 50 mm (2 in),

(d) neatly finish exposed edges with vapour barrier sealant/mastic.

.6 Metal finish covering:

.1 use stucco embossed metal finish covers on round surfaces with diameter of 2.4 m (8 ft) and smaller; refer to applicable duct, equipment and piping specification sections for metal type.

.2 use corrugated stainless steel metal finish covers on flat surfaces, and on round surfaces with diameters greater than 2.4 m (8 ft).

.3 apply metal finish coverings over mechanical services, with a 60 mm (2-1/2 in) overlap,

.4 use lock-on systems or secure sheeting with bands 450 mm (18 in) apart.

(a) make-up curved surfaces with custom made swaged ring or lobster back covers.

.5 for indoor mechanical services;

(a) seal cover joints for cold and dual temperature services with clear or colour-matched calking.

(b) on outdoor mechanical services;

(c) seal cover joints for cold and dual temperature services with clear or colour-matched calking to permit expansion of metal finish covers.

.7 Fabric finish covering:

.1 Cotton lagging:

(a) apply cotton lagging with minimum two coatings of breather or vapor barrier coating adhesive as applicable to the piping system, and finish to provide a smooth surface free of wrinkles and sags.

(b) where cotton lagging with appropriate coating is used this satisfies the requirements of a sealer coating for cold and dual temperature services.

.2 Fiberglass lagging:

(a) apply re-wettable fiberglass lagging in accordance with manufacturer instructions, and finish to provide a smooth surface free of wrinkles and sags.

(b) for cold and dual temperature services, apply a finish coat of vapour barrier sealer.

(c) where re-wettable fiberglass lagging is used this satisfies the requirements of a breather coating for hot piping systems,

3.5 Mechanical Damage Protection - Indoors

.1 Protect visible pipe insulation extending up through a floor sleeve at the floor line with 1.2 mm (18 ga) thick stainless steel protection shield approximately 100 mm (4 in) high, secured to floor slab. Conceal fastenings by use of a floor plate.

.2 For piping systems using finishes, this protection cover is in addition to the specified pipe finish cover.

3.6 Field Quality Control

.1 The Consultant reserves the right to have protective finish coverings removed on up to 1% of all cold service and dual temperature service surfaces, fittings, flanges, couplings, valves, and ductowkr/pipeline accessories to review the installation of the insulation, at no additional cost.

.2 If insulation sealing is found to be incorrect at any one sampled location, remove the protective finish on all fittings, flanges, couplings, valves, and pipeline accessories for review, at no additional cost.

.3 Repair defective insulation sealing and replace protective coverings at no additional cost.

End of Section

DUCTWORK INSULATION
20 07 13

1 GENERAL

1.1 Scope

.1 Provide insulation, coatings, finish coverings and mechanical protection for ducts, casing, plenums, fans and associated equipment.

.2 insulation is not required on factory insulated casings and/or over acoustically lined ductwork except as otherwise shown.

.3 Conform to specification section 20 07 11 for common requirements for mechanical insulation.

1.2 Related Sections

.1 Without limiting the scope of work or applicability of other specification sections, the work under this section directly integrates with or refers to the following specification sections:

.1 20 07 11 Common Requirements for Mechanical Insulation

.2 23 31 13 Metal Ducts.

1.3 Definitions and Abbreviations

.1 Refer to Specification section 20 07 11 and as otherwise specified herein.

1.4 Applicable Codes and Standards

.1 Refer to Specification section 20 07 11.

1.5 Submittals

.1 Comply with the requirements of Specification section 20 07 11 except/and as specified herein.

.2 Submit shop drawing details for construction of insulation for outdoor ducts, including details for

.1 sloping of insulation,

.2 installation of vapour barrier/breather coats, and protective finish covering details,

.3 reinforcing sheeting for larger ducts.

2 PRODUCTS

2.1 General Requirements

.1 Insulation, adhesives, coatings, finish coverings, lagging, sealers, and tapes:

.1 maximum flame spread rating of 25 to CAN/ULC-S102/102.2 or ASTM 84,

.2 maximum smoke developed rating of 50 to CAN/ULC-S102/102.2 or ASTM 84,

.3 exception: vapor barrier mastics on mechanical services located outside of the building.

2.2 Ductwork Insulation

.1 Type D-1 (glass-fibre roll blanket):

.1 flexible glass-fibre blanket, formaldehyde-free to ASTM C1290,

.2 density: 12 kg/m^3 (0.75 pcf),

.3 service temperature with jacketed: up to 65°C (150°F),

.4 foil skim kraft ("FSK") jacket of aluminium foil reinforced with glass fibre yarn, and laminated to kraft paper,

.5 vapour transmission: maximum 0.02 perms to ASTM E96 Procedure A,

.6 listed to CAN/ULC-S102/S102.2 or ASTM E84,

.7 minimum RSI values at a mean temperature of 24°C (75°F) at the pre-installed nominal insulation thickness:

Nominal Thickness mm (in)	RSI $m^{2}\cdot°C/W$	Nominal Thickness mm (in)	RSI $m^{2}\cdot°C/W$
25 (1)	0.53	55 (2.2)	1.06
40 (1.5)	0.74	110 (4.4(	2.11

Standard of Acceptance

- Johns Manville - Microlite FSK Duct Wrap
- Owens Corning - SOFTR Duct Wrap
- Knauf Fibreglass - Atmosphere Duct Wrap

.8 Same as above except provided with a PSK (polypropylene-scrim-draft) vapour barrier jacket.

Standard of Acceptance

- Johns Manville - Microlite Black PSK

.2 Type D-2 (rigid glass fibre board):

.1 rigid glass-fibre insulation board to ASTM C612,

.2 density:

(a) indoors: 48 kg/m^3 (3.0 lb./ft^3),

(b) outdoors: 96 kg/m^3 (6.0 lb./ft^3),

.3 service temperature:

(a) unfaced board: up to 232°C (450°F),

(b) faced board: up to 65°C (150°F),

.4 foil skim kraft ("FSK") jacket of aluminium foil reinforced with glass fibre yarn, and laminated to kraft paper,

.5 vapor transmission: maximum 0.02 perms,

.6 listed to CAN/ULC-S102/S102.2 or ASTM E84,

.7 minimum RSI values at a mean temperature of 24°C (75°F) at the specified insulation thickness:

Nominal Thickness mm (in)	RSI $m^{2}\cdot°C/W$	Nominal Thickness mm (in)	RSI $m^{2}\cdot°C/W$
25 (1)	0.76	50 (2)	1.51
40 (1-1/2)	1.14	75 (3)	2.27

Standard of Acceptance

- Johns Manville - Manville 814 Spin-Glas
- Owens Corning - 703 Board
- Knauf Fiberglass - Insulating Board

.3 Type D-3 (mineral fibre board, high temperature)

.1 rigid-board, mineral fibre to ASTM C411,

.2 density: 145 kg/m^3 (9.1 lb./ft^3),

.3 service temperature: up to 700°C (1292°F),

.4 listed to CAN/ULC-S102/S102.2 or ASTM E84,

.5 not to exceed a maximum thermal conductivity at the following meant insulation temperatures:

Mean Temperature °C	Conductivity W/(m·°C)	Mean Temperature °C	Conductivity W/(m·°C)
100	0.044	700	0.158

Standard of Acceptance

- Roxul - ProRox SL 980

3 EXECUTION

3.1 Applicable Systems to be Insulated

.1 Insulate ductwork, plenums, casings and equipment in accordance with the following, and of the insulation type and thickness in accordance with Schedule 1 at the end of this specification section.

.2 Externally insulate casings and equipment:

.1 air handling units producing conditioned supply air,

.2 air handling units conveying exhaust air downstream of heat recovery devices,

.3 free-standing supply air fans (not enclosed in a casing or plenum).

.3 Externally insulate ductwork and plenums:

.1 cold and dual temperature ductwork conveying conditioned supply air including downstream of reheat coils,

.2 hot ductwork conveying conditioned supply air up to the space served but not within the space itself,

.3 unconditioned supply air ducts and plenums located in unheated spaces,

.4 return air and exhaust air ducts and plenums in unheated spaces,

.5 outside air intake ducts and plenums,

.6 exhaust air plenums at point of discharge to outside of building,

.7 exhaust air ducts and plenums downstream of heat recovery devices,

.8 exhaust air ducts between exhaust air damper and point of discharge to outside of building,

.9 mixed air plenums and ducts;

(a) for recirculating type ventilation systems without cooling coils, terminate outside air intake insulation 300 mm (12 in) downstream of mixing plenum,

.10 150 mm (6 in) entering and leaving length overlap of acoustically lined ductwork,

.11 sheet metal blank-off plates behind unused sections of air intake louvres.

.4 Externally insulate ductwork located outdoors:

.1 conditioned supply ducts,

.2 return ducts,

.3 general and process exhaust ducts between building and rooftop exhaust fan,

(a) excluding outdoor fan discharge duct,

.4 kitchen exhaust ducts between building and rooftop exhaust fan, with more than 3 m (10 ft) length of duct on roof,

(a) excluding outdoor fan discharge duct.

.5 External insulation is not required on:

.1 casings, ducts or plenums which have been lined with acoustic insulation, except as described above,

.2 ducts, plenums, casings and freestanding supply fans conveying unconditioned air,

.3 portions of intake ducts or plenums, unit casings and conditioned air plenums which are of double wall insulated construction,

.4 factory insulated flexible connectors (ducts),

.5 factory insulated air handling units,

.6 for non-recirculating make-up air type ventilation systems with a supply air temperature less than 27°C (80°F),

(a) terminate casing insulation 300 mm (12 in) downstream of heating coil or heating unit, and

(b) insulation is not required on the supply ductwork.

3.2 Installation of Rigid Insulation - Indoors

.1 Attach insulation fastener pins, studs and clips to all surfaces of ducts, casings, plenums and fans, at approximately 300 mm (12 in) centers, each direction, but not less than two (2) rows per duct. Attachment method:

.1 welded type for outdoor ducts,

.2 welded type for indoor ducts,

.3 self-adhesive base type may be used for vertical surfaces of rectangular ducts.

.2 Install rigid board insulation with joints staggered and tightly butted and no visible gaps. Install horizontal boards to overlapping over vertical boards.

.3 Secure rigid insulation by impaling on insulation fastener pins, apply speed washers and cut off excess pin length flush with speed washer. Cover washers with vapour barrier tape extending at least 50 mm (2 in) beyond the washer.

.4 Where space restrictions do not permit the use of mechanical fasteners, secure the insulation with 100% coverage of contact adhesive along with stainless steel banding on 300 mm (12 in) centers, with a band within 50 mm (2 in) of each duct corner.

.5 Neatly finish insulation at supports, protrusions, and interruptions.

.6 Apply colour matched vapour barrier tape neatly and firmly to all joints, including outside and inside corner joints, and at any exposed ends of insulation and cuts or damage to the insulation jacket. Alternatively, apply two heavy coats of applicable sealer coat and with reinforcing membrane. Extend

tape or coating at least 50 mm (2 in) on each side of joint, exposed ends of insulation or repairs to insulation jacket.

3.3 Installation of Rigid Insulation - Outdoors

.1 Secure rigid insulation for ducts and plenums located outdoors as specified for indoor rigid insulation, and as follows.

.2 Build-up and slope insulation on top of rectangular and flat oval ducts to provide drainage and prevent ponding of water on top of the duct. Without limiting the preceding, as a minimum this includes the following work:

.1 provide inserts between the duct and the duct insulation, to raise the insulation to establish the required slope,

.2 fabricate inserts from the same material as the duct insulation, shaped to establish the required slope and to provide continuous support to the insulation. Alternatively, inserts may be fabricated from layers of high-density polystyrene insulation equal to Owens Corning Celfort 300,

.3 where indicated in the following table for wider ducts, locate the peak of the insulation at the midpoint of the duct and slope the insulation to both sides of the duct,

.4 the insert rise height shall be the greater of that determined by the minimum slope and the minimum rise height as shown in the following table.

Duct Width mm (in)	Number of Slope Directions	Minimum Slope (Rise: Run)	Minimum Rise Height
≤ 600 (24)	1	1:12	50 mm (2 in)
>600 and ≤1200 (>24 and ≤48)	2	1:12	50 mm (2 in)
>1200 and ≤2400 (>48 and ≤96)	2	1:25 and reinforced	50 mm (2 in)
>2400 (96)	2	1:25 and reinforced [Note 1]	100 mm (4 in)

Notes:
[1] Refer to specification section 23 31 13 on requirements for provision of a snow and rain roof for large ducts of this size.

.5 Where required by the preceding table, reinforce the insulation as follows:

(a) cover the insulation on top of the duct with reinforcing sheeting, which is separate from any protective finish covering. Install the insulation components in layers as follows:

i) protective finish coating,

ii) reinforcement

iii) vapour barrier/air barrier

iv) insulation

v) insulation slope inserts

(b) fabricate the reinforcement sheet from minimum 0.55 mm (0.022 in.) thick galvanized steel sheet, reinforced with 20 mm (3/4 in) deep V-breaks on 300 mm (12 in) centers,

(c) place the steel sheets with the V-breaks/angles pointed down and orientated to run in the direction of the slope,

(d) size the width of the reinforcement panel to stop 25 mm (1 in) from the edge of the duct insulation, so as not to interfere with or damage the insulation vapour barrier or protective finish covering,

(e) secure the reinforcement sheet to the insulation with 100 x 100 mm (4 x 4 in) wide strips of SAWB along the top and bottom edges of the sheet (parallel to the duct run),

(f) where SAWB protective finish covering is used, provide 100 x 100 mm (4 x 4 in) wide strips of SAWB over the V-breaks before applying the protective finish covering.

.3 Where two layers of insulation are used;

.1 apply the first layer of insulation without integral vapour barrier jacket,

.2 apply the second layer of insulation with integral vapour barrier jacket,

.3 stagger the joints so that no second layer joints are within 100 mm (4 in) of an underlying first layer joint.

3.4 Installation of Flexible Insulation – Indoors

.1 On rectangular ducts 600 mm (24 in) and wider, and round ducts 450 mm (18 in) and wider, attach mechanical fastener pins, studs and clips to the bottom exterior surface of the duct at approximately 300 mm (12 in) centers, each direction, but not less than two (2) rows per duct. For round ductwork, the bottom of the duct is measured as being half the circumference of the duct.

.2 Except for flexible connectors, cut flexible insulation to required circumferential length and pull-out to final installed thickness in accordance with manufacturer instructions, and to overlap insulation 50 mm (2 in) on each lap joint, and tightly butt end edges together.

.3 For flexible connectors, apply insulation to bare (uninsulated) supply flexible connectors as follows:

.1 remove insulation to create a minimum 50 mm (2 in.) wide lap for both the longitudinal joint and the circumferential joint,

.2 cut insulation to width to provide a slightly compressed longitudinal butt joint; do not pull out insulation,

.3 secure longitudinal and circumferential joints with staples through the laps, and then apply vapour barrier tape over joints to create a vapour barrier seal,

.4 secure the ends of the insulation with vapour barrier tape to the rigid duct insulation,

.5 secure the ends of the insulation at the diffuser or grill with a Nylon tie-wrap over the diffuser/grille spigot and recover with vapour barrier tape to fully seal end of insulation to the diffuser/grille.

.4 Secure flexible insulation by:

.1 impaling on mechanical fastener pins and secure with speed washers, and either;

(a) secure insulation with stainless steel wire or stainless steel banding on 300 mm (12 in) centers, or by stapling laps, or

(b) secure insulation with 100% insulation adhesive coverage.

.5 Cut off excess pin length flush with speed washer. Cover washers with vapour barrier tape extending at least 50 mm (2 in) beyond the washer.

.6 Neatly finish insulation at supports, protrusions, and interruptions.

.7 Apply colour matched vapour barrier tape neatly and firmly to all joints, including outside and inside corner joints, and at any exposed ends of insulation and cuts or damage to the insulation jacket. Alternatively, apply two heavy coats of applicable sealer coat and with reinforcing membrane. Extend tape or coating at least 50 mm (2 in) on each side of joint, exposed ends of insulation or repairs to insulation jacket.

3.5 Installation of Flexible Insulation – Outdoors

.1 Flexible insulation is only permitted for use outdoors on round ducts, and on the rounded sides of flat-oval duct.

.2 Secure flexible insulation for round or ducts located outdoors as specified for indoor flexible insulation, and as follows.

.3 Secure insulation with stainless steel banding on 300 mm (12 in) centers.

3.6 Insulation of Fittings, Flanges and Accessories

.1 Cut and miter rigid insulation at elbows and fittings and attach to ductwork with mechanical fasteners as specified for ducts, and in addition secure insulation with 50% coverage of adhesive.

.2 At junctions between external insulation and acoustically lined ducts, overlap external insulation 300 mm (12 in) over acoustically lined ducts.

.3 Insulate flanges, support angles and standing seams with 100 mm (4 in) wide overlapping strips of insulation matching adjacent ductwork and of same thickness, and seal with two coats of breather mastic with reinforcing membrane.

3.7 Sealing Insulation - Hot Ductwork

.1 Seal hot ductwork insulation in accordance with specification section 20 07 11 and/except as specified herein.

.2 Indoor installation (except wet areas):

.1 apply vapour barrier tape to butt joints, overlapping by at least 50 mm (2 in) each side,

.2 do not tape longitudinal lap seams except as required to secure the insulation.

.3 Indoor installations – wet areas:

.1 apply vapour barrier tape to:

(a) all longitudinal lap seams and butt edges,

(b) 100% coverage of insulation at pipe joints, fittings, couplings, etc.

(c) over insulation fasteners including pins/washers and staples.

.4 Outdoor installation:

.1 apply two coasts of breather mastic with reinforcing membrane to all corners, lap edges and butt edges, overlapping joint by minimum 50 mm (2 in) each side, and to all insulation that does not have a factory installed jacket,

.2 cover mechanical fastener penetrations including staples with two coats breather mastic with reinforcing membrane.

3.8 Sealing Insulation - Cold and Dual Temperature Ductwork

.1 Seal cold and dual temperature ductwork insulation in accordance with specification section 20 07 11 and/except as specified herein.

.2 Indoor installation (except wet areas):

.1 tightly seal insulation lap seams and butt joints, using factory lap seams or field-fabricated lap seams and butt strips,

.2 apply [vapour barrier tape][vapor barrier coating with reinforcing membrane] to all corners, lap edges and butt edges, overlapping joint by minimum 50 mm (2 in) each side,

.3 cover insulation pin/washer fastener penetrations including staples with [vapour barrier tape] [vapour barrier coating with reinforcing membrane], overlapping the fasteners by a minimum of 50 mm (2 in) in all directions.

.3 Indoor installation – wet areas:

.1 tightly seal ductwork located within wet areas in accordance with the requirements for outdoor installation except use vapour barrier coatings.

.4 Outdoor installation:

.1 apply two coasts of vapour barrier mastic with reinforcing membrane to all corners, lap edges and butt edges, overlapping joint by minimum 50 mm (2 in) each side, and to all insulation that does not have a factory installed jacket,

.2 cover mechanical fastener penetrations including staples with two coats vapour barrier mastic with reinforcing membrane, overlapping the fasteners by a minimum of 50 mm (2 in) in all directions.

3.9 Insulation Finish Covering

.1 Provide insulation protective finish coverings selected in accordance with Schedule 2 at the end of this specification section and installed in accordance with specification section 20 07 11 and/except as specified herein.

.2 For self-adhesive weather barrier (SAWB) coverings;

.1 apply SAWB in accordance with manufacturer's instructions,

.2 apply 100 mm x 100 mm (4 in x 4 in) sections of SAWB over insulation pin/washer fasteners before applying SAWB over entire duct,

.3 for rectangular ducts, overlap adjacent covering surface with an overlap of not less than 100 mm (4 in) as follows:

(a) for top horizontal surfaces, overlap higher covering surface over lower surface across the duct in the direction of sloping insulation,

(b) for top horizontal surfaces, overlap covering surface in one direction along the duct run,

(c) overlap top horizontal surfaces over adjacent vertical surfaces, with an overlap of not less than 100 mm (4 in),

(d) overlap vertical surfaces over adjacent bottom horizontal surfaces, with an overlap of not less than 100 mm (4 in), and secure with an additional 50 mm (2 in) wide strip applied across the overlap seam on the underside of the duct.

.4 for round ducts,

(a) do not place an overlap within one-eighth duct diameter on each side of the duct top centerline,

(b) overlap higher layers over lower layers with an overlap not less than 100 mm (4 in).

3.10 Painted Ductwork

.1 Finish ductwork with fabric finish for the following systems:

.1 ductwork inside of boiler and refrigeration rooms,

.2 ductwork inside of other mechanical service rooms,

.3 exposed ductwork in public areas including,

.2 Prime and top-coat painting is provided under separate Division of the Work.

3.11 Mechanical Damage Protection - Indoors

.1 Protect exposed insulated ductwork from floor level up to a height of 1200 mm (4 ft) above the floor with 0.9 mm (20 ga.) galvanized steel jacket, with riveted longitudinal seams and mechanically fastened to the floor with countersunk stainless steel screws.

.2 Where waterproof floor sleeves are required, the floor sleeve may be combined with this requirement.

3.12 Insulating and Finishes Tables

.1 The insulating and finishing tables follow:

.1 Schedule 1 - Ductwork, Insulation Type and Thickness

.2 Schedule 2 - Ductwork Insulation Protective Finishes.

Schedule 1:
Ductwork Insulation Type and Thickness

Duct Air Service Temperature	Location	Equipment Description	Insulation Type	Insulation Thickness mm (in) [Note 1]
5°C to 65°C (40 to 150°F)	Indoors	Air handling unit casings and plenums, Free standing supply fans	D-2	50 (2)
		Rectangular ducts and plenums – exposed or concealed	D-2	25 (1)
		Rectangular ducts - concealed	D-1	25 (1)
		Round and Oval ducts - exposed		
	Unconditioned Space	Rectangular ducts and plenums	D2	40 (1-1/2)
			D1	55 (2.2)
		Round and Oval ducts	D1	55 (2.2)
	Outdoors	Rectangular and Oval – Supply, Return	D-2	75 (3)
		Round and Oval – Supply, Return	D-1	110 (4.4) [Note 2, 3]
		Rectangular – Process and General Exhaust	D-2	1 (25)
		Round – Process and General Exhaust	D-1	1.5 (40)
		Rectangular - Kitchen Exhaust	D-3	50 (2)

…. continued on next page

Table 1: (continued)
Ductwork Insulation Type and Thickness

Duct AIr Service Temperature	Location	Equipment Description	Insulation Type	Insulation Thickness mm (in) [Note 1]
-40 to +40°C (-40 to 104°F)	Indoors	Plenums and Casings – Air Intakes	D2	Two layers 50 (2)
-10 to +40°C (14 to 104°F)	Indoors	Plenums and Casings – Exhaust	D2	50 (2)
5 to 16°C	Indoors	Drain Pans	D2	1 (25)

Notes:
[1] Type D-1 flexible duct insulation thickness is "out of box" before installation.
[2] Insulation thickness may be provided by two layers, so that the total insulation thickness "out of the box" is equal to or greater than the specified thickness.
[3] Flexible duct may be used only on the rounded sides of flat oval ducts.

Schedule 2:
Ductwork Insulation Protective Finish Coverings

Location	Exposed/ Concealed	System/ Space	Protective Finish Covering
Indoors	Concealed	All	None
	Exposed	Service Rooms	Fabric
		Public Spaces	Fabric

End of Section

PIPING INSULATION
20 07 19

1 GENERAL

1.1 Scope

.1 Provide insulation, coatings, finishing coverings and mechanical protection of piping, valves, fittings, and pipeline accessories.

.2 Conform to Specification section 20 07 11 for common requirements for mechanical insulation.

.3 Provide fire rated insulation on piping as shown, including fire protection standpipes. Coordinate with the contractor under Division 21 for location and extent of standpipes to be protected.

1.2 Related Sections

.1 Without limiting the scope of work or applicability of other Specification sections, the work under this section directly integrates with or refers to the following Specification sections:

.1 20 05 29 Common Hanger and Support Requirements for Piping

.2 20 07 11 Common Requirements for Mechanical Insulation

1.3 Definitions and Abbreviations

.1 Refer to Specification section 20 07 11 and as otherwise specified herein.

1.4 Applicable Codes and Standards

.1 Refer to Specification section 20 07 11.

1.5 Submittals

.1 Comply with the requirements of Specification section 20 07 11 except/and as specified herein.

.2 Submit a shop drawing illustrating the method of insulation of pipe fittings, flanges and couplings for Cold and Dual Temperature piping. Submittal to include:

.1 type of insulation material being used (mitered preformed piping insulation sections, insulation inserts or blanket); this may vary based on pipe size,

.2 for insulation inserts and blanket methods, indicate the insulation thickness and number of layers required for each pipe size, the adjacent pipe insulation thickness, and the final compressed thickness of the fitting insulation,

.3 method and shop details of application of vapour barrier, including details for sealing of PVC jackets.

.3 When requested by Consultant, submit full size mock-up examples of pipe fitting insulation for Cold and Dual-Temperature piping, complete with selected vapour barrier method. Submittal to include one elbow and one Tee based on pipe size as selected by Consultant.

2 PRODUCTS

2.1 General Requirements

.1 Insulation, adhesives, coatings, finish coverings, lagging, sealers, and tapes:

.1 maximum flame spread rating of 25 to CAN/ULC-S102/102.2 or ASTM 84.

.2 maximum smoke developed rating of 50 to CAN/ULC-S102/102.2 or ASTM 84.

.3 exception: vapor barrier mastics on mechanical services located outside of the building

2.2 Pipe Insulation

.1 Type P-1 (molded glass-fiber):

.1 factory molded rigid glass-fiber to ASTM C547,

.2 nominal pipe size: NPS 24 and smaller,

.3 service temperature, jacketed: -18°C (0°F) to 65°C (150°F),

.4 jacket: all-service-jacket (ASJ) of white kraft paper bonded to aluminum foil, reinforced with glass fiber yarn, and laminated to an interior kraft paper face,

.5 vapor transmission: maximum 0.02 perms to ASTM E96,

.6 listed to CAN/ULC-S102/S102.2 or ASTM E84,

.7 reduced environmental impact feature of either: bio-based binders, 25% minimum recycled glass content, and/or paper-free ASJ jacket material,

.8 not to exceed a maximum thermal conductivity at the following meant insulation temperatures:

Mean Temperature °C	Conductivity W/(m·°C)	Mean Temperature °C	Conductivity W/(m·°C)
24	0.034	93	0.040

Standard of Acceptance

- Johns Manville - fig. Micro-Lok HP (25% recycled content)
- Owens Corning - fig. Fiberglas Evolution (paper-free ASJ)
- Knauf Fiberglass - fig. Earthwool 1000 Ecose (bio-based binders)

.2 Type P-2 (semi-rigid glass-fiber roll):

.1 glass fiber semi-rigid roll insulation for tanks and pipes, to ASTM C1393,

.2 glass-fiber oriented to maintain uniform thickness when installed on round surfaces,

.3 density: 40 kg/m^3 (2.5 lb./ft^3),

.4 nominal pipe size: NPS 14 and larger,

.5 service temperature with jacket: up to 65°C (150°F),

.6 jacket: all-service-jacket (“ASJ”) of white kraft paper bonded to aluminum foil, reinforced with glass fiber yarn, and laminated to an interior kraft paper face,

.7 vapor transmission: maximum 0.02 perms to ASTM E96,

.8 listed to CAN/ULC-S102/S102.2 or ASTM E84,

.9 not to exceed a maximum thermal conductivity at the following meant insulation temperatures:

Mean Temperature °C	Conductivity W/(m·°C)	Mean Temperature °C	Conductivity W/(m·°C)
24	0.035	93	0.046

Standard of Acceptance

- Johns Manville - fig. Micro-Flex Pipe and Tank Wrap
- Owens Corning - fig. Fiberglas Pipe and Tank
- Knauf Fibreglass - fig. KwikFlex Pipe and Tank

.3 Type P-3 (molded mineral fiber):

.1 factory molded mineral fiber to ASTM C547,

.2 density: 128 kg/m^3 (8.0 lb./ft^3),

.3 nominal pipe size: NPS 30 and smaller,

.4 service temperature: up to 650°C (1200°F),

.5 jacket: integral foil skrim-kraft (FSK) jacket of aluminium foil reinforced with glass fiber yarn, and laminated to kraft paper,

.6 listed to CAN/ULC-S102/S102.2 or ASTM E84,

.7 not to exceed a maximum thermal conductivity at the following meant insulation temperatures:

Mean Temperature °C	Conductivity W/(m·°C)	Mean Temperature °C	Conductivity W/(m·°C)
38	0.036	149	0.049

Standard of Acceptance

- Rockwool - fig. ProRox PS 960
- Johns Manville - fig. MinWool-1200
- Industrial Fiber-Tek - fig. IFT 1200 Pipe

.4 Type P-4 (molded mineral fiber, high temperature):

.1 factory molded mineral fiber, high temperature, to ASTM C547,

.2 density: 145 kg/m^3 (9.1 lb./ft^3),

.3 nominal pipe size: NPS 6 and larger,

.4 service temperature: up to 760°C (1400°F),

.5 jacket: none,

.6 compressive strength: 53 kPa (8 psi) at 10% compression,

.7 listed to CAN/ULC-S102/S102.2 or ASTM E84,

.8 not to exceed a maximum thermal conductivity at the following meant insulation temperatures:

Mean Temperature °C	Conductivity W/(m·°C)	Mean Temperature °C	Conductivity W/(m·°C)
38	0.039	149	0.049

Standard of Acceptance

- Rockwool - fig. ProRox PS 980

.5 Type P-5 (cellular glass):

.1 fabricated pipe and fitting shapes, cellular glass to ASTM C552,

.2 density: 120 kg/m^3 (7.5 lb./ft^3),

.3 minimum compressive strength perpendicular to pipe surface: 620 kPa (90 psi),

.4 nominal pipe size: NPS 16 and smaller,

.5 service temperature: -268°C (-450°F) to 480°C (900°F),

.6 minimum compressive strength perpendicular to pipe surface: 620 kPa (90 psi),

.7 jacket: none,

.8 listed to CAN/ULC-S102/S102.2 or ASTM E84,

.9 not to exceed a maximum thermal conductivity at the following meant insulation temperatures:

Mean Temperature °C	Conductivity W/(m·°C)	Mean Temperature °C	Conductivity W/(m·°C)
10	0.040	24	0.042

Standard of Acceptance

° Owens Corning - fig. Foamglas

.6 Type P-6 (elastomeric foam plastic):

.1 flexible elastomeric closed cell foam, tubular with self-sealing seams, to ASTM C534,

.2 nominal pipe size: NPS 2 and smaller,

.3 service temperature: -183°C (-297°F) to 82°C (183°F),

.4 jacket: none,

.5 manufacturer specific sealer/adhesive,

.6 listed to CAN/ULC-S102/S102.2 or ASTM E84,

.7 not to exceed a maximum thermal conductivity at the following meant insulation temperatures:

Mean Temperature °C	Conductivity W/(m·°C)	Mean Temperature °C	Conductivity W/(m·°C)
24	0.035	32	0.037

Standard of Acceptance

° Armacell - fig. AP Armaflex SS Pipe Insulation
° KFlex USA - fig. Insul-Tube

.7 Type P-7 (calcium silicate):

.1 fabricated pipe and fitting shapes, calcium silicate, asbestos-free, to ASTM C533 Type I,

.2 density: 232 kg/m^3 (14.5 lb./ft^3),

.3 minimum compressive strength perpendicular to pipe surface: 620 kPa (90 psi),

.4 integral corrosion inhibitor to reduce under insulation corrosion,

.5 nominal pipe size: NPS 4 to NPS 24,

.6 service temperature: 20 to 649°C (70 to 1200°F).

.7 jacket: none,

.8 listed to CAN/ULC-S102/S102.2 or ASTM E84,

.9 non-combustible to CAN/ULC-S114 or does not flame, glow, smolder or smoke when tested to ASTM C411.

.10 not to exceed a maximum thermal conductivity at the following meant insulation temperatures:

Mean Temperature °C	Conductivity W/(m·°C)	Mean Temperature °C	Conductivity W/(m·°C)
38	0.050	93	0.056

Standard of Acceptance

° Johns Manville - fig. Thermo-12 Gold

.8 Type P-8 (removable high-temperature insulated jackets):

.1 custom fabricated, removable/reusable high temperature insulated jackets for hot surfaces,

.2 suitable for indoor and outdoor use,

.3 process surface temperature: as shown in Schedule A,

.4 maximum outer jacket touch-safe temperature protection: 95°C (203°F),

.5 jacket: silicone impregnated glass-fiber, for temperatures up to 260°C (500°F),

.6 insulation: mineral or fiberglass insulation suitable for system operating temperature,

.7 internal liner: silicone impregnated fiberglass fabric, or stainless steel knitted wire mesh,

.8 fasteners:

(a) stainless steel laced wire, for pipe sections,

(b) stainless steel mesh straps with buckle rings, for valves, strainers, meters and similar pipeline accessories,

.9 metal identification tag, referenced equipment served.

Standard of Acceptance

° Firwin Corporation
° Thermohelp Canada Inc.

.9 Type P-9 (fire-rated pipe insulation):

.1 foil encapsulated, fire resistant insulation blanket,

.2 listed to CAN/ULC-S144 for two hour fire resistance rated ducts,

.3 manufacturer’s supporting documentation for protection of piping for fire protection, for a period of two hours when exposed to temperatures up to 200°C (392°F) in a sprinklered building,

.4 listed to CAN/ULC-S102.2.

Standard of Acceptance

° Thermal Ceramics – fig. Firemaster FastWrap XL
° 3M - fig. Fire Barrier Duct Wrap 615 System

.10 Type P-10 (ceramic wool)

.1 alkaline earth silicate fibers (AES), roll insulation for tanks and pipes, to ASTM C892,

.2 free of binders and lubricants,

.3 density: 96 kg/m^3 (6 lb./ft^3),

.4 continuous service temperature: 1000°C (1830°F),

.5 jacket: none,

.6 non-combustible,

.7 no requirement for labelling under the Global Harmonized System for classification labels for chemicals,

.8 not to exceed a maximum thermal conductivity at the following mean insulation temperatures:

Mean Temperature °C	Conductivity W/(m·°C)	Mean Temperature °C	Conductivity W/(m·°C)
800	0.21	1000	0.29

Standard of Acceptance

° Morgan Thermal Ceramics - fig. Superwool Plus

.11 Type P-11 (pipe fitting blanket insulation):

.1 Glass-fiber blanket, faced and unfaced,

.2 maximum pipe service temperature limit:

(a) faced: 121ºC (250ºF),

(b) unfaced: 177ºC (350ºF),

.3 flexible glass-fiber blanket, formaldehyde-free to ASTM C1139,

.4 density: 16 kg/m^3 (1.0 lb./ft^3),

.5 jacket: FSK or PSK jacket, unless otherwise specified as unfaced,

.6 vapour transmission (jacketed insulation only): 0.02 perms or less,

.7 listed to CAN/ULC-S102/S102.2,

.8 compressed thermal conductivity: 0.058 W/mºC @ 93ºC (0.40 BTU•in/(hr•ft2•ºF) @ 200ºF)

Standard of Acceptance

° Knauf Fibreglass - Atmosphere Duct Wrap

.12 Type P-12 (pipe fitting insulation insert)

.1 manufactured pre-cut shaped inserts specifically formed for insulation of pipe fittings,

.2 maximum pipe service temperature limit: 454ºC (850ºF),

.3 flexible glass-fiber blanket, formaldehyde-free to ASTM C547,

.4 density: 16 kg/m^3 (1.0 lb./ft^3),

.5 service temperature: minimum -18 to 454ºC (0 to 850ºF),

.6 jacket: none (unfaced),

.7 vapour transmission: not applicable,

.8 listed to CAN/ULC-S102/S102.2,

.9 compressed thermal conductivity: 0.058 W/m•°C @ 150•°C (0.40 BTU•in/(hr•ft2••°F) @ 300•°F)

Standard of Acceptance

° Johns Manville - fig. Zeston Hi-Lo Temp Insulation Inserts

2.3 Pipe Support Insulation Inserts

.1 General:

.1 molded or fabricated high-density molded insulation inserts for pipe supports.

.2 Type P-21 – factory insulated shields:

.1 factory assembled high-density insulation insert with insulation shield,

.2 nominal pipe size: NPS 1/2 to NPS 30,

.3 service temperature: -40 to +125°C (-40 to +275°F),

.4 insulation:

(a) rigid phenolic foam insulation, to ASTM C1126, Gr.2, Type III,

(b) thickness: to match thickness of adjacent pipe insulation,

(c) nominal density:

i) NPS 10 and under: 60 kg/m^3 (3.75 lb./ft^3),

ii) NPS 12 to 30: 80 kg//m^3 (5.0 lb./ft^3),

(d) minimum compressive strength perpendicular to pipe surface: 620 kPa (90 psi),

(e) pipe circumference coverage: 360°,

(f) insulation length: to extend at least 38 mm (1-1/2 in.) past each end of the integrated shield.

(g) vapour barrier jacket: three-ply composite polyester film and aluminium foil with self-securing lap-seal, with zero perm rating,

(h) listed to CAN/ULC-S102/S102.2 or ASTM E84.

.5 insulation shield:

(a) Z275 (G90) coating-weight galvanized steel to ASTM A653, with formed ribs to center clevis hanger or strut,

(b) edges flared or hemmed to prevent damage to insulation,

(c) adhered to bottom of insulation insert,

(d) width: covering 180° arc of insulation,

(e) length and thickness: as required to not exceed the compression strength of the insulation insert when supporting piping filled with water based on the maximum pipe support spans as defined in MSS SP-58.

.6 heavy-duty insulation shield (designation P-21HD):

(a) as specified above for insulation shield except/and as follows,

(b) shield thickness: 2.75 mm (12 ga),

(c) with structural steel plate welded to bottom of shield.

.7 sliding protection shield (designation P-21SL)

(a) as specified above for insulation shield except/and as follows,

(b) secondary shield located below the primary protection shield, with PTFE layer bonded to the upper surface of the secondary shield,

(c) designed to allow relative movement between the primary shield and secondary shield.

Standard of Acceptance

- Buckaroos Inc. - fig. CoolDry Insulated Saddles
- Buckaroos Inc. - fig. CoolDry Heavy Duty Insulated Saddles
- Buckaroos Inc. - fig. CoolDry Sliding Insulated Saddles

.3 Type P-22 - cellular glass:

.1 cellular glass to ASTM C552,

.2 nominal pipe size: NPS 1-1/2 to NPS 24,

.3 density: nominal 120 kg/m^3 (7.5 lb./ft^3),

.4 minimum compressive strength perpendicular to pipe surface: 620 kPa (90 psi),

.5 service temperature: -73ºC to+121ºC (-100ºF to 250ºF),

.6 listed to CAN/ULC-S102/S102.2 or ASTM E84.

Standard of Acceptance

- Owens Corning - fig. Foamglas

.4 Type P-23 - calcium silicate:

.1 calcium silicate to ASTM C533 Type I, with integral corrosion inhibitor to reduce under insulation corrosion, asbestos-free,

.2 nominal pipe size: NPS 1-1/2 to NPS 24,

.3 density: nominal 232 kg/m^3 (14.5 lb./cu ft),

.4 minimum compressive strength perpendicular to pipe surface: 620 kPa (90 psi),

.5 service temperature: 20 to 649°C (70 to 1200°F),

.6 thermal performance: 0.058 W/m/C @ 149°C (0.40 btu/hr/in/sq ft/F @ 300°F).

Standard of Acceptance

- Johns Manville - fig. Thermo-12 Gold

3 EXECUTION

3.1 General

.1 Where repairs are made to existing insulated piping due to connections of new piping work, the insulation thickness for the existing piping is permitted to match the existing insulation nominal thickness, provided the extent of new insulation does not exceed a length of 1000 mm (39 in).

3.2 Applicable Systems – Hot piping

.1 Insulate Hot piping systems including pipe, valves, fittings, and pipeline accessories in accordance with the Schedule A at the end of this Specification section.

.1 Table 1A for all piping except engine combustion gas exhaust piping,

.2 Table 1B for engine combustion gas exhaust piping.

.2 Insulate condensate piping in accordance with the same criteria as its associated steam system.

.3 Insulate inlet and discharge piping for safety valves or safety relief valves that is located;

.1 less than 2.4 m (8 ft) above a floor or work surface, or

.2 within 1 m (39 in) horizontally of, and less than 2.4 m (8 ft) above, an elevated work surface.

3.3 Applicable Systems - Cold and Dual Temperature Piping

.1 Insulate Cold and Dual temperature piping systems including pipe, valves, fittings, and pipeline accessories in accordance with Schedule B at the end of this Specification section.

.2 Insulate the following drainage services or equipment:

.1 storm water drainage systems in the following locations:

(a) roof drain bodies,

(b) rainwater leaders (storm water piping) from roof drain bodies to the floor level below the drain body,

(c) rainwater leaders in or above data and telecommunication rooms,

(d) rainwater leaders in or immediately above wet areas.

.2 sanitary piping in the following locations:

(a) horizontal sanitary drainage piping NPS 3 and larger in ceiling spaces,

(b) sanitary drainage piping in or above wet areas,

(c) sanitary drainage piping in or above data and telecommunication rooms,

(d) exposed sanitary drainage piping in service tunnels,

(e) exposed sanitary drainage piping serving spaces located in a parking garage,

(f) and where shown on drawings.

3.4 Insulating Hot Piping

.1 Insulate straight pipe sections by staggering adjacent longitudinal seams 1/4 turn for each butt joint.

.2 For insulation having ASJ or FSK jackets, secure longitudinal flaps by either:

.1 use of press-on tacks or stapling the lap flap on 75 mm (3 in) centers, or

.2 by use of self-sealing lap adhesive strips, or

.3 with the use of colour-matched vapour barrier tape.

.3 Secure insulation that does not have an integral ASJ or FSK jacket by use of stainless steel wire or bands at not less than 300 mm (12 in) centers, or by a continuous wire helix on the same center spacing.

.4 For type P-2 and P-4 insulation, or where the required pipe insulation thickness is greater than 50 mm (2 in);

.1 provide two layers of approximately equal insulation thickness such that the total thickness is as specified,

.2 install straight pipe sections by staggering adjacent section longitudinal seams 1/4 turn for each section, and stagger butt joints between the first layer and second layer by at least 1/4 of the insulation section length, and

.3 secure the first layer of insulation with stainless steel wire or bands on 300 mm (12 in.) centers and secure the second layer with band straps on 300 mm (12 in) centers.

.5 Secure butt joints with vapour barrier tape or insulation butt strips.

.6 For piping service temperatures greater than 121°C (250°F);

.1 apply insulation finishing cement at all exposed edges of insulation where the insulation is interrupted by valves, connections to other equipment, and piping supports and anchors.

3.5 Insulating Cold and Dual Temperature Piping

.1 Insulate straight pipe sections by staggering adjacent longitudinal seams 1/4 turn for each butt joint.

.2 For insulation having ASJ or FSK jackets, secure longitudinal flaps by either:

.1 use of press-on tacks or stapling the lap flap on 75 mm (3 in) centers, or

.2 by use of self-sealing lap adhesive strips, or

.3 with the use of colour-matched vapour barrier tape.

.3 Except for type P-6 insulation, secure insulation that does not have an integral ASJ or FSK jacket by:

.1 use of 12 mm (1/2 in.) wide reinforced filament tape on approximately 150 mm (6 in.) centers for piping NPS 4 and smaller, and use stainless steel banding on 225 mm (9 in.) centers for piping NPS 6 and larger, and

(a) apply an all-service-jacket with 100% coverage of adhesive suitable for the insulation material, with longitudinal and butt seams having a 50 mm (2 in) overlap, and seal the laps with vapour barrier adhesive/ coating, or

(b) apply a heavy brush coat of vapour barrier coating at the rate of 1.2 L/m^2 (2.5 Imp.gallon per 100 ft^2), embed a layer of reinforcing membrane, and then applying a second heavy brush coat of vapour barrier coating at the rate of 1.0 L/m^2 (2.1 Imp. gallon per 100 ft^2).

.4 For type P-2 insulation, or where the required pipe insulation thickness is greater than 50 mm (2 in);

.1 provide two layers of approximately equal thickness such that the total thickness is as specified,

.2 install straight pipe sections by staggering adjacent section longitudinal seams 1/4 turn for each section, and stagger butt joints between the first layer and second layer by at least 1/4 of the insulation section length, and

.3 secure the first layer of insulation with stainless steel wire on 300 mm (12 in.) centers and secure the second layer with stainless steel banding on 225 mm (9 in) centers.

.5 For type P-6 insulation:

.1 secure insulation with field-applied adhesive or self-adhesive longitudinal edge seams and apply vapour barrier adhesive/sealant to butt joints.

.6 Secure butt joints for all insulation types with vapor barrier tape, unless otherwise sealed using vapour barrier adhesives and coatings.

.7 Expansion joints:

.1 provide an insulation expansion joints for straight pipe runs greater than 15 m (50 ft) and at every 15 m (50 ft) length thereafter,

.2 expansion joint consisting of 50 mm (2 in) wide type P-11 insulation for full depth of pipe insulation. Seal adjacent pipe insulation ends with vapor barrier coating.

.8 Where pipe anchors are attached to chilled water piping or Dual Temperature piping;

.1 cover exposed ends of cut insulation with reinforced vapour barrier coating, with the fabric and coating overlapping by at least 50 mm (2 in.) onto the pipe anchor,

.2 insulate the pipe anchor with type P- 6 insulation (in round or equivalent sheet form) to a distance equal to 10 times the largest outside dimension of the anchor structure element, but not less than 150 mm (6 in) beyond pipe insulation outer surface.

.9 Notwithstanding the method of securing the insulation, all seams and joints are to be provided with a vapor barrier seal as specified herein.

3.6 Insulation of Flanges and Groove Couplings

.1 Unless otherwise specified, build-up layers of blanket insulation for flanges and groove couplings with multiple insulation layers so that the installed insulation in its compressed thickness is not less than the insulation thickness of the adjoining pipe.

.1 for P-11 blanket insulation, compress each layer by 25% of uncompressed thickness,

.2 for P-12 preformed inserts, compress each layer by 50% of uncompressed thickness.

.2 Insulate flanges and grooved as follows:

.1 butt pipe-run insulation to each side of flange or grooved-joint coupling,

.2 use oversized pre-molded insulation to build-up rigid insulation blocking on each side of flange or grooved-joint coupling to a height equal to the height of the flange or coupling, with a width dimension same as pipe insulation thickness,

.3 apply rigid or blanket insulation layer over the top of the flange or coupling to a thickness equal to pipe insulation thickness.

.3 Secure insulation with stainless steel wire, stainless steel bands, or vapour barrier tape.

3.7 Insulation of Pipe Fittings

.1 Insulate pipe fittings including but not limited to elbows and tees.

.2 Unless otherwise specified, build-up layers of insulation inserts or blanket insulation for pipe fittings with multiple insulation layers so that the installed insulation in its compressed thickness is not less than the insulation thickness of the adjoining pipe.

.3 NPS 1½ and smaller (Type P-1 to P-4 insulation:

.1 miter cut insulation to create tight fit,

.2 where PVC covers are used, trim backside of insulation on elbows to suit cover but do not reduce total thickness less than that of adjacent pipe insulation,

.3 secure fitting insulation with vapour barrier tape.

.4 NPS 2 and larger (type P-1 to P-4 insulation):

.1 **METHOD 1 – Mitered Rigid Insulation:**

(a) neatly cut rigid pre-formed pipe insulation in multiple-mitered sections to follow the curve of the pipe fitting,

(b) number of mitered segments to be sufficient to maintain thickness of insulation around throat of elbow or tee,

(c) secure insulation without an ASJ or FSK jacket with stainless steel wire,

(d) secure insulation with ASJ or FSK jacket with vapour barrier tape, covering all seams.

.2 METHOD 2 – Preformed rigid fitting insulated fittings:

(a) use matching preformed rigid fitting insulation units,

(b) secure fitting insulation using stainless steel wire or vapor barrier tape.

.3 METHOD 3 – flexible inserts or blanket insulation:

(a) for grooved joints and flanges: install a collar of oversized rigid pipe insulation over the end of the pipe-run insulation adjacent to the grooved coupling or flange, to achieve an overall insulation height equal to the adjacent coupling or flange height,

(b) wrap fittings with type P-11 or P-12 insulation, neatly applied in sufficient layers to build up total compressed insulation thickness to match adjacent pipe-run insulation thickness,

(c) where multiple insulation layers are used for Type P-11 insulation blanket, only the outer layer may have an integral vapour barrier jacket.

(d) secure insulation inserts by overlapping ends under the throat of the fitting and secure with vapour barrier tape,

(e) secure unfaced insulation blanket with stainless steel,

(f) secure jacketed insulation blanket with vapour barrier tape.

.5 Where type P-5 or P-7 insulation is used;

.1 insulate fittings, flanges, and couplings as described above except use factory made rigid insulation fittings or fabricate mitered fittings, of the same material as the pipe-run insulation.

.6 Where type P-6 insulation is used;

.1 insulate fittings, flanges, and couplings as described above except using type P-6 insulation and adhere insulation to fitting, flange, or coupling with 100% coverage of adhesive,

.2 do not adhere insulation across bolted connections - insulate on each side of connection and add additional insulation layer across connection and fix in place with bands and seal joints.

3.8 Insulation of Pipeline Accessories – Hot, Cold and Dual Temperature Piping

.1 Insulate pipeline accessories depending on service temperature:

.1 valves,

.2 strainers,

.3 pressure reducing valves,

.4 control valves,

.5 meters,

.6 steam separators.

.2 Insulate pipeline accessories for Hot piping systems with service temperatures greater than 93°C (200°F) as follows:

.1 insulated with type P-8 removable/reusable fitted insulation covers, designed to allow free movement of valve actuator,

.2 insulation is not required at this service temperature range for drain valves, blowoff/blowdown valves, and drip caps or plugs.

.3 Insulate pipeline accessories for Hot piping systems with service temperature greater than 60°C (140°F) and up to 93°C (200°F) or less, as follows:

.1 insulated with:

(a) type P-8 removable/reusable fitted insulation covers designed to allow free movement of valve actuator, or

(b) insulated with fitted pipe insulation segments, or oversized sections of insulation arranged to permit its removal and reinstallation, or

(c) tightly placed flexible insulation and covered with PVC fitting covers.]

.2 insulation is not required at this service temperature range for drain valves, drain caps/plugs, and for pipeline accessories NPS 1 and smaller.

.4 Insulation of pipeline accessories is not required for Hot piping with service temperatures less than 60°C (104°F).

.5 Insulate pipeline accessories for chilled water, liquid refrigerant, and Dual Temperature heating/cooling systems as follows:

.1 METHOD 1 - Detachable insulated box type:

(a) fabricate detachable insulated box to encapsulate the pipeline accessory,

(b) materials: embossed aluminum or stainless steel enclosure, with minimum 25 mm (1 in.) thick internal insulation of board version of type P-6 insulation,

.2 METHOD 2 – Type P-6 insulation:

(a) for accessories NPS 8 and larger,

(b) install one layer of 25 mm (1 in) blanket version of type P-6 insulation adhered to pipeline accessories with 100% adhesive coverage,

(c) seal all joints with manufacturers sealant, including the joint between P-6 insulation and adjacent piping insulation,

(d) at locations requiring access, extend insulation to create a collar around bolted connection, and install a compression fit piece of insulation to cover equipment.

.3 METHOD 3 – Fitted insulation:

(a) for accessories NPS 4 and smaller,

(b) insulate with fitted pipe insulation or mitered blocks with all joints sealed with two coats of vapour barrier coating complete with reinforcing membrane.

.6 Insulate accessories for all other Cold piping systems as follows:

.1 insulate with flexible blanket insulation, fitted pipe insulation inserts or mitered block of same material and thickness of adjacent piping and seal all joints with two coats of vapour barrier coating complete with reinforcing membrane or vapour barrier tape.

.7 At locations requiring access including valve handles, valve actuators, drain valves, etc. cut-back insulation and seal exposed edges.

3.9 Additional Requirements for Insulation of Engine Combustion Gas Exhaust Piping

.1 In addition to the general requirements for Hot piping insulation installation specified herein, insulate field-fabricated engine combustion gas exhaust piping systems as follows.

.2 For type P-10 insulation as 1st layer and type P-3 insulation as the 2nd layer:

.1 install the 1st layer of insulation with at least 50 mm (2 in) longitudinal overlap;

(a) do not stretch-out the insulation.

(b) secure with stainless steel wire in a double helix at approximately 225 mm (9 in.) on centers and at an incline of approximately 45°,

.2 install the 2nd layer of insulation by compressing slightly the 1st layer and secure the 2nd layer insulation with stainless steel bands at not more than 225 mm (9 in) spacing,

.3 For type P-7 insulation as both 1st and 2nd layers:

.1 do not use adhesive to attach the insulation to the equipment,

.2 secure both layers with stainless steel wire in a double helix at approximately 225 mm (9 in.) on centers and at an incline of approximately 45°,

.4 Provide type P-23 (calcium silicate) high-density insulation inserts at hanger support locations where clevis hanger or trapeze hangers are used.

.5 For straight piping runs greater than 15 m and at every 15 m length thereafter;

.1 provide an insulation expansion joint consisting of 50 mm (2 in) wide type P-10 insulation for full depth of both insulation layers,

.2 where insulation expansion joint is concealed, secure with a stainless steel cover jacket that extends at least 50 mm (2 in) on each side of the insulation expansion joint.

3.10 Additional Requirements for Insulation of Drainage Systems

.1 In addition to the general requirements for Cold and Dual Temperature piping insulation specified herein, insulate the underside of roof drain hoppers with Type P-11 insulation except with FSK or PSK jacket and seal all joints with two coats of vapour barrier coating complete with reinforcing membrane, or, seal with vapour barrier tape.

3.11 Additional Requirements for Insulation of MRI Quench Vent Piping

.1 In addition to the general requirements for Cold and Dual Temperature piping insulation specified herein, insulate MRI quench vent piping in accordance with the following supplemental requirements:

.1 insulate piping located inside the building,

.2 insulate piping located outdoors as follows:

(a) insulate vertical vent piping to a height of 2.8 m (8 ft) above the roof or ground level.

.3 horizontal vent piping and discharge head are not required to be insulated.

.4 provide two layers of insulation of applicable thickness as specified in the article Schedules at the end of this Section,

.5 stagger insulation joints between the layers so that no joint in one layer aligns with a joint on the other layer,

.6 provide vapour barrier sealing on the first (inner) layer using reinforced vapour barrier coating,

.7 cover the second insulation layer with jacket material as specified in the article Schedules at the end of this section.

.8 install insulation over expansion joints to allow removal to permit inspection of the expansion joint,

3.12 Insulation Protection at Pipe Supports

.1 Installation of pipe insulation saddle protection for Hot piping:

.1 pipe saddles provided under Specification section 20 05 29,

.2 insulate the interior void spaces of pipe saddles, using the same material as adjacent pipe insulation,

.3 butt insulation up to sides and end of pipe saddle and leave bottom surface of saddle exposed for direct contact with pipe support.

.2 Installation of pipe insulation shield protection for hot and cold piping:

.1 pipe insulation shields are provided under Specification section 20 05 29 except where specified herein as a factory assembled insulation insert and shield.

.2 provide high-density insulation inserts at pipe hanger locations as specified herein and in accordance with Specification 20 05 29 subject to fluid service temperature and pipe size,

(a) insert length: at least 50 mm (2 in) longer than the shield length to allow application of vapour barrier sealant or tape, but not less than the following:

Pipe Size NPS	Insulation Insert Length mm (in)
1 ½ to 4	400 (16)

6	550 (22)
8 - 24	700 (28)

(b) arc width: one-half of the pipe diameter for type P-22and P-23 inserts,

.3 fabricate the high-density inserts so their thickness is the same as the adjacent installed pipe-run insulation, with finished surface thickness within +3 mm/-0 mm (+1/8 in / -0 in) of adjacent pipe insulation thickness,

.4 for cold water piping, apply insulation cover and vapour barrier sealant to fully cover and seal the high-density insert, and to overlap the adjacent pipe-run insulation by at least 50 mm (2 in) on all edges,

.5 install the insulation shield between the finished insulation and the support pipe; the pipe support is sized for the outside dimension of pipe and insulation.

3.13 Insulation at Floor and Wall Openings

.1 Extend pipe insulation at full required thickness through floor and wall openings for Hot, Cold and Dual Temperature piping. Vapour barrier jackets for Cold and Dual Temperature piping are to extend unbroken through the wall or floor penetration. Finish coverings for Hot piping with service temperatures not exceeding 93°C (200°F) may terminate on each side of the opening.

.2 Reduction in insulation thickness through floor or wall openings is not permitted except by prior approval of Consultant on specific exceptional case basis;

.1 exception: Hot piping with service temperature not exceeding 93°C (200°F) may be reduced by one-half the required thickness stated in Schedule A1 through wall and floor penetrations, but such thickness reduction shall not extend more than 25 mm (1 in.) on each side of the opening.

.3 For penetrations through fire rated separations, provide finishes in accordance with fire stopping manufacturer's listing requirements.

.4 For outdoor piping passing through exterior walls or roof, terminate mastic lagging at outside face of sleeve and provide storm flashing to protect insulation, caulked to jacket and to building structure.

3.14 Sealing of Insulation – Hot Piping

.1 Seal hot piping insulation in accordance with Specification section 20 07 11 and/except as specified herein.

.2 Indoor installation (except wet areas):

.1 except where separate protective finishing jacket is used, apply vapour barrier tape to butt joints, overlapping by at least 25 mm (1 in) each side,

.2 where a separate protective finishing jacket is provided, no additional sealing of the insulation is required.

.3 Indoor installations – Wet Areas:

.1 In Wet Areas, seal Hot piping in accordance with the requirements of chilled water piping and Dual Temperature piping in Wet Areas.

.4 Outdoor installation:

.1 for outdoor piping, apply two coats of breather mastic complete with reinforcing membrane to all lap edges and butt edges, overlapping joint by minimum 50 mm (2 in) each side, and to all insulation that does not have a factory installed jacket.

3.15 Sealing of Insulation – Cold and Dual Temperature Piping Without All Service Jacket

.1 Provide vapour barrier jackets for Cold and Dual Temperature piping insulation which does not have an all service jacket (unfaced) in accordance with Specification section 20 07 11 and/except as specified herein, where piping is installed indoors in non-Wet Areas.

.2 For exposed or concealed Cold Piping and Dual Temperature piping insulation without an integral all service jacket (unfaced), tightly seal pipe-run insulation longitudinal seams and butt joints using of the following methods:

.1 apply two coats of vapour barrier coating with reinforcing membrane over all insulation and pipe fittings, or

.2 cover insulation and pipe fittings, flanges and couplings with sealed PVC jackets as specified herein.

3.16 Sealing of Insulation – Cold and Dual Temperature Piping Without All Service Jacket

.1 Provide vapour barrier seals of Cold and Dual Temperature piping insulation in accordance with Specification section 20 07 11 and/except as specified herein.

.2 For chilled water and Dual Temperature pipe-run insulation with integral all service jackets (ASJ), tightly seal pipe-run insulation longitudinal seams and butt joints in accordance with the following method types and applicable locations in Table 1 which identifies where each method is permitted or required to be used:

.1 METHOD 1 – Vapour Barrier Tape:

(a) with complete coverage of insulation seam and joint with colour-matched 75 mm (3 in.) wide vapour barrier tape,

.2 METHOD 2 – Vapour Barrier Coating:

(a) with two coats of vapor barrier coating complete with reinforcing membrane,

(b) coating to overlap seam or joint by at least 50 mm (2 in.) on each side.

.3 METHOD 3 – Sealed PVC Jacket:

(a) with sealed PVC pipe-run insulation finish cover.

.4 In the following table 1, “Critical Environment” rooms are defined as:

(a) Data and telecommunication rooms,

(b) Medical diagnostic imaging equipment rooms and technical support spaces,

(c) Food production and handling spaces,

(d) Pharmacy dispensing and compounding rooms,

(e) Wet chemistry laboratories,

(f) Animal holding and laboratories,

Table 1
Pipe-Run Insulation Joint Sealing Method
Chilled Water and Dual Temperature Piping
With All Service Jacket

Piping Location	Insulation Location	Method 1 Vapour Barrier Tape	Method 2 Vapour Barrier Coating	Method 3 Sealed PVC Jacket [Note 1]
Mechanical Service Rooms	Exposed or Concealed	No	Permitted	Permitted
Tunnels	Exposed	No	Permitted	Permitted
Vertical Service Spaces (shafts)	Concealed	Permitted	Permitted	Permitted
Trenches	Exposed	No	Permitted	Permitted
	Concealed	No	Permitted	Permitted
Critical Environment rooms	Exposed or Concealed	No	Permitted	Permitted
Below raised floors	Exposed	No	Permitted	Permitted
Wet Area	Concealed	No	No	Required
	Exposed	No	No	Required
All other indoor spaces	Concealed	Permitted	Permitted	Permitted
	Exposed	No	Permitted	Permitted
Outdoors	---	No	Required [Note 2]	Permitted

Notes:
[1] Where PVC finish jacket is also specified.
[2] Required where metal finish jacket is specified.

.5 apply seal to overlap insulation edges and butt joint by minimum 40 mm (1.5 in) each side,

.6 seal the butt end of the insulation with vapour barrier coating, overlapping onto the piping, at every fourth length of piping, but not to exceed 4 m (13 ft) in pipe run length,

.7 seal exposed ends of insulation shoulders at pipe flanges and couplings with vapour barrier coating.

.3 Seal insulation on pipe fittings, flanges and gaskets using Method 1, 2 or 3 in article on sealing of such pipe materials.

3.17 Sealing of Insulation on Pipe Fittings, Flanges and Couplings - Cold and Dual Temperature Piping

.1 Seal insulation on Cold and Dual Temperature pipe fittings, flanges, and couplings by one of the following methods and selected in accordance with Table 2.

.2 METHOD 1 – Vapour Barrier Tape:

.1 with complete coverage of insulation with colour-matched 75 mm (3 in.) wide vapour barrier tape with minimum 40 mm (1-1/2 in.) wide overlaps of each pass and onto adjacent piping,

.3 METHOD 2 – Vapour Barrier Coating:

.1 with two coats of vapor barrier coating complete with reinforcing membrane,

.2 coating to overlap adjacent pipe-run insulation by at least 50 mm (2 in.).

.4 METHOD 3 – Sealed PVC Jacket:

.1 with sealed PVC fitting cover,

.2 for clarity, use of PVC jacket would apply for both concealed and exposed piping, whether or not the pipe-run insulation has a PVC jacket.

.5 Where a conflict occurs between what is permitted in this Table 2 and those of Table 1, the requirements of Table 1 takes precedence.

Table 2
Sealing of Fittings, Flanges and Couplings (F/F/G)
Chilled Water and Dual Temperature Piping

Pipe Size NPS	Pipe Location	F/F/G Insulation Type	Method 1 Vapour Barrier Tape [Note 1]	Method 2 Vapour Barrier Coating	Method 3 Sealed PVC Jacket
≤ 2-1/2	Concealed	Rigid	Permitted	Permitted	Permitted
≥ 3	Concealed	Rigid, Mitered-sections	Permitted	Permitted	Permitted
≥ 3	Concealed	Flexible Blanket or Inserts	No	Permitted	Permitted
All	Exposed	Rigid, Mitered-sections	Permitted [Note 2]	Permitted [Note 3]	Permitted
All	Exposed	Flexible Blanket or Inserts	No	Permitted	Permitted
All	Wet Area, Concealed	All	No	No	Permitted
All	Wet Area, Exposed	All	No	No	Permitted
All	Outdoors	All	No	Required [Note 4]	Permitted

Notes:

[1] Only where vapour barrier tape is permitted to seal pipe-run insulation in accordance with Table 1.

[2] Provide separate finish jacket as specified.

[3] May be final finish as well unless otherwise specified.

[4] Required where metal finish jacket is specified.

[4] For exposed and concealed areas.

3.18 Sealing of Cold and Dual Temperature Piping – Miscellaneous Requirements

.1 Cover mechanical fastener penetrations including staples with colour matched vapour barrier tape, overlapping the fasteners by a minimum of 50 mm (2 in) in all directions.

.2 Where factory lap seams are damaged, apply colour matched vapor barrier tape along the damaged edges.

3.19 Sealing of Insulation Using PVC Jackets ("Sealed PVC Jackets")

.1 Applies where other requirements in this specification section requires sealed PVC jacket to provide a vapour barrier seal.

.2 Seal overlap with PVC manufacturers adhesive sealant by applying a continuous bead of sealant between the PVC jacket layers and between the PVC jacket and adjacent pipe-run insulation or PBC jackets. Roll overlaps to provide tight contact to the adhesive sealant.

.3 In locations other than Critical Environment rooms, Wet Areas, and Outdoors, PVC jackets may be sealed on the overlaps and onto adjacent pipe-run insulation or PVC jackets with 75 mm (3 in.) wide colour-matched vapour barrier tape.

3.20 Insulation Finish Covering

.1 Provide insulation finish coverings selected in accordance with Schedule C at the end of this Specification section and installed in accordance with Specification section 20 07 11 and/except as specified herein.

.2 Self-adhesive weather barrier (SAWB) coverings;

.1 apply SAWB in accordance with manufacturer's instructions,

.2 do not place an overlap within one-eighth pipe diameter on each side of a horizontal pipe top centerline,

.3 for vertical piping, overlap higher layers over lower layers with an overlap not less than 100 mm (4 in).

.3 PVC jackets:

.1 for Hot piping, secure PVC jackets on piping and fittings in accordance manufacturer recommendations,

.2 for Cold and Dual Temperature piping, seal PVC jackets on piping and fittings with either vapour barrier coating/adhesive or by use of colour-matched vapour barrier tape as specified above.

.4 Where concealed Cold and Dual Temperature piping use PVC fitting covers to provide a vapour barrier seal at fittings, flanges and couplings, the use of PVC jackets at these locations does not require application of PVC jackets on piping runs unless otherwise required in Schedule C.

3.21 Mechanical Damage Protection - Indoors

.1 Protect exposed pipe insulation extending up through a floor sleeve at the floor line with 1.2 mm (18 ga) stainless steel jacket approximately 200 mm (8 in) high, secured with rivets and mechanically fastened to the floor with countersunk stainless steel screws.

.1 Exception: where piping is protected by a housekeeping curb or pad of at least 100 mm (4 in.) high and which extends at least 150 mm (6 in.) in front of the insulated pipe.

.2 Where waterproof floor sleeves are required, the floor sleeve may be combined with this requirement.

.3 For clarity, where piping systems use finish covering in accordance with Schedule C of this Specification section, this mechanical damage protection cover is in addition to the specified pipe finish cover.

3.22 Painted Piping

.1 Not applicable.

3.23 Fire Rated Pipe Insulation

.1 Provide two (2) hour rating of type P-9 insulation on piping where shown.

.2 Install insulation in accordance with fire-rated insulation manufacturer's listing requirements. Coordinate with the applicable piping contractor as to any pipe support requirements of the fire-rated insulation installation instructions.

3.24 Standard Details

.1 Refer to Specification section 20 05 29 for illustration of coordination of insulation with pipe supports, unless otherwise shown on drawings.

3.25 Schedules

.1 The following appended schedules form part of this Specification section.

.1	Schedule A1	Hot piping Systems, Insulation Type and Thickness (excluding engine combustion gas exhaust piping)
.2	Schedule A2	Hot Equipment Insulation Type, Thickness, and Coverings For Engine Combustion Gas Exhaust Piping
.3	Schedule B	Cold and Dual Temperature Piping Systems, Insulation Type and Thickness
.4	Schedule C	Piping Insulation Protective Finishes.

Schedule A1
Hot Piping Insulation Type and Thickness
(excluding engine combustion gas exhaust piping)

System	Fluid Nominal Temp. °C (F)	Insulation Type	Nominal Pipe Size (NPS)				
			< 1	1 to 1¼	1½ to 3	4 to <8	≥ 8
			Insulation Thickness, mm (in)				
Steam and Condensate > 860 kPa (125 psi)	177 to 315°C (351 to 600°F)	P-3	115 (4.5) [Note 3]	125 (5) [Note 3]	125 (5)	125 (5)	125 (5)
		P-4	---	---	---	---	125 (5) [Note 1, 2]
		P-7	200 (8) [Note 3]	200 (8) [Note 3]	200 (8)	175 (7)	175 (7)
Steam and Condensate > 100 kPa (15 psi) and ≤ 860 kPa (125 psi) Boiler Feed Water	122 to 176 (251 to 350)	P-1 P-3	80 (3) [Note 3]	100 (4) [Note 3]	115 (4.5)	115 (4.5)	115 (4.5)
		P-2 P-4	---	---	---	---	150 (6) [Note 1, 2]
		P-7	125 (5) [Note 3]	175 (7) [Note 3]	175 (7)	175 (7)	150 (6)
Safety Relief Piping	122 to 176 (251 to 350)	P-1 P-3	40 (1½)	40 (1½)	40 (1½)	40 (1½)	40 (1½)
Steam and Condensate ≤ 100 kPa (15 psi) High temperature hot water heating	94 to 121 (201 to 250)	P-1 P-3	65 (2.5) [Note 3]	65 (2.5) [Note 3]	80 (3)	80 (3)	90 (3½)
		P-2 P-4	---	---	---	---	100 (4) [Note 1, 2]
		P-7	125 (5) [Note 3]	100 (4) [Note 3]	125 (5)	125 (5)	125 (5)
Hot Water Heating Glycol Heating Pumped Condensate	61 to 93 (141 to 200)	P-1 P-3	40 (1½) [Note 3]	40 (1½) [Note 3]	50 (2)	50 (2)	50 (2)
		P-2 P-4	---	---	---	---	65 (2½) [Note 1, 2]
		P-7	65 (2½) [Note 3]	65 (2½) [Note 3]	65 (2½)	65 (2½)	65 (2½)
Hot Water Heating (Buried)	61 to 93 (141 to 200)	P-5	50 (2) [Note 3]	50 (2) [Note 3]	65 (2.5)	65 (2.5)	65 (2.5)

…continued on next page

Schedule A1 (Continued)

Hot Piping Insulation Type and Thickness
(excluding engine combustion gas exhaust piping)

System	Fluid Service Temperature °C (F)	Insulation Type	Nominal Pipe Size (NPS)				
			< 1	1 to 1¼	1½ to 3	4 to <8	≥ 8
			Insulation Thickness, mm (in)				
Pure Water (with heat sanitization)	25 to 93 (77 to 200)	P-1 P-3	25 (1)	25 (1)	25 (1)	25 (1)	25 (1)
Low Temperature Hot Water Heating Low Temperature Glycol Heating	41 to 60 (105 to 140)	P-1 P-3	25 (1)	25 (1)	40 (1½)	40 (1½)	40 (1½)
Domestic Hot Water Domestic Hot Water Recirculation Not-Potable Hot Water Non-Portable Hot Water Recirculation	41 to 60 (105 to 140)	P-1 P-3	25 (1)	25 (1)	40 (1 ½)	40 (1 ½)	40 (1 ½)
Condenser Water (outdoors)	16.5 to 40 (61 to 104)	P-3 P-4 P-5	40 (1½)	40 (1½)	40 (1½)	40 (1½)	40 (1½)
Fire protection Sprinkler piping and valves, Fire protection Standpipe piping and valves [Note 4]	4 to 40 (50 to 104)	P-1 P-3	25 (1)	25 (1)	40 (1 ½)	40 (1 ½)	40 (1 ½)

Notes:
[1] For NPS 14 and larger.
[2] Install in two layers of insulation to make up total thickness.
[3] For piping NPS 1-1/4 and smaller located in partitions within conditioned spaces, insulation thickness may be reduced by up to 25 mm, but final thickness shall not be less than 25 mm.
[4] For heat-traced fire protection piping only, including drum drip assemblies on dry systems.

Schedule A2
Hot Equipment Insulation Type, Thickness, and Coverings
For Engine Combustion Gas Exhaust Piping

Equipment Description	Exhaust Gas Service Temperature °C (°F)	1st Layer Type x Thickness mm (in)	2nd Layer Type x Thickness mm (in)	Protective Finishing Covering, Exposed Piping [Note 1]
Natural Gas Engine combustion gas exhaust piping	≤ 700 (≤ 1292)	P-10 50 (2)	P-3 90 (3.5)	Fabric
		P-10 50 (2)	P-3 150 (6) [Note 2]	Stainless Steel
Diesel Engine combustion gas exhaust piping	≤ 540 (≤ 1000)	P-10 25 (1)	P-3 50 (2)	Fabric
		P-10 50 (2)	P-3 90 (3.5)	Stainless Steel
		P-7 40 (1.5)	P-7 50 (2)	Fabric
		P-7 75 (3)	P-7 90 (3.5)	Stainless Steel

Notes:
[1] For exposed piping located indoors. See Schedule C for other locations.
[2] Made up of two equal thickness layers with a total thickness of the indicated value.

Schedule B
Cold and Dual Temperature Piping Insulation Type and Thickness

System	Fluid Service Temperature °C (°F)	Insulation Type	Nominal Pipe Size (NPS)				
			< 1	1 to 1¼	1½ to 3	4 to <8	≥ 8
			Insulation Thickness, mm (in)				
Dual Temperature Heating/Cooling	4 to 93 (39 to 200)	P-1 P-3	40 (1½)	40 (1½)	50 (2)	50 (2)	50 (2)
		P-2	---	---	---	---	65 (2½) [Note 1, 2]
Domestic Cold Water Non-potable Water	4 to 16 (39 to 61)	P-1 P-3	25 (1)	25 (1)	40 (1 ½)	40 (1 ½)	40 (1 ½)
Storm and Sanitary Drainage	4 to 16 (39 to 61)	P-1	25 (1)	25 (1)	25 (1)	25 (1)	25 (1)
		P-6	15 (1/2)	20 (3/4)	25 (1) [Note 3]	---	---
Equipment Drains	4 to 16 (39 to 61)	P-6	15 (1/2)	20 (3/4)	25 (1) [Note 3	---	---
Chilled Water, Glycol Heat Recovery	4 to 16 (39 to 61)	P-1 P-3 P-5	25 (1)	25 (1)	40 (1 ½)	40 (1 ½)	50 (2)
Chilled Water (Outdoors)	4 to 16 (39 to 61)	P-3	50 (2)	50 (2)	50 (2)	75 (3)	75 (3)
Chilled Water (Buried)	4 to 16 (39 to 61)	P-5	25 (1)	25 (1)	40 (1 ½)	40 (1 ½)	40 (1 ½)
Refrigerant Suction	< 4 (< 39)	P-6	25 (1)	25 (1)	25 (1) [Note 3]	---	---
MRI Quench Vent	-268 (-450)	P-3 (inner layer)	---	---	---	25 (1)	25 (1)
		P-6 (outer layer)	---	---	---	25 (1)	25 (1)

Notes:
[1] For NPS 14 and larger.
[2] Install in two layers of insulation to make up total thickness.
[3] Do not use on pipe size NPS 2-1/2 to 3.

Schedule C
Piping Insulation Finish Coverings

Location	Exposed/ Concealed	Piping System	Finish Covering
Indoors	Concealed	MRI quench vent piping	SAWB
		Engine combustion gas exhaust piping	Metal
		Piping with insulation types P-4, P-5, P-7, P-10	SAWB or PVC
		All other piping	None (factory jacket only)
	Exposed	Steam 345 kPa (50 psig) and over	[Fabric] [Metal]
		Wet Areas	PVC
		Piping (insulation) which will be painted	Fabric
		Fire Protection Piping	PVC (red in colour)
		Engine combustion gas exhaust piping	Refer to Schedule A2
		All other piping	PVC
Outdoors	Any	Engine combustion gas exhaust piping	Stainless Steel
		MRI quench vent piping	Stainless Steel
		All other piping	Stainless Steel

END OF SECTION

START-UP AND PERFORMANCE TESTING REPORTING
20 08 01

1 GENERAL

1.1 Scope

.1 Provide integrated reporting of start-up and performance testing of mechanical equipment and systems.

1.2 Related Sections

.1 Without limiting the scope of work or applicability of other specification sections, the work under this section directly integrates with or refers to the following specification sections:

.1 23 05 93.13 Testing Adjusting and Balancing for HVAC

1.3 Coordination

.1 Coordinate the work of testing companies;

.1 schedule sufficient time so that testing and balancing can be completed before occupancy begins and coordinate with trades involved,

.2 keep testing and balancing firm informed of any major changes made during construction and furnish same with a set of project drawings and reviewed Shop Drawings,

.3 furnish balancing devices, test connections access openings, balancing probe inlets and plugs,

.4 clean and pre-run all equipment, filters, etc. and place all heating, ventilating and air conditioning systems into full operation and continue same during each working day of testing and balancing,

.5 provide labour from pertinent mechanical trades and tools, equipment and materials to make equipment and system alterations and adjustments, as required including control adjustments,

.6 Building Automation System technical representative to operate the BAS during air and water balancing testing,

.7 where required in applicable Specification sections, refrigeration machine manufacturer service representative conducts performance testing of the refrigeration equipment, and Testing and Balancing contractor to witnesses and records all test results.

.8 where required in applicable Specification sections, fuel-fired heating equipment manufacturer service representative, or other qualified service company technical representative, conducts performance testing of heating equipment and Testing and Balancing contractor to witnesses and records all test results.

.2 Be responsible for systems constructed, installed and adjusted to provide optimum performance as required by design intent. Perform any re-adjusting required as the result of spot checks by the Consultant at no increase in Contract Price.

1.4 Submittals

.1 Submit a report format template a minimum 14 days prior to start of air and water balancing on-site.

.1 submit proposed format of initial report,

.2 include a complete list of instruments and tests for which they are to be used as they relate to this project, including date of last calibration

2 PRODUCTS

2.1 Not applicable.

3 REPORT FORMAT

3.1 General

.1 Include the following information for each test report:

- .1 Owner Name,
- .2 Project Name,
- .3 Contractor Name,
- .4 Consultant Name,
- .5 Name of Test Report,
- .6 Name and signature of the person submitting the report,
- .7 Date of report.

.2 Submit two (2) copies of test reports in hardcopy form in 3-“D” ring binders, indexed for each type of report, separately bound from the Operations and Maintenance manuals. Provide two (3) copies of the same reports in Adobe Acrobat version 7 PDF forma.

4 START-UP AND PERFORMANCE REPORTS

4.1 Required reports

.1 Provide the following Start-Up and Performance Testing reports:

- .1 Equipment start-up report,
- .2 Authorities inspection reports,
- .3 Air and water balancing report,
- .4 Controls / BMS operation report,

4.2 Equipment Start-up Report

.1 Provide a test report in spreadsheet format which summarizes the following data for each piece of equipment which is powered or has automatic controls:

- .1 equipment ID and name,
- .2 motor insulation megger test - result and initialed by contractor,
- .3 motor rotation (bump test) - result and initialed by contractor,
- .4 equipment start-up report - status and initialed by contractor,
- .5 manufacturer Start-Up report – status and initialed by contractor,
- .6 test completion date.

.2 Provide a test report in spreadsheet format which summarizes the following data for testing of piping systems, organized by each piping system:

- .1 system name,
- .2 system limits (if system is not tested in its entirety),

.3 type of test (pneumatic, hydrostatic),

.4 pressure at start of test,

.5 pressure at end of test,

.6 duration of test,

.7 contractor dated and initialed,

.8 expansion tank initial pressure,

.9 expansion tank final pressure,

.10 backflow preventers have been tested - status and initialed by contractor,

.11 pressure relief valves installed – record setpoint and initialed by contractor.

.3 Provide a test report in spreadsheet format which summarizes the following data for testing of ductwork systems, organized by each ductwork system:

.1 system name,

.2 system limits (if system is not tested in its entirety),

.3 test pressure,

.4 duration of test,

.5 seal Class,

.6 tested duct surface area,

.7 allowable airflow leakage rate,

.8 estimated leakage rate,

.9 contractor dated and initialed.

.4 Equipment/System Start-Up Test Report:

.1 Provide a separate start-up report for each piece of the following equipment. The SMACNA “Systems Ready to Balance Check List”, where applicable, may be used for this report.

(a) HVAC units,

(b) duct Systems,

(c) pumps,

(d) boilers, and boiler auxiliaries,

(e) heat exchangers,

(f) cooling towers,

(g) air compressors,

(h) refrigeration equipment,

(i) hydronic piping systems,

(j) steam piping systems,

(k) sprinkler systems (to NFPA 13),

(l) standpipe systems (to NFPA 14).

.5 Manufacturer’s Start-Up Test:

.1 Provide a separate start-up report for each piece of the following equipment, utilizing the manufacturer’s start-up check list. This report may be prepared by the manufacturer’s service representative:

(a) chemical water treatment - pipe cleaning,

(b) chemical water treatment - passivating and inhibition,
(c) refrigeration equipment,
(d) packaged AC equipment,
(e) heating boilers,
(f) steam boilers,
(g) deaerators,
(h) packaged humidity steam generators,
(i) domestic hot water heaters,
(j) air compressors,
(k) cooling towers,
(l) adjustable frequency drives,
(m) Building Automation Systems.

4.3 Authorities Inspection Reports

.1 Submit copies of authorities-having-jurisdiction inspection and test reports, including:

.1 plumbing and drainage municipal inspector reports,

.2 AHJ for boiler, pressure vessels and pressure piping reports,

.3 AHJ for electrical safety inspection reports and, if applicable, field certification reports.

.2 Where an AHJ inspects the work but does not issue an inspection report, provide a signed and dated written declaration of the name of the AHJ inspector, the date of their inspection, what they inspected, and any comments they provided orally or in writing (other than an inspection report).

4.4 Air and Water Balancing Reports

.1 Provide air and water balancing reports in accordance with Specification section 20 08 05.

5 REPORT SUBMISSIONS

5.1 Deficiencies

.1 Immediately report to Consultant, any deficiencies in the systems or equipment performance resulting in design requirements being unobtainable.

5.2 Draft Report

.1 On completion of the start-up, testing, adjusting and balancing of all systems, submit to the Consultant, two (2) typewritten copies of a full report on all tests, adjustments, and balancing performed.

.2 Attachments including systems schematics with numbered terminals for referring to data above.

5.3 Spot Checks

.1 After review of the draft report by the Consultant, Consultant has the right to require a retest of up to 10% of all air and water balancing measurements in locations as directed by the Consultant, at no cost extra to the contract.

.2 If results indicate unusual testing inaccuracy, omissions, or incomplete balancing/adjustment, in the opinion of the Consultant, re-balance entire affected system(s) at no increase in Contract Price.

5.4 Interim Report

.1 After completion of any retesting described above, submit three (1) typewritten copies of the interim report bound in a 3-hole “D” style binder, and two (2) removable drives (thumb drive) of the report in PDF format.

.2 This report is required to obtain Substantial Performance of the Contract.

5.5 Final Report

.1 Submit to Consultant the final report following completion of alternate season testing and balancing. Submit two (2) typewritten copies bound in a 3-hole “D” style binder,, and two (2) removable drives (thumb drive) of the report in PDF format.

5.6 Acceptance

.1 The Substantial Performance of the Mechanical Work will be considered reached when the interim Start-Up and Performance Testing report is reviewed by the Consultant and in the opinion of the Consultant all systems have been satisfactorily installed, operated tested, balanced, and adjusted to meet the specified and intended performance, except for deferred seasonal-dependent work or other deferred work agreed by the Owner.

.2 The substantial performance is not dependent upon alternate season testing.

.3 The total performance of the Mechanical Subcontract (Contract) will not be considered reached until the alternate season testing and balancing and any other deferred Work is completed and the final report submitted and reviewed by the Consultant.

END OF SECTION

TESTING OF INTEGRATED MECHANICAL FIRE PROTECTION AND LIFE SAFETY SYSTEMS
20 08 11

1 GENERAL

1.1 Scope

.1 Provide testing of integrated fire protection and life safety systems and related equipment provided under Division 20 to 25 with those provided under other Divisions of the Work, in accordance with specification section 01 75 11.

.2 This specification is limited to testing of the interconnections between fire protection and/or life safety systems. Refer to separate technical specification sections for the individual testing and commissioning requirements for those systems.

1.2 Related Sections

.1 Without limiting the scope of work or applicability of other specification sections, the work under this section directly integrates with or refers to the following specification sections:

.1 Section 01 75 11 Testing of Integrated Fire Protection and Life Safety Systems

1.3 Definitions and Abbreviations

.1 Refer to section 01 75 11.

1.4 Applicable Codes and Standards

.1 Installation codes and standards:

.1 CAN/ULC-S1001 Integrated Systems Testing of Fire Protection and Life Safety Systems

1.5 Qualified Tradesperson

.1 Refer to section 01 75 11.

2 PRODUCTS

.1 Not used.

3 EXECUTION

3.1 General Requirements

.1 Conduct complete and thorough testing and documentation of the systems interface and integration between various FPLS systems provided under Divisions 20 to 25 and those provided under other Divisions of the Work.

.2 Include all labor and material as required to participate in and implement the integrated FPLS testing process for equipment and systems provided under Division 20 to 25.

3.2 Integrated Test Plan and Procedures - Development

.1 Participate in the development of the integrated FPLS test plan and procedures in accordance with the requirements of specification section 01 75 11.

.2 Supply manufacturer’s operating and testing instructions to the ITC prior to the development of the integration FPLS test plan.

3.3 Integration Test Plan – Implementation

.1 Complete related FPLS system testing in accordance with the applicable technical specification sections of Divisions 20 to 25, prior to implementation of integrated FPLS testing. Where testing of such systems inherently test the FPLS system interconnection(s), such testing is not required to be duplicated for the integrated FPLS testing provided the results of the integration test are recorded in accordance with the requirements of the integrated FPLS test plan.

.2 Prior to implementing any integrated FPLS test,

.1 provide written confirmation from each trade contractor under Divisions 20 to 25 of the Work, that their respective FPLS related equipment or systems, or parts thereof, have been installed in accordance with the design and are ready for integrated FPLS testing,

.2 provide test verification reports from the organization that verified the installation of any FPLS system as required by referenced codes or standards, such as NFPA or ULC.

.3 provide a copy of inspection reports from an authority having jurisdiction governing a FPLS system.

.3 Coordinate with the ITC and provide all necessary resources to implement the integrated FPLS test plan.

3.4 Final Test Results Report

.1 The final test report will be prepared by the ITC.

END OF SECTION

Master revised: 27 January 2022

COMMON WORK RESULTS FOR FIRE SUPPRESSION
21 05 01

1.1 GENERAL

1.2 Scope

.1 Fire suppression work includes;

- .1 Commissioning of fire suppression systems,
- .2 Standpipe & Hose Systems,
- .3 Fire Extinguishers,
- .4 Wet Pipe Sprinkler System,
- .5 Dry Pipe Sprinkler System,
- .6 Pre-action Sprinkler System,
- .7 Fine Water Spray System,
- .8 Foam Water Suppression System,
- .9 Carbon Dioxide Extinguishing Systems,
- .10 Clean Agent Suppression Systems,
- .11 Packaged Fire Pump,
- .12 Fire-Suppression Water Storage.

.2 Piping materials specified herein are limited to design pressures not exceeding 2000 kPa (300 psi).

1.3 Related Sections

.1 Without limiting the scope of work or applicability of other specification sections, the work under this section directly integrates with or refers to the following specification sections:

- .1 20 05 24 Welding and Brazing
- .2 20 05 25 Excavation and Backfilling
- .3 20 05 29 Common Hanger and Support Requirements for Piping
- .4 21 05 23 General-Duty Valves for Water-Based Fire-Suppression Piping
- .5 22 05 19 Utility Water Meters

1.4 Applicable Codes and Standards

.1 Installation codes and standards:

- .1 Fire suppression work to conform to standards of the National Fire Prevention Association (NFPA) and relevant sections of the provincial Building Code applicable to the location of the Work.
- .2 CSA B64.10 Selection and Installation of Backflow Preventers / Maintenance and Field Testing of Backflow Preventers

.2 Product standards:

- .1 ANSI B1.20.1 Pipe Threads, General Purpose (inch)
- .2 ASME B16.1 Cast Iron Pipe Flanges And Flanged Fittings
- .3 ASME B16.3 Malleable Iron Threaded Fittings.

.4	ASME B16.4	Cast Iron Threaded Fittings, Class 125 and 250
.5	ASME B16.5	Pipe Flanges and Flanged Fittings
.6	ASME B16.9	Factory Made Wrought Steel Buttwelding Fittings
.7	ASME B16.11	Forged Steel Fittings, Socket-Welding and Threaded
.8	ASME B16.15	Cast Bronze Threaded Fittings, Classes 125 and 250
.9	ASME B16.18	Cast Copper Alloy Solder Joint Pressure Fittings
.10	ASME B16.21	Nonmetallic Flat Gaskets for Pipe Flanges.
.11	ASME B16.22	Wrought Copper and Copper Alloy Solder Joint Pressure Fittings
.12	ASME B16.24	Cast Copper Alloy Pipe Flanges and Flanged Fittings; Class 150, 300, 400, 600, 900, 1500, & 2500.
.13	ASME B16.39	Malleable Iron Threaded Pipe Unions: Classes 150, 250 and 300.
.14	ASME B18.2.1	Square and Hex Bolts and Screws,
.15	ASME B18.2.2	Square and Hex Nuts
.16	ASTM A53	Standard Specification for Pipe, Steel, Black and Hot-Dipped, Zinc-Coated, Welded and Seamless
.17	ASTM A135	Standard Specification for Electric-Resistance-Welded Steel Pipe
.18	ASTM A194	Standard Specification for Carbon and Alloy Steel Nuts and Bolts for High-Pressure or High-Temperature Service, or Both.
.19	ASTM A795	Specification for Black and Hot-Dipped Zinc-Coated (Galvanized) Welded and Seamless Steel Pipe for Fire suppression Use
.20	CSA B64.4	Backflow Preventers, Reduced Pressure Principle Type (RP)
.21	ULC-B65.5	Backflow Preventers, Double Check Valve Type (DCVA)
.22	CSA B242	Groove and Shoulder Type Mechanical Pipe Couplings
.23	UL 203	Pipe Hanger Equipment for Fire suppression Service
.24	UL 393	Indicting Pressure Gauges for Fire Protection Service
.25	UL 1468	Standard for Direct Acting Pressure Reducing and Pressure Restricting Valves
.26	UL 1739	Standard for Pilot-Operated Pressure-Control Valves for Fire-Protection Service
.27	ULC/ORD-C203	Pipe Hanger Equipment for Fire suppression Service
.28	ULC/ORD-C213	Rubber Gasketed Fittings for Fire suppression Service
.29	ULC/ORD-C213B	Welded Outlet Fittings
.30	ULC-S548	Alarm Initiating and Supervisory Devices for Water Type Extinguishing Systems

1.5 Qualified Tradesmen

.1 Work to be performed by qualified and recognized firm with an established reputation in this field, using tradesmen holding certificates of competency.

1.6 Water Supply Test Results

.1 Provide water flow test on municipal water service in proximity to building connection, in accordance with NFPA 14 and NFPA 291. Flow test must be conducted within one (1) year prior to system design. Submit record of test including static pressure, and residual pressure and flow.

.1 Obtain municipal approval and pay fees associated with testing.

1.7 Design Criteria

.1 Pressure piping design conditions and applicable codes are specified herein. Where different operating and design pressures are shown on drawings, the drawings govern.

.2 System design criteria are described in the relevant Division 21 system specifications.

.3 Where a “Class” is indicated on drawings, this refers to Class as defined in the applicable ASME B16 series of product standards. Notwithstanding the maximum allowable pressure-temperature ratings defined for each ASME Class designation, the applicable Class designation by floor level shown on the drawings may identify lower maximum allowable design pressures applicable to any Class rating.

2 PRODUCTS

2.1 Carbon Steel Pipe

.1 Piping materials:

.1 to ASTM A53 Grade B, seamless or electric-resistant-welded (ERW),

.2 to ASTM A135 Grade B, ERW,

.3 to ASTM A795. Grade B, ERW.

.2 Pipe wall thickness: as specified in each applicable fire suppression specification section.

.3 Piping to be hot-dipped galvanized where required in each system specification section in Division 21.

2.2 Steel Pipe Joints and Fittings

.1 Threaded fittings:

.1 end connections: NPT thread to ANSI B1.20.1.

.2 fittings:

(a) Class 125 cast iron to ASME B16.4,

(b) Class 150 and Class 300, malleable iron to ASME B16.3.

.3 unions: Class 150 and Class 300, malleable iron body with ground joint and bronze face to ASME B16.39.

.4 threaded joint compound: pulverized lead paste or Teflon pipe tape sealant.

Standard of Acceptance

- Masters Pro-Dope
- Masters Orange or White Tape.

.2 Welding fittings:

.1 butt weld fittings:

(a) forged to ASME B16.9,

(b) wall thickness to match pipe,

(c) long radius elbows.

.2 welding outlet fittings:

(a) forged to ASTM A105,

(b) dimensions and pressure ratings to MSS SP-97, Standard Class for buttwelding branch connection and Class 3000 for threaded or socket welded branch connection,

(c) NPT ends to ASME B1.20.1.

.3 special welding outlet fittings for fire protection:

(a) weld-on branch outlet fittings for groove-end and threaded-end connections for fire protection services,

(b) listed to ULC/ORD-C213B for fire protection service,

(c) forged from materials meeting ASTM A53 Gr. B.,

(d) pressure rating: 2067 kPa (300 psi) for fire protection water,

.4 socket welded fittings:

(a) forged to ASTM A105,

(b) dimensions and pressure ratings to ASME B16.11, Class 3000.

.5 half couplings:

(a) forged carbon steel to ASTM A105,

(b) dimensions and pressure rating to ASME B16.11, Class 3000 socket weld or threaded ends,

(c) NPT ends to ASME B1.20.1.

.3 Flanges:

.1 flat-faced cast iron to ANSI B16.1, Class 125.

.2 raised-face forged carbon steel to ASME B16.5, Class 150 and Class 300, weld neck with wall thickness to match pipe, or slip on type.

.3 studs, bolts and nuts to ANSI B18.2.1, ANSI 18.2.2 and ASTM A194, “high strength” type.

.4 gaskets:

(a) styrene butadiene rubber sheet to ANSI B16.21.

(b) 1.6 mm (1/16 in) thick.

Standard of Acceptance

- Chesterton - fig. 100
- Beldam

.4 Grooved fittings and couplings:

.1 couplings listed to CSA B242,

.2 listed for combination of fittings, couplings and gaskets to ULC/ORD-C213,

.3 rolled or cut grooved (depending on pipe wall thickness), standard or rigid style,

.4 fittings and couplings NPS 2 to 12: malleable iron to ASTM A47 or ductile iron to ASTM A536,

.5 gaskets: dry lubricated EPDM,

.6 design temperature rating: -34°C (-30°F) to 110°C (230°F),

(a) design pressure raring: 2400 kPa (350 psig),

Standard of Acceptance

- Victaulic

- Gruvlok

2.3 Multi-axis Flexible Pipe Loops

.1 Application:

.1 for steel piping and copper tube systems,

.2 two or three element flexible piping loops with flexible metallic hose and rigid elbow fittings, for thermal expansion and/or for use at crossing building seismic or movement control joints, and designed to restraint pressure thrusts across the pipe loop,

.3 listed to ULC/ORD-C213,

.4 size:

(a) copper tube: NPS ½ to NPS 3

(b) steel pipe: NPS ¾ to NPS 4.

.2 Multi-axis displacement movement: as shown on drawings.

.3 Construction:

.1 metallic hose elements for copper tubing:

(a) inner hose: corrugated bronze hose,

(b) outer jacket: braided bronze wire mesh, to restrain hose from elongation and to limit hose movement,

.2 metallic hose elements for steel piping:

(a) inner hose: corrugated T316 or T321 stainless steel,

(b) outer jacket: braided T300 series stainless steel wire mesh, to restrain hose from elongation and to limit hose movement,

.3 rigid fittings; schedule 40 carbon steel pipe, or bronze fittings as applicable,

.4 pipe end connections:

(a) copper tube: female sweat or grooved,

(b) steel pipe: flanged, weld-end, or grooved.

.5 working pressure: 1030 kPa (150 psig) at up to 121°C (250°F),

.6 field pressure test: capable of being hydrostatically pressure tested at not less than 150% of unit MAWP, at a test temperature of 21°C (70°F),

.7 factory tested to 1 ½ times maximum working pressure,

.8 CRN to CSA B51.

Standard of Acceptance

- Hyspan - fig. 4500 V-Flex
- Metraflex - fig. Metraloop
- Flex-Hose Co. - fig. Tri-Flex Loop

2.4 Pipe Supports

.1 Pipe supports and hangers to conform to specification section 20 05 29 except/and as specified herein.

.2 Pipe hangers and supports to be listed ULC/ORD-C203 or UL 203 for fire suppression service, except where such listing requirement is excluded under applicable NFPA standards.

2.5 Backflow Preventers

.1 Construction:

.1 type:

(a) reduced pressure principle backflow preventers, listed to CSA B64.4,

(b) double check valve backflow preventers, listed to CSA B64.5.

.2 required MCPR: 1200 kPa (175 psi) at 40°C (104°F).

.3 bronze body, or cast iron body with interior surfaces finishes with a corrosion inhibitor coating,

.4 sidestream waterflow detector meter.

.1 isolation valves:

(a) NPS 2 and smaller: ball valves,

(b) NPS 2-1/2 and larger: gate or butterfly valves.

.2 airgap relief drain fitting for reduced pressure backflow preventers.

.3 listed to ULC/ORD-C312.

.4 listed to FM Approval class 1221 for backflow preventers NPS 2-1/2 and larger.

.5 listed to NSF/ANSI 61-G, or to NSF/ANSI 61 and NSF/ANSI 372.

.2 Reduced pressure principle type:

.1 NPS 2 and under:

Standard of Acceptance

° Watts - fig. LF909
° Apollo - fig. 40-200 series

.2 NPS 2-1/2 to NPS 12:

Standard of Acceptance

° Watts - fig. LF957RPDA
° Apollo - fig. 4ALF-700 LBF series

.3 Double check valve type:

.1 NPS 2 and under:

Standard of Acceptance

° Watts - fig. 007M1DCDA
° Apollo - fig. 4ALF-600 Slo Cloz series

.2 NPS 2-1/2 to NPS 12:

Standard of Acceptance

° Watts - fig. LF757DCDA
° Apollo - fig. 4ALF-600 LBF series

2.6 Pressure Reducing Valves

.1 Standard pressure reducing valves:

.1 globe-style, direct-acting type listed to UL 1468 or hydraulically pilot-operated type listed to UL 1739, and FM approved for fire protection service.

.2 diaphragm-actuated globe or angle main valve, single resilient seated, with epoxy, Kynar, or ECTFE internal coating,

.3 ductile iron body, with interior and exterior epoxy coated surfaces,

.4 all stainless steel pilot valve assembly, including sensing tubing, fittings, and pilot valve,

.5 normally open, direct acting pilot regulator,

.6 adjustable outlet pressure,

.7 with position indication,

.8 fully serviceable without removing valve body from the pipeline,

.9 inlet and outlet pressure gauges 0 – 2000 kPa (0-300 psi),

.10 maximum inlet pressure: 2060 kPa (300 psi),

.11 pressure control range: 350 to 1140 kPa (50 to 165 psi),

Standard of Acceptance

- Cla-Val - fig. 90-21
- Watts - fig. M115F
- Zurn - fig. ZW209FP

.2 Low-Flow range pressure reducing valves:

.1 As specified above for standard valves and as follows.

.2 Flow rate range: 0.3 to 5.0 L/s (4.7 to 80 gpm) at a pressure drop not exceeding 70 kPa (10 psi) at the upper end of the flow range.

Standard of Acceptance

- Zurn - fig. ZW209FP

2.7 Fire Department Connection

.1 [Bronze][Chrome plated], [exposed flush mounted][recessed] dual inlet fire department connection,

.2 Double clapper valve with threaded metal caps and chains,

.3 Identifying cast bronze plate sign, embossed with words (as applicable to the system):

.1 "SPRINKLERS, FIRE DEPARTMENT CONNECTION"

.2 “STANDPIPE, FIRE DEPARTMENT CONNECTION”.

.4 Thread specifications compatible with local fire department standard.

.5 Include Underwriters' type check valve and ¾ NPS automatic ball drip in line.

Standard of Acceptance

- National Fire Equipment - fig. 229 (flush mounted)
- National Fire Equipment - fig. A101/102 series.
- Manufacturers as listed above for sprinkler heads

.6 For recessed connections, cabinet and door provided under architectural trades.

2.8 Ancillary Devices and Accessories

.1 Pressure gauges:

.1 listed to UL 393 and FM approved.